SECTION EC
ENGINE CONTROL SYSTEM

CONTENTS

INDEX FOR DTC **8**
DTC No. Index 8
Alphabetical Index 11
PRECAUTIONS **14**
Precautions for Supplemental Restraint System (SRS) “AIR BAG” and “SEAT BELT PRE-TENSIONER” 14
On Board Diagnostic (OBD) System of Engine and A/T 14
Precaution 14
Wiring Diagrams and Trouble Diagnosis 17
PREPARATION **18**
Special Service Tools 18
Commercial Service Tools 19
ENGINE CONTROL SYSTEM **21**
System Diagram 21
Multiport Fuel Injection (MFI) System 22
Electronic Ignition (EI) System 24
Fuel Cut Control (at No Load and High Engine Speed) 25
AIR CONDITIONING CUT CONTROL **26**
Input/Output Signal Chart 26
AUTOMATIC SPEED CONTROL DEVICE (ASCD) **27**
System Description 27
Component Description 28
CAN COMMUNICATION **29**
System Description 29
EVAPORATIVE EMISSION SYSTEM **30**
Description 30
Component Inspection 33
Removal and Installation 34
How to Detect Fuel Vapor Leakage 34
ON BOARD REFUELING VAPOR RECOVERY (ORVR) **37**
System Description 37
Diagnostic Procedure 38
Component Inspection 41
POSITIVE CRANKCASE VENTILATION **44**
Description 44
Component Inspection 44
NVIS (NISSAN VEHICLE IMMOBILIZER SYSTEM-NATS) **46**
Description 46
ON BOARD DIAGNOSTIC (OBD) SYSTEM **47**
Introduction 47
Two Trip Detection Logic 47
Emission-Related Diagnostic Information 48
Malfunction Indicator Lamp (MIL) 61
OBD System Operation Chart 65
BASIC SERVICE PROCEDURE **70**
Basic Inspection 70
Idle Speed and Ignition Timing Check 75
Idle Mixture Ratio Adjustment 77
VIN Registration 87
Accelerator Pedal Released Position Learning 88
Throttle Valve Closed Position Learning 88
Idle Air Volume Learning 88
Fuel Pressure Check 90
TROUBLE DIAGNOSIS **94**
Trouble Diagnosis Introduction 94
DTC Inspection Priority Chart 100
Fail-Safe Chart 102
Symptom Matrix Chart 103
Engine Control Component Parts Location 107
Vacuum Hose Drawing 112
Circuit Diagram 113
ECM Harness Connector Terminal Layout 115
ECM Terminals and Reference Value 115
CONSULT-II Function (ENGINE) 123
Generic Scan Tool (GST) Function 135
CONSULT-II Reference Value in Data Monitor 137
Major Sensor Reference Graph in Data Monitor Mode 141
TROUBLE DIAGNOSIS - SPECIFICATION VALUE **143**
Description 143
Testing Condition 143
Inspection Procedure 143
Diagnostic Procedure 144
TROUBLE DIAGNOSIS FOR INTERMITTENT INCIDENT **153**

Description 153
Diagnostic Procedure 153
POWER SUPPLY AND GROUND CIRCUIT 154
Wiring Diagram 154
Diagnostic Procedure 155
Component Inspection 161
Ground Inspection 161
DTC U1000, U1001 CAN COMMUNICATION LINE 162
Description 162
On Board Diagnosis Logic 162
DTC Confirmation Procedure 162
Wiring Diagram 163
Diagnostic Procedure 164
DTC P0011 IVT CONTROL 165
Description 165
CONSULT-II Reference Value in Data Monitor Mode .165
On Board Diagnosis Logic 166
DTC Confirmation Procedure 166
Diagnostic Procedure 167
Component Inspection 168
Removal and Installation 168
DTC P0031, P0032 HO2S1 HEATER 169
Description 169
CONSULT-II Reference Value in Data Monitor Mode .169
On Board Diagnosis Logic 169
DTC Confirmation Procedure 169
Wiring Diagram 171
Diagnostic Procedure 172
Component Inspection 174
Removal and Installation 174
DTC P0037, P0038 HO2S2 HEATER 175
Description 175
CONSULT-II Reference Value in Data Monitor Mode .175
On Board Diagnosis Logic 175
DTC Confirmation Procedure 175
Wiring Diagram 177
Diagnostic Procedure 178
Component Inspection 180
Removal and Installation 180
DTC P0101 MAF SENSOR 181
Component Description 181
CONSULT-II Reference Value in Data Monitor Mode .181
On Board Diagnosis Logic 181
DTC Confirmation Procedure 181
Overall Function Check 183
Wiring Diagram 184
Diagnostic Procedure 185
Component Inspection 188
Removal and Installation 189
DTC P0102, P0103 MAF SENSOR 190
Component Description 190
CONSULT-II Reference Value in Data Monitor Mode .190
On Board Diagnosis Logic 190
DTC Confirmation Procedure 190
Wiring Diagram 192
Diagnostic Procedure 193
Component Inspection 196
Removal and Installation 197
DTC P0112, P0113 IAT SENSOR 198
Component Description 198
On Board Diagnosis Logic 198
DTC Confirmation Procedure 198
Wiring Diagram 200
Diagnostic Procedure 201
Component Inspection 203
Removal and Installation 203
DTC P0117, P0118 ECT SENSOR 204
Component Description 204
On Board Diagnosis Logic 204
DTC Confirmation Procedure 205
Wiring Diagram 206
Diagnostic Procedure 207
Component Inspection 209
Removal and Installation 209
DTC P0122, P0123 TP SENSOR 210
Component Description 210
CONSULT-II Reference Value in Data Monitor Mode .210
On Board Diagnosis Logic 210
DTC Confirmation Procedure 210
Wiring Diagram 212
Diagnostic Procedure 214
Component Inspection 217
Remove and Installation 217
DTC P0125 ECT SENSOR 218
Description 218
On Board Diagnosis Logic 218
DTC Confirmation Procedure 218
Diagnostic Procedure 219
Component Inspection 220
Removal and Installation 220
DTC P0127 IAT SENSOR 221
Component Description 221
On Board Diagnosis Logic 221
DTC Confirmation Procedure 221
Diagnostic Procedure 222
Component Inspection 223
Removal and Installation 223
DTC P0128 THERMOSTAT FUNCTION 224
On Board Diagnosis Logic 224
DTC Confirmation Procedure 224
Diagnostic Procedure 224
Component Inspection 225
Removal and Installation 225
DTC P0132 HO2S1 226
Component Description 226
CONSULT-II Reference Value in Data Monitor Mode .226
On Board Diagnosis Logic 226
DTC Confirmation Procedure 227
Wiring Diagram 228
Diagnostic Procedure 229

Component Inspection 231
Removal and Installation 232
DTC P0133 HO2S1 233
Component Description 233
CONSULT-II Reference Value in Data Monitor Mode . 233
On Board Diagnosis Logic 233
DTC Confirmation Procedure 234
Overall Function Check 235
Wiring Diagram 236
Diagnostic Procedure 237
Component Inspection 240
Removal and Installation 242
DTC P0134 HO2S1 243
Component Description 243
CONSULT-II Reference Value in Data Monitor Mode . 243
On Board Diagnosis Logic 243
DTC Confirmation Procedure 244
Overall Function Check 245
Wiring Diagram 246
Diagnostic Procedure 247
Component Inspection 248
Removal and Installation 250
DTC P0138 HO2S2 251
Component Description 251
CONSULT-II Reference Value in Data Monitor Mode . 251
On Board Diagnosis Logic 251
DTC Confirmation Procedure 251
Wiring Diagram 253
Diagnostic Procedure 254
Component Inspection 255
Removal and Installation 257
DTC P0139 HO2S2 258
Component Description 258
CONSULT-II Reference Value in Data Monitor Mode . 258
On Board Diagnosis Logic 258
DTC Confirmation Procedure 259
Overall Function Check 259
Wiring Diagram 261
Diagnostic Procedure 262
Component Inspection 264
Removal and Installation 265
DTC P0171 FUEL INJECTION SYSTEM FUNCTION 266
On Board Diagnosis Logic 266
DTC Confirmation Procedure 266
Wiring Diagram 268
Diagnostic Procedure 269
DTC P0172 FUEL INJECTION SYSTEM FUNCTION 273
On Board Diagnosis Logic 273
DTC Confirmation Procedure 273
Wiring Diagram 275
Diagnostic Procedure 276
DTC P0181 FTT SENSOR 279
Component Description 279
On Board Diagnosis Logic 279
DTC Confirmation Procedure 279
Wiring Diagram 281
Diagnostic Procedure 282
Component Inspection 284
Removal and Installation 284
DTC P0182, P0183 FTT SENSOR 285
Component Description 285
On Board Diagnosis Logic 285
DTC Confirmation Procedure 285
Wiring Diagram 286
Diagnostic Procedure 287
Component Inspection 289
Removal and Installation 289
DTC P0222, P0223 TP SENSOR 290
Component Description 290
CONSULT-II Reference Value in Data Monitor Mode . 290
On Board Diagnosis Logic 290
DTC Confirmation Procedure 290
Wiring Diagram 292
Diagnostic Procedure 294
Component Inspection 297
Remove and Installation 297
DTC P0300 - P0304 MULTIPLE CYLINDER MISFIRE, NO. 1 - 4 CYLINDER MISFIRE 298
On Board Diagnosis Logic 298
DTC Confirmation Procedure 298
Diagnostic Procedure 299
DTC P0327, P0328 KS 305
Component Description 305
On Board Diagnosis Logic 305
DTC Confirmation Procedure 305
Wiring Diagram 306
Diagnostic Procedure 307
Component Inspection 309
Removal and Installation 309
DTC P0335 CKP SENSOR (POS) 310
Component Description 310
CONSULT-II Reference Value in Data Monitor Mode . 310
On Board Diagnosis Logic 310
DTC Confirmation Procedure 310
Wiring Diagram 312
Diagnostic Procedure 314
Component Inspection 316
Removal and Installation 317
DTC P0340 CMP SENSOR (PHASE) 318
Component Description 318
On Board Diagnosis Logic 318
DTC Confirmation Procedure 318
Wiring Diagram 320
Diagnostic Procedure 321
Component Inspection 324
Removal and Installation 325
DTC P0420 THREE WAY CATALYST FUNCTION . 326
On Board Diagnosis Logic 326
DTC Confirmation Procedure 326
Overall Function Check 327
Diagnostic Procedure 328
DTC P0441 EVAP CONTROL SYSTEM 332

System Description 332
On Board Diagnosis Logic 332
DTC Confirmation Procedure 333
Overall Function Check 333
Diagnostic Procedure 334
DTC P0442 EVAP CONTROL SYSTEM 338
On Board Diagnosis Logic 338
DTC Confirmation Procedure 339
Diagnostic Procedure 341
Component Inspection 346
DTC P0444, P0445 EVAP CANISTER PURGE VOLUME CONTROL SOLENOID VALVE 348
Description 348
CONSULT-II Reference Value in Data Monitor Mode 348
On Board Diagnosis Logic 349
DTC Confirmation Procedure 349
Wiring Diagram 350
Diagnostic Procedure 352
Component Inspection 353
Removal and Installation 354
DTC P0447 EVAP CANISTER VENT CONTROL VALVE 355
Component Description 355
CONSULT-II Reference Value in Data Monitor Mode 355
On Board Diagnosis Logic 355
DTC Confirmation Procedure 355
Wiring Diagram 357
Diagnostic Procedure 358
Component Inspection 360
DTC P0451 EVAP CONTROL SYSTEM PRESSURE SENSOR 362
Component Description 362
CONSULT-II Reference Value in Data Monitor Mode 362
On Board Diagnosis Logic 362
DTC Confirmation Procedure 363
Diagnostic Procedure 363
Component Inspection 364
DTC P0452 EVAP CONTROL SYSTEM PRESSURE SENSOR 365
Component Description 365
CONSULT-II Reference Value in Data Monitor Mode 365
On Board Diagnosis Logic 365
DTC Confirmation Procedure 366
Wiring Diagram 367
Diagnostic Procedure 368
Component Inspection 371
DTC P0453 EVAP CONTROL SYSTEM PRESSURE SENSOR 372
Component Description 372
CONSULT-II Reference Value in Data Monitor Mode 372
On Board Diagnosis Logic 372
DTC Confirmation Procedure 373
Wiring Diagram 374
Diagnostic Procedure 375
Component Inspection 379
DTC P0455 EVAP CONTROL SYSTEM 380
On Board Diagnosis Logic 380
DTC Confirmation Procedure 381
Diagnostic Procedure 382
DTC P0456 EVAP CONTROL SYSTEM 388
On Board Diagnosis Logic 388
DTC Confirmation Procedure 389
Overall Function Check 390
Diagnostic Procedure 391
Component Inspection 397
DTC P0460 FUEL LEVEL SENSOR 399
Component Description 399
On Board Diagnostic Logic 399
DTC Confirmation Procedure 399
Diagnostic Procedure 400
Removal and Installation 400
DTC P0461 FUEL LEVEL SENSOR 401
Component Description 401
On Board Diagnostic Logic 401
Overall Function Check 401
Diagnostic Procedure 402
Removal and Installation 402
DTC P0462, P0463 FUEL LEVEL SENSOR 403
Component Description 403
On Board Diagnostic Logic 403
DTC Confirmation Procedure 403
Diagnostic Procedure 404
Removal and Installation 404
DTC P0500 VSS 405
Description 405
On Board Diagnosis Logic 405
DTC Confirmation Procedure 405
Overall Function Check 406
Diagnostic Procedure 406
DTC P0506 ISC SYSTEM 407
Description 407
On Board Diagnosis Logic 407
DTC Confirmation Procedure 407
Diagnostic Procedure 408
DTC P0507 ISC SYSTEM 409
Description 409
On Board Diagnosis Logic 409
DTC Confirmation Procedure 409
Diagnostic Procedure 410
DTC P0550 PSP SENSOR 411
Component Description 411
CONSULT-II Reference Value in Data Monitor Mode 411
On Board Diagnosis Logic 411
DTC Confirmation Procedure 411
Wiring Diagram 412
Diagnostic Procedure 413
Component Inspection 415
Removal and Installation 415
DTC P0605 ECM 416
Component Description 416
On Board Diagnosis Logic 416

DTC Confirmation Procedure 416
Diagnostic Procedure 417
DTC P1065 ECM POWER SUPPLY 419
Component Description 419
On Board Diagnosis Logic 419
DTC Confirmation Procedure 419
Wiring Diagram 420
Diagnostic Procedure 421
DTC P1111 IVT CONTROL SOLENOID VALVE ... 423
Component Description 423
CONSULT-II Reference Value in Data Monitor Mode . 423
On Board Diagnosis Logic 423
DTC Confirmation Procedure 423
Wiring Diagram 424
Diagnostic Procedure 425
Component Inspection 426
Removal and Installation 426
DTC P1121 ELECTRIC THROTTLE CONTROL ACTUATOR 427
Component Description 427
On Board Diagnosis Logic 427
DTC Confirmation Procedure 427
Diagnostic Procedure 428
DTC P1122 ELECTRIC THROTTLE CONTROL FUNCTION 429
Description 429
On Board Diagnosis Logic 429
DTC Confirmation Procedure 429
Wiring Diagram 430
Diagnostic Procedure 432
Component Inspection 435
Remove and Installation 436
DTC P1124, P1126 THROTTLE CONTROL MOTOR RELAY 437
Component Description 437
CONSULT-II Reference Value in Data Monitor Mode . 437
On Board Diagnosis Logic 437
DTC Confirmation Procedure 437
Wiring Diagram 439
Diagnostic Procedure 440
Component Inspection 442
DTC P1128 THROTTLE CONTROL MOTOR 443
Component Description 443
On Board Diagnosis Logic 443
DTC Confirmation Procedure 443
Wiring Diagram 444
Diagnostic Procedure 446
Component Inspection 447
Removal and Installation 447
DTC P1143 HO2S1 448
Component Description 448
CONSULT-II Reference Value in Data Monitor Mode . 448
On Board Diagnosis Logic 448
DTC Confirmation Procedure 449
Overall Function Check 449
Diagnostic Procedure 450
Component Inspection 452
Removal and Installation 453
DTC P1144 HO2S1 454
Component Description 454
CONSULT-II Reference Value in Data Monitor Mode . 454
On Board Diagnosis Logic 454
DTC Confirmation Procedure 455
Overall Function Check 455
Diagnostic Procedure 456
Component Inspection 458
Removal and Installation 459
DTC P1146 HO2S2 460
Component Description 460
CONSULT-II Reference Value in Data Monitor Mode . 460
On Board Diagnosis Logic 460
DTC Confirmation Procedure 461
Overall Function Check 461
Wiring Diagram 463
Diagnostic Procedure 464
Component Inspection 466
Removal and Installation 467
DTC P1147 HO2S2 468
Component Description 468
CONSULT-II Reference Value in Data Monitor Mode . 468
On Board Diagnosis Logic 468
DTC Confirmation Procedure 469
Overall Function Check 469
Wiring Diagram 471
Diagnostic Procedure 472
Component Inspection 474
Removal and Installation 475
DTC P1148 CLOSED LOOP CONTROL 476
On Board Diagnosis Logic 476
DTC Confirmation Procedure 476
Overall Function Check 476
Diagnostic Procedure 477
DTC P1211 TCS CONTROL UNIT 478
Description 478
On Board Diagnosis Logic 478
DTC Confirmation Procedure 478
Diagnostic Procedure 478
DTC P1212 TCS COMMUNICATION LINE 479
Description 479
On Board Diagnosis Logic 479
DTC Confirmation Procedure 479
Diagnostic Procedure 479
DTC P1217 ENGINE OVER TEMPERATURE 480
Description 480
CONSULT-II Reference Value in Data Monitor Mode . 481
On Board Diagnosis Logic 481
Overall Function Check 481
Wiring Diagram 484
Diagnostic Procedure 485
Main 12 Causes of Overheating 492
Component Inspection 493

DTC P1225 TP SENSOR 495
Component Description 495
On Board Diagnosis Logic 495
DTC Confirmation Procedure 495
Diagnostic Procedure 496
Remove and Installation 496
DTC P1226 TP SENSOR 497
Component Description 497
On Board Diagnosis Logic 497
DTC Confirmation Procedure 497
Diagnostic Procedure 498
Remove and Installation 498
DTC P1229 SENSOR POWER SUPPLY 499
On Board Diagnosis Logic 499
DTC Confirmation Procedure 499
Wiring Diagram 500
Diagnostic Procedure 501
DTC P1444 EVAP CANISTER PURGE VOLUME CONTROL SOLENOID VALVE 504
Description 504
CONSULT-II Reference Value in Data Monitor Mode 504
On Board Diagnosis Logic 505
DTC Confirmation Procedure 505
Wiring Diagram 506
Diagnostic Procedure 508
Component Inspection 510
Removal and Installation 511
DTC P1446 EVAP CANISTER VENT CONTROL VALVE 512
Component Description 512
CONSULT-II Reference Value in Data Monitor Mode 512
On Board Diagnosis Logic 512
DTC Confirmation Procedure 512
Wiring Diagram 514
Diagnostic Procedure 515
Component Inspection 517
DTC P1564 ASCD STEERING SWITCH 519
Component Description 519
CONSULT-II Reference Value in Data Monitor Mode 519
On Board Diagnosis Logic 519
DTC Confirmation Procedure 519
Wiring Diagram 521
Diagnostic Procedure 523
Component Inspection 526
DTC P1572 ASCD BRAKE SWITCH 527
Component Description 527
CONSULT-II Reference Value in Data Monitor Mode 527
On Board Diagnosis Logic 527
DTC Confirmation Procedure 528
Wiring Diagram 529
Diagnostic Procedure 531
Component Inspection 536
DTC P1574 ASCD VEHICLE SPEED SENSOR 538
Component Description 538
On Board Diagnosis Logic 538
DTC Confirmation Procedure 538
Diagnostic Procedure 539
DTC P1706 PNP SWITCH 540
Component Description 540
CONSULT-II Reference Value in Data Monitor Mode 540
On Board Diagnosis Logic 540
DTC Confirmation Procedure 540
Overall Function Check 540
Wiring Diagram 542
Diagnostic Procedure 543
DTC P1800 VIAS CONTROL SOLENOID VALVE 545
Component Description 545
CONSULT-II Reference Value in Data Monitor Mode 545
On Board Diagnosis Logic 545
DTC Confirmation Procedure 545
Wiring Diagram 546
Diagnostic Procedure 547
Component Inspection 548
Removal and Installation 549
DTC P1805 BRAKE SWITCH 550
Description 550
CONSULT-II Reference Value in Data Monitor Mode 550
On Board Diagnosis Logic 550
DTC Confirmation Procedure 550
Wiring Diagram 551
Diagnostic Procedure 552
Component Inspection 553
DTC P2122, P2123 APP SENSOR 555
Component Description 555
CONSULT-II Reference Value in Data Monitor Mode 555
On Board Diagnosis Logic 555
DTC Confirmation Procedure 556
Wiring Diagram 557
Diagnostic Procedure 559
Component Inspection 561
Removal and Installation 561
DTC P2127, P2128 APP SENSOR 562
Component Description 562
CONSULT-II Reference Value in Data Monitor Mode 562
On Board Diagnosis Logic 562
DTC Confirmation Procedure 563
Wiring Diagram 564
Diagnostic Procedure 566
Component Inspection 569
Remove and Installation 569
DTC P2135 TP SENSOR 570
Component Description 570
CONSULT-II Reference Value in Data Monitor Mode 570
On Board Diagnosis Logic 570
DTC Confirmation Procedure 570
Wiring Diagram 572
Diagnostic Procedure 574

Component Inspection 577
Remove and Installation 577
DTC P2138 APP SENSOR 578
Component Description 578
CONSULT-II Reference Value in Data Monitor Mode . 578
On Board Diagnosis Logic 578
DTC Confirmation Procedure 579
Wiring Diagram 580
Diagnostic Procedure 582
Component Inspection 585
Remove and Installation 585
IGNITION SIGNAL 586
Component Description 586
Wiring Diagram 587
Diagnostic Procedure 590
Component Inspection 595
Removal and Installation 596
VIAS 597
Description 597
CONSULT-II Reference Value in Data Monitor Mode . 598
Wiring Diagram 599
Diagnostic Procedure 601
Component Inspection 605
Removal and Installation 606
INJECTOR CIRCUIT 607
Component Description 607
CONSULT-II Reference Value in Data Monitor Mode . 607
Wiring Diagram 608
Diagnostic Procedure 609
Component Inspection 612
Removal and Installation 612
FUEL PUMP CIRCUIT 613
Description 613
CONSULT-II Reference Value in Data Monitor Mode . 613
Wiring Diagram 614
Diagnostic Procedure 615
Component Inspection 618
Removal and Installation 618
REFRIGERANT PRESSURE SENSOR 619
Component Description 619
Wiring Diagram 620
Diagnostic Procedure 621
Removal and Installation 624
ELECTRICAL LOAD SIGNAL 625
CONSULT-II Reference Value in Data Monitor Mode . 625
Wiring Diagram 626
Diagnostic Procedure 627
Wiring Diagram 632
Diagnostic Procedure 633
Wiring Diagram 635
Diagnostic Procedure 636
ASCD BRAKE SWITCH 638
Component Description 638
CONSULT-II Reference Value in Data Monitor Mode . 638
Wiring Diagram 639
Diagnostic Procedure 641
Component Inspection 646
ASCD INDICATOR 648
Component Description 648
CONSULT-II Reference Value in Data Monitor Mode . 648
Wiring Diagram 649
Diagnostic Procedure 651
SNOW MODE SWITCH 652
Description 652
CONSULT-II Reference Value in the Data Monitor Mode 652
Wiring Diagram 653
Diagnostic Procedure 655
Component Inspection 658
MIL AND DATA LINK CONNECTOR 659
Wiring Diagram 659
SERVICE DATA AND SPECIFICATIONS (SDS) ... 663
Fuel Pressure 663
Idle Speed and Ignition Timing 663
Calculated Load Value 663
Mass Air Flow Sensor 663
Intake Air Temperature Sensor 663
Engine Coolant Temperature Sensor 663
Heated Oxygen Sensor 1 Heater 663
Heated Oxygen Sensor 2 Heater 663
Crankshaft Position Sensor (POS) 663
Camshaft Position Sensor (PHASE) 663
Throttle Control Motor 664
Injector 664
Fuel Pump 664

INDEX FOR DTC

PFP:00024

DTC No. Index

ABS00D80

NOTE:

If DTC U1000 or U1001 is displayed with other DTC, first perform the trouble diagnosis for DTC U1000, U1001. Refer to **EC-162, "DTC U1000, U1001 CAN COMMUNICATION LINE"** **.**

DTC*1		Items (CONSULT-II screen terms)	Reference page
CONSULT-II GST*2	ECM*3		
No DTC	Flashing*6	NO DTC IS DETECTED. FURTHER TESTING MAY BE REQUIRED.	EC-62
U1000	1000*4	CAN COMM CIRCUIT	EC-162
U1001	1001*4	CAN COMM CIRCUIT	EC-162
P0000	**0000**	**NO DTC IS DETECTED. FURTHER TESTING MAY BE REQUIRED.**	—
P0011	0011	INT/V TIM CONT-B1	EC-165
P0031	0031	HO2S1 HTR (B1)	EC-169
P0032	0032	HO2S1 HTR (B1)	EC-169
P0037	0037	HO2S2 HTR (B1)	EC-175
P0038	0038	HO2S2 HTR (B1)	EC-175
P0101	0101	MAF SEN/CIRCUIT	EC-181
P0102	0102	MAF SEN/CIRCUIT	EC-190
P0103	0103	MAF SEN/CIRCUIT	EC-190
P0112	0112	IAT SEN/CIRCUIT	EC-198
P0113	0113	IAT SEN/CIRCUIT	EC-198
P0117	0117	ECT SEN/CIRCUIT	EC-204
P0118	0118	ECT SEN/CIRCUIT	EC-204
P0122	0122	TP SEN 2/CIRC	EC-210
P0123	0123	TP SEN 2/CIRC	EC-210
P0125	0125	ECT SENSOR	EC-218
P0127	0127	IAT SENSOR	EC-221
P0128	0128	THERMSTAT FNCTN	EC-224
P0132	0132	HO2S1 (B1)	EC-224
P0133	0133	HO2S1 (B1)	EC-233
P0134	0134	HO2S1 (B1)	EC-243
P0138	0138	HO2S2 (B1)	EC-251
P0139	0139	HO2S2 (B1)	EC-258
P0171	0171	FUEL SYS-LEAN-B1	EC-266
P0172	0172	FUEL SYS-RICH-B1	EC-273
P0181	0181	FTT SENSOR	EC-279
P0182	0182	FTT SEN/CIRCUIT	EC-285
P0183	0183	FTT SEN/CIRCUIT	EC-285
P0222	0222	TP SEN 1/CIRC	EC-290
P0223	0223	TP SEN 1/CIRC	EC-290
P0300	0300	MULTI CYL MISFIRE	EC-298
P0301	0301	CYL 1 MISFIRE	EC-298

DTC*1		Items (CONSULT-II screen terms)	Reference page
CONSULT-II GST*2	ECM*3		
P0302	0302	CYL 2 MISFIRE	EC-298
P0303	0303	CYL 3 MISFIRE	EC-298
P0304	0304	CYL 4 MISFIRE	EC-298
P0327	0327	KNOCK SEN/CIRC-B1	EC-305
P0328	0328	KNOCK SEN/CIRC-B1	EC-305
P0335	0335	CKP SEN/CIRCUIT	EC-310
P0340	0340	CMP SEN/CIRC-B1	EC-318
P0420	0420	TW CATALYST SYS-B1	EC-326
P0441	0441	EVAP PURG FLOW/MON	EC-332
P0442	0442	EVAP SMALL LEAK	EC-338
P0444	0444	PURG VOLUME CONT/V	EC-348
P0445	0445	PURG VOLUME CONT/V	EC-348
P0447	0447	VENT CONTROL VALVE	EC-355
P0451	0451	EVAP SYS PRES SEN	EC-362
P0452	0452	EVAP SYS PRES SEN	EC-365
P0453	0453	EVAP SYS PRES SEN	EC-372
P0455	0455	EVAP GROSS LEAK	EC-380
P0456	0456	EVAP VERY SML LEAK	EC-388
P0460	0460	FUEL LEV SEN SLOSH	EC-399
P0461	0461	FUEL LEVEL SENSOR	EC-401
P0462	0462	FUEL LEVL SEN/CIRC	EC-403
P0463	0463	FUEL LEVL SEN/CIRC	EC-403
P0500	0500	VEH SPEED SEN/CIRC*5	EC-405
P0506	0506	ISC SYSTEM	EC-407
P0507	0507	ISC SYSTEM	EC-409
P0550	0550	PW ST P SEN/CIRC	EC-411
P0605	0605	ECM	EC-416
P0705	0705	PNP SW/CIRC	AT-98
P0710	0710	ATF TEMP SEN/CIRC	AT-104
P0720	0720	VEH SPD SEN/CIR AT*5	AT-109
P0725	0725	ENGINE SPEED SIG	AT-115
P0731	0731	A/T 1ST GR FNCTN	AT-120
P0732	0732	A/T 2ND GR FNCTN	AT-125
P0733	0733	A/T 3RD GR FNCTN	AT-130
P0734	0734	A/T 4TH GR FNCTN	AT-135
P0740	0740	TCC SOLENOID/CIRC	AT-142
P0744	0744	A/T TCC S/V FNCTN	AT-147
P0745	0745	L/PRESS SOL/CIRC	AT-155
P0750	0750	SFT SOL A/CIRC	AT-162
P0755	0755	SFT SOL B/CIRC	AT-167
P1065	1065	ECM BACK UP/CIRC	EC-419
P1111	1111	INT/V TIM V/CIR-B1	EC-423

INDEX FOR DTC

DTC*1		Items (CONSULT-II screen terms)	Reference page
CONSULT-II GST*2	ECM*3		
P1121	1121	ETC ACTR	EC-427
P1122	1122	ETC FUNCTION/CIRC	EC-429
P1124	1124	ETC MOT PWR	EC-437
P1126	1126	ETC MOT PWR	EC-437
P1128	1128	ETC MOT	EC-443
P1143	1143	HO2S1 (B1)	EC-448
P1144	1144	HO2S1 (B1)	EC-454
P1146	1146	HO2S2 (B1)	EC-460
P1147	1147	HO2S2 (B1)	EC-468
P1148	1148	CLOSED LOOP-B1	EC-476
P1211	1211	TCS C/U FUNCTION	EC-478
P1212	1212	TCS/CIRC	EC-479
P1217	1217	ENG OVER TEMP	EC-480
P1225	1225	CTP LEARNING	EC-495
P1226	1226	CTP LEARNING	EC-497
P1229	1229	SENSOR POWER/CIRC	EC-499
P1444	1444	PURG VOLUME CONT/V	EC-504
P1446	1446	VENT CONTROL VALVE	EC-512
P1564	1564	ASCD SW	EC-519
P1572	1572	ASCD BRAKE SW	EC-527
P1574	1574	ASCD VHL SPD SEN	EC-538
P1610 - P1615	1610 - 1615	NATS MALFUNCTION	EC-46
P1705	1705	TP SEN/CIRC A/T	AT-172
P1706	1706	P-N POS SW/CIRCUIT	EC-540
P1720	1720	V/SP SEN (A/T OUT)	AT-109
P1760	1760	O/R CLTCH SOL/CIRC	AT-177
P1800	1800	VIAS S/V CIRC	EC-545
P1805	1805	BRAKE SW/CIRCUIT	EC-550
P2122	2122	APP SEN 1/CIRC	EC-555
P2123	2123	APP SEN 1/CIRC	EC-555
P2127	2127	APP SEN 2/CIRC	EC-562
P2128	2128	APP SEN 2/CIRC	EC-562
P2135	2135	TP SENSOR	EC-570
P2138	2138	APP SENSOR	EC-578

*1: 1st trip DTC No. is the same as DTC No.
*2: This number is prescribed by SAE J2012.
*3: In Diagnostic Test Mode II (Self-diagnostic results), this number is controlled by NISSAN.
*4: The troubleshooting for this DTC needs CONSULT-II.
*5: When the fail-safe operations for both self-diagnoses occur, the MIL illuminates.
*6: When engine is running.

Alphabetical Index

ABS00D7Z

NOTE:
If DTC U1000 or U1001 is displayed with other DTC, first perform the trouble diagnosis for DTC U1000, U1001. Refer to **EC-162, "DTC U1000, U1001 CAN COMMUNICATION LINE" .**

Items (CONSULT-II screen terms)	DTC*1		Reference page
	CONSULT-II GST*2	ECM*3	
A/T 1ST GR FNCTN	P0731	0731	AT-120
A/T 2ND GR FNCTN	P0732	0732	AT-125
A/T 3RD GR FNCTN	P0733	0733	AT-130
A/T 4TH GR FNCTN	P0734	0734	AT-135
A/T TCC S/V FNCTN	P0744	0744	AT-147
APP SEN 1/CIRC	P2122	2122	EC-555
APP SEN 1/CIRC	P2123	2123	EC-555
APP SEN 2/CIRC	P2127	2127	EC-562
APP SEN 2/CIRC	P2128	2128	EC-562
APP SENSOR	P2138	2138	EC-578
ASCD BRAKE SW	P1572	1572	EC-527
ASCD SW	P1564	1564	EC-519
ASCD VHL SPD SEN	P1574	1574	EC-538
ATF TEMP SEN/CIRC	P0710	0710	AT-104
BRAKE SW/CIRCUIT	P1805	1805	EC-550
CAN COMM CIRCUIT	U1000	1000*4	EC-162
CAN COMM CIRCUIT	U1001	1001*4	EC-162
CKP SEN/CIRCUIT	P0335	0335	EC-310
CLOSED LOOP-B1	P1148	1148	EC-476
CMP SEN/CIRC-B1	P0340	0340	EC-318
CTP LEARNING	P1225	1225	EC-495
CTP LEARNING	P1226	1226	EC-497
CYL 1 MISFIRE	P0301	0301	EC-298
CYL 2 MISFIRE	P0302	0302	EC-298
CYL 3 MISFIRE	P0303	0303	EC-298
CYL 4 MISFIRE	P0304	0304	EC-298
ECM	P0605	0605	EC-416
ECM BACK UP/CIRC	P1065	1065	EC-419
ECT SEN/CIRCUIT	P0117	0117	EC-204
ECT SEN/CIRCUIT	P0118	0118	EC-204
ECT SENSOR	P0125	0125	EC-218
ENG OVER TEMP	P1217	1217	EC-480
ENGINE SPEED SIG	P0725	0725	AT-115
ETC ACTR	P1121	1121	EC-427
ETC FUNCTION/CIRC	P1122	1122	EC-429
ETC MOT	P1128	1128	EC-443
ETC MOT PWR	P1124	1124	EC-437
ETC MOT PWR	P1126	1126	EC-437
EVAP GROSS LEAK	P0455	0455	EC-380

INDEX FOR DTC

Items (CONSULT-II screen terms)	DTC*1		Reference page
	CONSULT-II GST*2	ECM*3	
EVAP PURG FLOW/MON	P0441	0441	EC-332
EVAP SMALL LEAK	P0442	0442	EC-338
EVAP SYS PRES SEN	P0451	0451	EC-362
EVAP SYS PRES SEN	P0452	0452	EC-365
EVAP SYS PRES SEN	P0453	0453	EC-372
EVAP VERY SML LEAK	P0456	0456	EC-388
FTT SEN/CIRCUIT	P0182	0182	EC-285
FTT SEN/CIRCUIT	P0183	0183	EC-285
FTT SENSOR	P0181	0181	EC-279
FUEL LEV SEN SLOSH	P0460	0460	EC-399
FUEL LEVEL SENSOR	P0461	0461	EC-401
FUEL LEVL SEN/CIRC	P0462	0462	EC-403
FUEL LEVL SEN/CIRC	P0463	0463	EC-403
FUEL SYS-LEAN-B1	P0171	0171	EC-266
FUEL SYS-RICH-B1	P0172	0172	EC-273
HO2S1 (B1)	P0132	0132	EC-226
HO2S1 (B1)	P0133	0133	EC-233
HO2S1 (B1)	P0134	0134	EC-243
HO2S1 (B1)	P1143	1143	EC-448
HO2S1 (B1)	P1144	1144	EC-454
HO2S1 HTR (B1)	P0031	0031	EC-169
HO2S1 HTR (B1)	P0032	0032	EC-169
HO2S2 (B1)	P0138	0138	EC-251
HO2S2 (B1)	P0139	0139	EC-258
HO2S2 (B1)	P1146	1146	EC-460
HO2S2 (B1)	P1147	1147	EC-468
HO2S2 HTR (B1)	P0037	0037	EC-175
HO2S2 HTR (B1)	P0038	0038	EC-175
IAT SEN/CIRCUIT	P0112	0112	EC-198
IAT SEN/CIRCUIT	P0113	0113	EC-198
IAT SENSOR	P0127	0127	EC-221
INT/V TIM CONT-B1	P0011	0011	EC-165
INT/V TIM V/CIR-B1	P1111	1111	EC-423
ISC SYSTEM	P0506	0506	EC-407
ISC SYSTEM	P0507	0507	EC-409
KNOCK SEN/CIRC-B1	P0327	0327	EC-305
KNOCK SEN/CIRC-B1	P0328	0328	EC-305
L/PRESS SOL/CIRC	P0745	0745	AT-155
MAF SEN/CIRCUIT	P0101	0101	EC-181
MAF SEN/CIRCUIT	P0102	0102	EC-190
MAF SEN/CIRCUIT	P0103	0103	EC-190
MULTI CYL MISFIRE	P0300	0300	EC-298

Items (CONSULT-II screen terms)	DTC*1		Reference page
	CONSULT-II GST*2	ECM*3	
NATS MALFUNCTION	P1610 - P1615	1610 - 1615	EC-46
NO DTC IS DETECTED. FURTHER TESTING MAY BE REQUIRED.	No DTC	Flashing*6	EC-62
NO DTC IS DETECTED. FURTHER TESTING MAY BE REQUIRED.	**P0000**	**0000**	—
O/R CLTCH SOL/CIRC	P1760	1760	AT-177
P-N POS SW/CIRCUIT	P1706	1706	EC-540
PNP SW/CIRC	P0705	0705	AT-98
PURG VOLUME CONT/V	P0444	0444	EC-348
PURG VOLUME CONT/V	P0445	0445	EC-348
PURG VOLUME CONT/V	P1444	1444	EC-504
PW ST P SEN/CIRC	P0550	0550	EC-411
SENSOR POWER/CIRC	P1229	1229	EC-499
SFT SOL A/CIRC	P0750	0750	AT-162
SFT SOL B/CIRC	P0755	0755	AT-167
TCC SOLENOID/CIRC	P0740	0740	AT-142
TCS C/U FUNCTIION	P1211	1211	EC-478
TCS/CIRC	P1212	1212	EC-479
THERMSTAT FNCTN	P0128	0128	EC-224
TP SEN 1/CIRC	P0222	0222	EC-290
TP SEN 1/CIRC	P0223	0223	EC-290
TP SEN 2/CIRC	P0122	0122	EC-210
TP SEN 2/CIRC	P0123	0123	EC-210
TP SENSOR	P2135	2135	EC-570
TP SEN/CIRC A/T	P1705	1705	AT-172
TW CATALYST SYS-B1	P0420	0420	EC-326
V/SP SEN (A/T OUT)	P1720	1720	AT-109
VEH SPD SEN/CIR AT*5	P0720	0720	AT-109
VEH SPEED SEN/CIRC*5	P0500	0500	EC-405
VENT CONTROL VALVE	P0447	0447	EC-355
VENT CONTROL VALVE	P1446	1446	EC-460
VIAS S/V CIRC	P1800	1800	EC-545

*1: 1st trip DTC No. is the same as DTC No.
*2: This number is prescribed by SAE J2012.
*3: In Diagnostic Test Mode II (Self-diagnostic results), this number is controlled by NISSAN.
*4: The troubleshooting for this DTC needs CONSULT-II.
*5: When the fail-safe operations for both self-diagnoses occur, the MIL illuminates.
*6: When engine is running.

PRECAUTIONS

PFP:00001

Precautions for Supplemental Restraint System (SRS) “AIR BAG” and “SEAT BELT PRE-TENSIONER”

ABS00DCS

The Supplemental Restraint System such as “AIR BAG” and “SEAT BELT PRE-TENSIONER”, used along with a front seat belt, helps to reduce the risk or severity of injury to the driver and front passenger for certain types of collision. Information necessary to service the system safely is included in the SRS and SB section of this Service Manual.

WARNING:

- **To avoid rendering the SRS inoperative, which could increase the risk of personal injury or death in the event of a collision which would result in air bag inflation, all maintenance must be performed by an authorized NISSAN/INFINITI dealer.**
- **Improper maintenance, including incorrect removal and installation of the SRS, can lead to personal injury caused by unintentional activation of the system. For removal of Spiral Cable and Air Bag Module, see the SRS section.**
- **Do not use electrical test equipment on any circuit related to the SRS unless instructed to in this Service Manual. SRS wiring harnesses can be identified by yellow and/or orange harnesses or harness connectors.**

On Board Diagnostic (OBD) System of Engine and A/T

ABS00CKO

The ECM has an on board diagnostic system. It will light up the malfunction indicator (MIL) to warn the driver of a malfunction causing emission deterioration.

CAUTION:

- **Be sure to turn the ignition switch OFF and disconnect the battery ground cable before any repair or inspection work. The open/short circuit of related switches, sensors, solenoid valves, etc. will cause the MIL to light up.**
- **Be sure to connect and lock the connectors securely after work. A loose (unlocked) connector will cause the MIL to light up due to the open circuit. (Be sure the connector is free from water, grease, dirt, bent terminals, etc.)**
- **Certain systems and components, especially those related to OBD, may use a new style slide-locking type harness connector. For description and how to disconnect, refer to PG-44, "HARNESS CONNECTOR" .**
- **Be sure to route and secure the harnesses properly after work. The interference of the harness with a bracket, etc. may cause the MIL to light up due to the short circuit.**
- **Be sure to connect rubber tubes properly after work. A misconnected or disconnected rubber tube may cause the MIL to light up due to the malfunction of the EVAP system or fuel injection system, etc.**
- **Be sure to erase the unnecessary malfunction information (repairs completed) from the ECM and TCM (Transmission control module) before returning the vehicle to the customer.**

Precaution

ABS00CKP

- **Always use a 12 volt battery as power source.**
- **Do not attempt to disconnect battery cables while engine is running.**
- **Before connecting or disconnecting the ECM harness connector, turn ignition switch OFF and disconnect battery ground cable. Failure to do so may damage the ECM because battery voltage is applied to ECM even if ignition switch is turned OFF.**
- **Before removing parts, turn ignition switch OFF and then disconnect battery ground cable.**

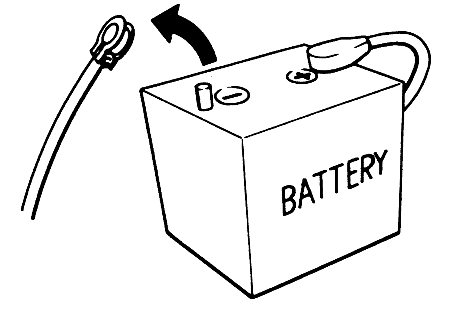

SEF289H

- **Do not disassemble ECM.**
- **If battery cable is disconnected, the memory will return to the initial ECM values.**
  The ECM will now start to self-control at its initial values. Engine operation can vary slightly when the cable is disconnected. However, this is not an indication of a malfunction. Do not replace parts because of a slight variation.
- **If the battery is disconnected, the following emission related diagnostic information will be lost within 24 hours.**
  - **Diagnostic trouble codes**
  - **1st trip diagnostic trouble codes**
  - **Freeze frame data**
  - **1st freeze frame data**
  - **System readiness test (SRT) codes**
  - **Test values**

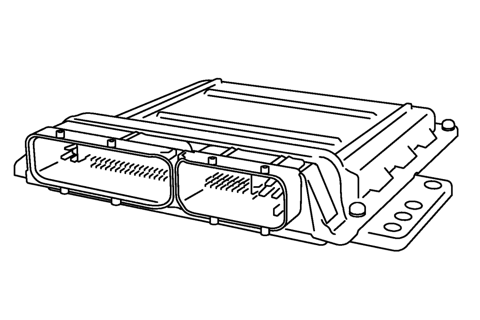
PBIB1164E

- **When connecting ECM harness connector, fasten it securely with a lever as far as it will go as shown in the figure.**

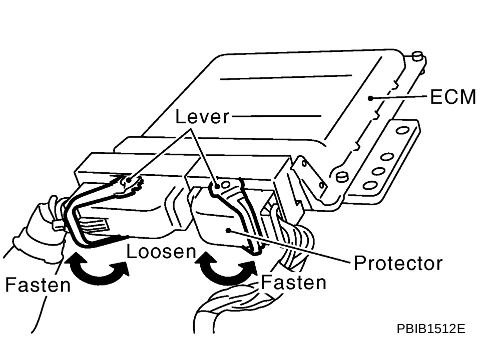

PBIB1512E

- **When connecting or disconnecting pin connectors into or from ECM, take care not to damage pin terminals (bend or break).**
  Make sure that there are not any bends or breaks on ECM pin terminal, when connecting pin connectors.
- **Securely connect ECM harness connectors.**
  A poor connection can cause an extremely high (surge) voltage to develop in coil and condenser, thus resulting in damage to ICs.
- **Keep engine control system harness at least 10 cm (4 in) away from adjacent harness, to prevent engine control system malfunctions due to receiving external noise, degraded operation of ICs, etc.**
- **Keep engine control system parts and harness dry.**

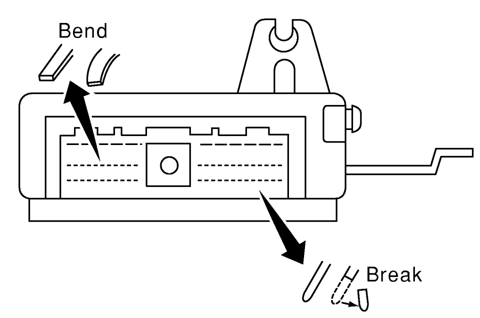

PBIB0090E

- **Before replacing ECM, perform “ECM Terminals and Reference Value” inspection and make sure ECM functions properly. Refer to EC-115 .**
- **Handle mass air flow sensor carefully to avoid damage.**
- **Do not disassemble mass air flow sensor.**
- **Do not clean mass air flow sensor with any type of detergent.**
- **Do not disassemble electric throttle control actuator.**
- **Even a slight leak in the air intake system can cause serious incidents.**
- **Do not shock or jar the camshaft position sensor (PHASE), crankshaft position sensor (POS).**

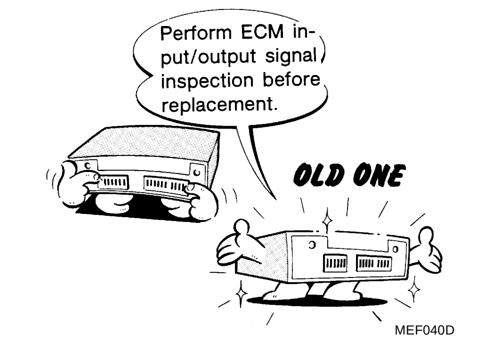

MEF040D

- **After performing each TROUBLE DIAGNOSIS, perform DTC Confirmation Procedure or Overall Function Check.**
  The DTC should not be displayed in the DTC Confirmation Procedure if the repair is completed. The Overall Function Check should be a good result if the repair is completed.

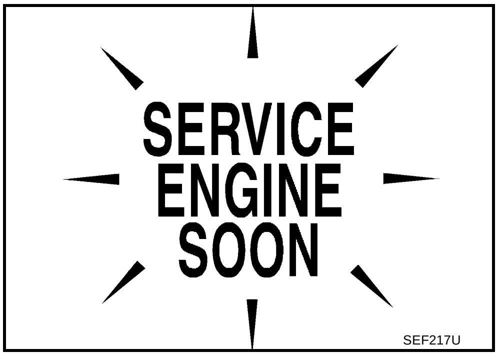

SEF217U

- **When measuring ECM signals with a circuit tester, never allow the two tester probes to contact.**
  Accidental contact of probes will cause a short circuit and damage the ECM power transistor.
- **Do not use ECM ground terminals when measuring input/ output voltage. Doing so may result in damage to the ECM's transistor. Use a ground other than ECM terminals, such as the ground.**

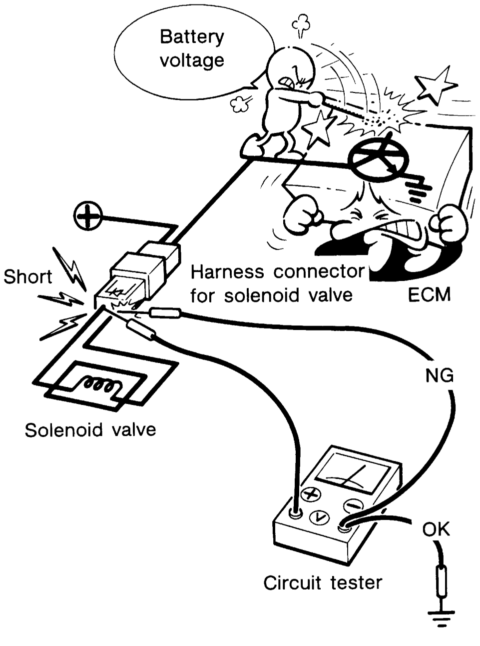

SEF348N

- **Do not operate fuel pump when there is no fuel in lines.**
- **Tighten fuel hose clamps to the specified torque.**

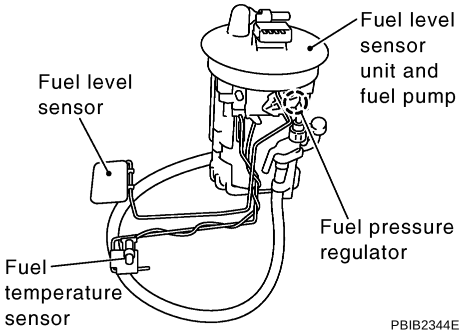

PBIB2344E

- **Do not depress accelerator pedal when starting.**
- **Immediately after starting, do not rev up engine unnecessarily.**
- **Do not rev up engine just prior to shutdown.**

SEF709Y

- **When installing C.B. ham radio or a mobile phone, be sure to observe the following as it may adversely affect electronic control systems depending on installation location.**
  - **Keep the antenna as far as possible from the electronic control units.**
  - **Keep the antenna feeder line more than 20 cm (8 in) away from the harness of electronic controls.**
    Do not let them run parallel for a long distance.
  - **Adjust the antenna and feeder line so that the standing-wave radio can be kept smaller.**
  - **Be sure to ground the radio to vehicle body.**

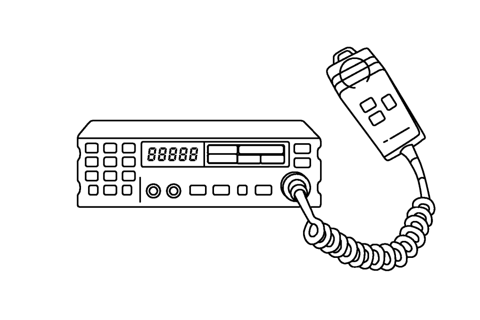

SEF708Y

Wiring Diagrams and Trouble Diagnosis

ABS00CKQ

When you read wiring diagrams, refer to the following:

- GI-14, "How to Read Wiring Diagrams"
- PG-2, "POWER SUPPLY ROUTING" for power distribution circuit

When you perform trouble diagnosis, refer to the following:

- GI-10, "HOW TO FOLLOW TEST GROUPS IN TROUBLE DIAGNOSES"
- GI-26, "How to Perform Efficient Diagnosis for an Electrical Incident"

PREPARATION

PFP:00002

Special Service Tools

ABS00CKR

The actual shapes of Kent-Moore tools may differ from those of special service tools illustrated here.

Tool number (Kent-Moore No.) Tool name		Description
EG17650301 (J-33984-A) Radiator cap tester adapter	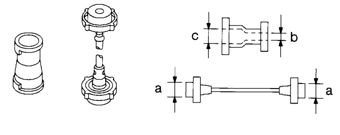 S-NT564	Adapting radiator cap tester to radiator cap and radiator filler neck **a: 28 (1.10) dia.** **b: 31.4 (1.236) dia.** **c: 41.3 (1.626) dia.** Unit: mm (in)
KV10117100 (J-36471-A) Heated oxygen sensor wrench	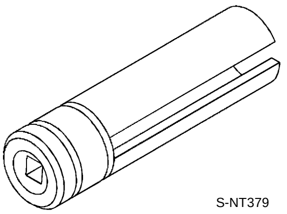 S-NT379	Loosening or tightening heated oxygen sensors with 22 mm (0.87 in) hexagon nut
KV10114400 (J-38365) Heated oxygen sensor wrench	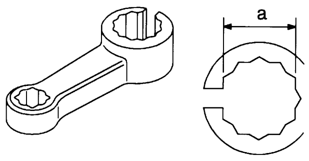 S-NT636	Loosening or tightening heated oxygen sensors **a: 22 mm (0.87 in)**
(J-44321) Fuel pressure gauge kit	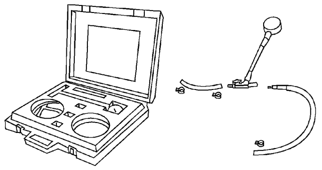 LEC642	Checking fuel pressure
(J-44321-6) Fuel pressure adapter	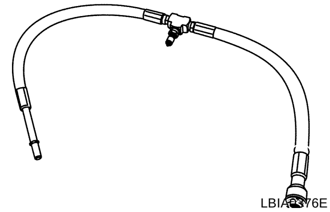 LBIA0376E	Connecting fuel pressure gauge to quick connector type fuel lines.
(J-45488) Quick connector release	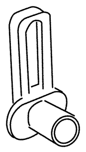 PBIC0198E	Remove fuel tube quick connectors in engine room.

Tool number (Kent-Moore No.) Tool name	Description
KV109E0010 (J-46209) Break-out box 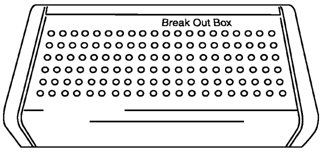 S-NT825	Measuring ECM signals with a circuit tester
KV109E0080 (J-45819) Y-cable adapter 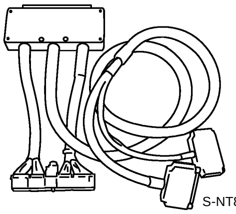 S-NT826	Measuring ECM signals with a circuit tester

Commercial Service Tools

ABS00CKS

Tool name (Kent-Moore No.)	Description
Leak detector i.e.:(J-41416) 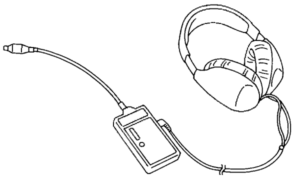 S-NT703	Locating the EVAP leak
EVAP service port adapter i.e.:(J-41413-OBD) 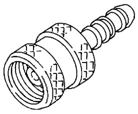 S-NT704	Applying positive pressure through EVAP service port
Fuel filler cap adapter i.e.: (J-41416) S-NT815	Checking fuel tank vacuum relief valve opening pressure
Socket wrench 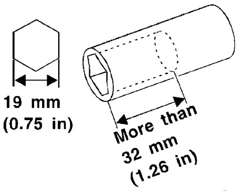 S-NT705	Removing and installing engine coolant temperature sensor

Tool name (Kent-Moore No.)	Description
Oxygen sensor thread cleaner i.e.: (J-43897-18) (J-43897-12) 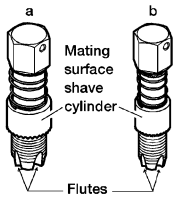 AEM488	Reconditioning the exhaust system threads before installing a new oxygen sensor. Use with anti-seize lubricant shown below. **a: 18 mm diameter with pitch 1.5 mm for Zirconia Oxygen Sensor** **b: 12 mm diameter with pitch 1.25 mm for Titania Oxygen Sensor**
Anti-seize lubricant i.e.: (Permatex^{TM} 133AR or equivalent meeting MIL specification MIL-A-907) 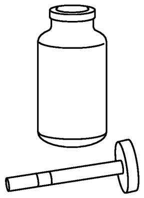 S-NT779	Lubricating oxygen sensor thread cleaning tool when reconditioning exhaust system threads.

ENGINE CONTROL SYSTEM

PFP:23710

System Diagram

ABS00CKT

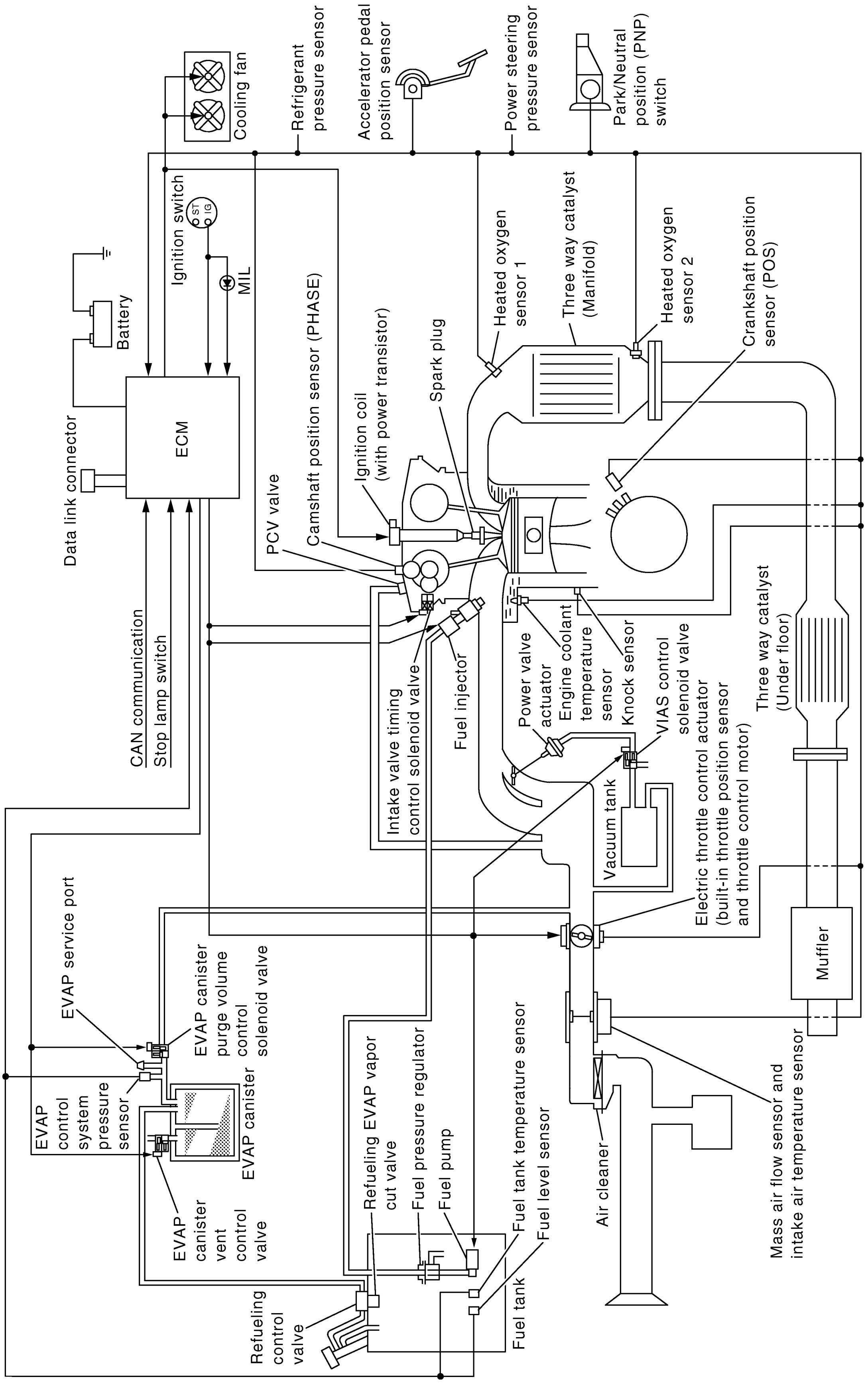

PBIB2361E

Multiport Fuel Injection (MFI) System

ABS00CKW

INPUT/OUTPUT SIGNAL CHART

Sensor	Input Signal to ECM	ECM function	Actuator
Crankshaft position sensor (POS)	Engine speed*3 Piston position	Fuel injection & mixture ratio control	Fuel injector
Camshaft position sensor (PHASE)			
Mass air flow sensor	Amount of intake air		
Engine coolant temperature sensor	Engine coolant temperature		
Throttle position sensor	Throttle position		
Accelerator pedal position sensor	Accelerator pedal position		
Park/neutral position (PNP) switch	Gear position		
Knock sensor	Engine knocking condition		
Power steering pressure sensor	Power steering operation		
Heated oxygen sensor 1	Density of oxygen in exhaust gas		
Heated oxygen sensor 2*1	Density of oxygen in exhaust gas		
Wheel sensor*2	Vehicle speed		
Air conditioner switch	Air conditioner operation		
Battery	Battery voltage*3		

*1: This sensor is not used to control the engine system under normal conditions.
*2: This signal is sent to the ECM through CAN communication line.
*3: ECM determines the start signal status by the signal of engine speed and battery voltage.

SYSTEM DESCRIPTION

The amount of fuel injected from the fuel injector is determined by the ECM. The ECM controls the length of time the valve remains open (injection pulse duration). The amount of fuel injected is a program value in the ECM memory. The program value is preset by engine operating conditions. These conditions are determined by input signals (for engine speed and intake air) from both the crankshaft position sensor and the mass air flow sensor.

VARIOUS FUEL INJECTION INCREASE/DECREASE COMPENSATION

In addition, the amount of fuel injected is compensated to improve engine performance under various operating conditions as listed below.

<Fuel increase>

- During warm-up
- When starting the engine
- During acceleration
- Hot-engine operation
- When selector lever is changed from N to D (A/T models)
- High-load, high-speed operation

<Fuel decrease>

- During deceleration
- During high engine speed operation

MIXTURE RATIO FEEDBACK CONTROL (CLOSED LOOP CONTROL)

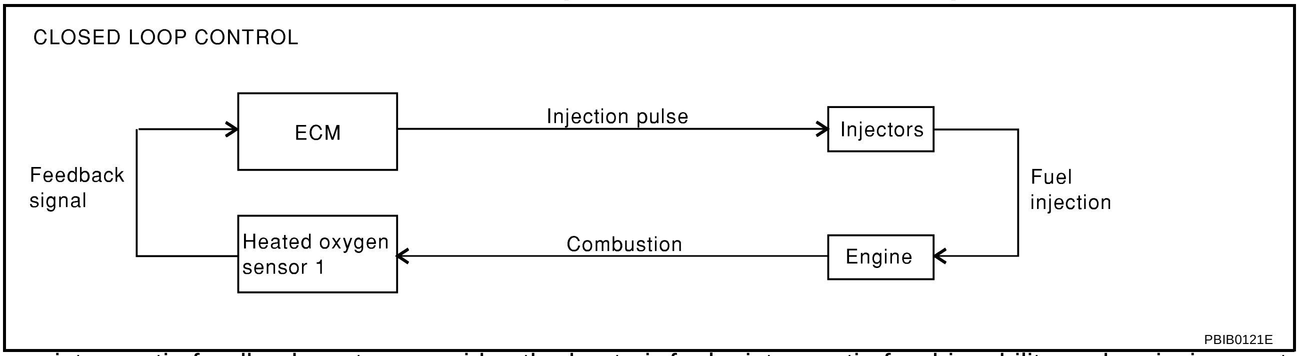

The mixture ratio feedback system provides the best air-fuel mixture ratio for driveability and emission control. The three way catalyst (manifold) can then better reduce CO, HC and NOx emissions. This system uses heated oxygen sensor 1 in the exhaust manifold to monitor whether the engine operation is rich or lean. The ECM adjusts the injection pulse width according to the sensor voltage signal. For more information about heated oxygen sensor 1, refer to EC-226 . This maintains the mixture ratio within the range of stoichiometric (ideal air-fuel mixture).
This stage is referred to as the closed loop control condition.
Heated oxygen sensor 2 is located downstream of the three way catalyst (manifold). Even if the switching characteristics of heated oxygen sensor 1 shift, the air-fuel ratio is controlled to stoichiometric by the signal from heated oxygen sensor 2.

Open Loop Control

The open loop system condition refers to when the ECM detects any of the following conditions. Feedback control stops in order to maintain stabilized fuel combustion.

- Deceleration and acceleration
- High-load, high-speed operation
- Malfunction of heated oxygen sensor 1 or its circuit
- Insufficient activation of heated oxygen sensor 1 at low engine coolant temperature
- High engine coolant temperature
- During warm-up
- After shifting from N to D (A/T models)
- When starting the engine

MIXTURE RATIO SELF-LEARNING CONTROL

The mixture ratio feedback control system monitors the mixture ratio signal transmitted from heated oxygen sensor 1. This feedback signal is then sent to the ECM. The ECM controls the basic mixture ratio as close to the theoretical mixture ratio as possible. However, the basic mixture ratio is not necessarily controlled as originally designed. Both manufacturing differences (i.e., mass air flow sensor hot wire) and characteristic changes during operation (i.e., injector clogging) directly affect mixture ratio.
Accordingly, the difference between the basic and theoretical mixture ratios is monitored in this system. This is then computed in terms of “injection pulse duration” to automatically compensate for the difference between the two ratios.
“Fuel trim” refers to the feedback compensation value compared against the basic injection duration. Fuel trim includes short term fuel trim and long term fuel trim.
“Short term fuel trim” is the short-term fuel compensation used to maintain the mixture ratio at its theoretical value. The signal from heated oxygen sensor 1 indicates whether the mixture ratio is RICH or LEAN compared to the theoretical value. The signal then triggers a reduction in fuel volume if the mixture ratio is rich, and an increase in fuel volume if it is lean.
“Long term fuel trim” is overall fuel compensation carried out long-term to compensate for continual deviation of the short term fuel trim from the central value. Such deviation will occur due to individual engine differences, wear over time and changes in the usage environment.

FUEL INJECTION TIMING

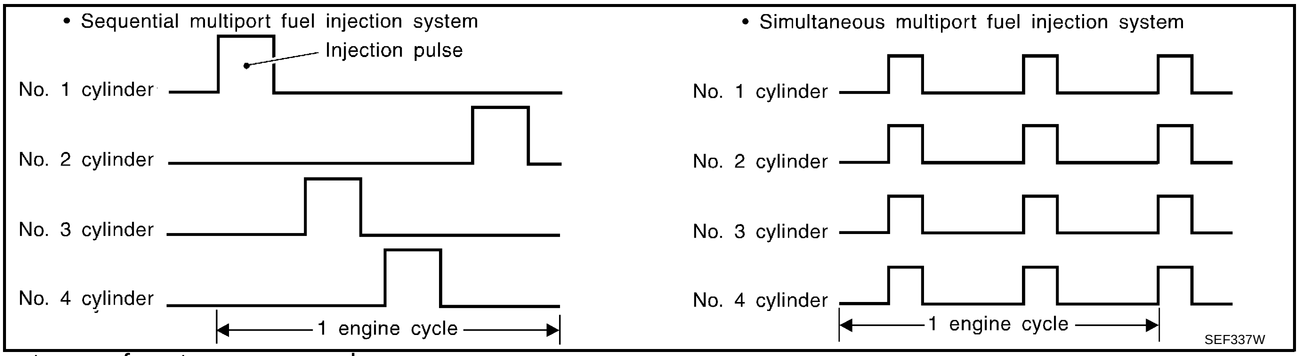

Two types of systems are used.

Sequential Multiport Fuel Injection System

Fuel is injected into each cylinder during each engine cycle according to the firing order. This system is used when the engine is running.

Simultaneous Multiport Fuel Injection System

Fuel is injected simultaneously into all four cylinders twice each engine cycle. In other words, pulse signals of the same width are simultaneously transmitted from the ECM.
The four injectors will then receive the signals two times for each engine cycle.
This system is used when the engine is being started and/or if the fail-safe system (CPU) is operating.

FUEL SHUT-OFF

Fuel to each cylinder is cut off during deceleration or operation of the engine at excessively high speeds.

Electronic Ignition (EI) System

ABS00CKX

INPUT/OUTPUT SIGNAL CHART

Sensor	Input Signal to ECM	ECM function	Actuator
Crankshaft position sensor (POS)	Engine speed*2 Piston position	Ignition timing control	Power transistor
Camshaft position sensor (PHASE)			
Mass air flow sensor	Amount of intake air		
Engine coolant temperature sensor	Engine coolant temperature		
Throttle position sensor	Throttle position		
Accelerator pedal position sensor	Accelerator pedal position		
Knock sensor	Engine knocking		
Park/neutral position (PNP) switch	Gear position		
Wheel sensor*1	Vehicle speed		
Battery	Battery voltage*2		

*1: This signal is sent to the ECM through CAN communication line.

*2: ECM determines the start signal status by the signal of engine speed and battery voltage.

SYSTEM DESCRIPTION

Firing order: 1-3-4-2
The ignition timing is controlled by the ECM to maintain the best air-fuel ratio for every running condition of the engine. The ignition timing data is stored in the ECM.
The ECM receives information such as the injection pulse width and camshaft position sensor (PHASE) signal. Computing this information, ignition signals are transmitted to the power transistor.
During the following conditions, the ignition timing is revised by the ECM according to the other data stored in the ECM.

- At starting
- During warm-up
- At idle
- At low battery voltage

- During acceleration

The knock sensor retard system is designed only for emergencies. The basic ignition timing is programmed within the anti-knocking zone, if recommended fuel is used under dry conditions. The retard system does not operate under normal driving conditions. If engine knocking occurs, the knock sensor monitors the condition. The signal is transmitted to the ECM. The ECM retards the ignition timing to eliminate the knocking condition.

Fuel Cut Control (at No Load and High Engine Speed)

ABS00CKZ

INPUT/OUTPUT SIGNAL CHART

Sensor	Input Signal to ECM	ECM function	Actuator
Park/neutral position (PNP) switch	Neutral position	Fuel cut control	Fuel injector
Accelerator pedal position sensor	Accelerator pedal position		
Engine coolant temperature sensor	Engine coolant temperature		
Crankshaft position sensor (POS) Camshaft position sensor (PHASE)	Engine speed		
Wheel sensor*	Vehicle speed		

*: This signal is sent to the ECM through CAN communication line.

SYSTEM DESCRIPTION

If the engine speed is above 1,800 rpm under no load (for example, the shift position is neutral and engine speed is over 1,800 rpm) fuel will be cut off after some time. The exact time when the fuel is cut off varies based on engine speed.
Fuel cut will be operated until the engine speed reaches 1,500 rpm, then fuel cut will be cancelled.

NOTE:
This function is different from deceleration control listed under EC-22, "Multiport Fuel Injection (MFI) System"

AIR CONDITIONING CUT CONTROL

PFP:23710

Input/Output Signal Chart

ABS00DCO

Sensor	Input Signal to ECM	ECM function	Actuator
Air conditioner switch	Air conditioner ON signal	Air conditioner cut control	Air conditioner relay
Throttle position sensor	Throttle position		
Accelerator pedal position sensor	Accelerator pedal position		
Crankshaft position sensor (POS) Camshaft position sensor (PHASE)	Engine speed*2		
Engine coolant temperature sensor	Engine coolant temperature		
Refrigerant pressure sensor	Refrigerant pressure		
Power steering pressure sensor	Power steering operation		
Wheel sensor*1	Vehicle speed		
Battery	Battery voltage*2		

*1: This signal is sent to the ECM through CAN communication line.

*2: ECM determines the start signal status by the signal of engine speed and battery voltage.

SYSTEM DESCRIPTION

This system improves engine operation when the air conditioner is used.
Under the following conditions, the air conditioner is turned OFF.

- When the accelerator pedal is fully depressed.
- When cranking the engine.
- At high engine speeds.
- When the engine coolant temperature becomes excessively high.
- When operating power steering during low engine speed or low vehicle speed.
- When engine speed is excessively low.
- When refrigerant pressure is excessively low or high.

AUTOMATIC SPEED CONTROL DEVICE (ASCD)

PFP:18930

System Description

ABS00D04

INPUT/OUTPUT SIGNAL CHART

Sensor	Input signal to ECM	ECM function	Actuator
ASCD brake switch	Brake pedal operation	ASCD vehicle speed control	Electric throttle control actuator
Stop lamp switch	Brake pedal operation		
ASCD clutch switch (M/T models)	Clutch pedal operation		
ASCD steering switch	ASCD steering switch operation		
Park/Neutral position (PNP) switch	Gear position		
Wheel sensor*	Vehicle speed		
TCM (trans mission control module)*	Powertrain revolution		

*: This signal is sent to the ECM through CAN communication line.

BASIC ASCD SYSTEM

Refer to Owner's Manual for ASCD operating instructions.
Automatic Speed Control Device (ASCD) allows a driver to keep vehicle at predetermined constant speed without depressing accelerator pedal. Driver can set vehicle speed in advance between approximately 40 km/h (25 MPH) and 144 km/h (89 MPH).
ECM controls throttle angle of electric throttle control actuator to regulate engine speed.
Operation status of ASCD is indicated by CRUISE indicator and SET indicator in combination meter. If any malfunction occurs in ASCD system, it automatically deactivates control.

NOTE:
Always drive vehicle in safe manner according to traffic conditions and obey all traffic laws.

SET OPERATION

Press MAIN (CRUISE) switch. (The CRUISE indicator in combination meter illuminates.)
When vehicle speed reaches a desired speed between approximately 40 km/h (25 MPH) and 144 km/h (89 MPH), press SET/COAST switch. (Then SET indicator in combination meter illuminates.)

ACCEL OPERATION

If the RESUME/ACCEL switch is depressed during cruise control driving, increase the vehicle speed until the switch is released or vehicle speed reaches maximum speed controlled by the system.
And then ASCD will keep the new set speed.

CANCEL OPERATION

When any of following conditions exist, cruise operation will be canceled.

- CANCEL switch is depressed
- Brake pedal is depressed
- Clutch pedal is depressed or shift position is changed to the neutral position (M/T models)
- Selector lever is changed to N, P, R position (A/T models)
- Vehicle speed decreased to 13km/h (8MPH) lower than the set speed
- VDC/TCS system is operated

When the ECM detects any of the following conditions, the ECM will cancel the cruise operation and inform the driver by blinking indicator lamp.

- Engine coolant temperature is slightly higher than the normal operating temperature, CRUISE lamp may blink slowly.
  When the engine coolant temperature decreases to the normal operating temperature, CRUISE lamp will stop blinking and the cruise operation will be able to work by pressing SET/COAST switch or RESUME/ACCEL switch.
- Malfunction for some self-diagnoses regarding ASCD control: SET lamp will blink quickly.

COAST OPERATION

When the SET/COAST switch is depressed during cruise control driving, decrease vehicle set speed until the switch is released. And then ASCD will keep the new set speed.

RESUME OPERATION

When the RESUME/ACCEL switch is depressed after cancel operation other than depressing CRUISE switch is performed, vehicle speed will return to last set speed. To resume vehicle set speed, vehicle condition must meet following conditions.

- Brake pedal is released.
- Clutch pedal is released (M/T models)
- A/T selector lever is in other than P and N positions (A/T models)
- Vehicle speed is greater than 40 km/h (25 MPH) and less than 144 km/h (89 MPH)

Component Description

ABS00D05

ASCD STEERING SWITCH

Refer to EC-519 .

ASCD BRAKE SWITCH

Refer to EC-527 and EC-638 .

ASCD CLUTCH SWITCH

Refer to EC-527 .

STOP LAMP SWITCH

Refer to EC-527 , EC-550 and EC-638

ELECTRIC THROTTLE CONTROL ACTUATOR

Refer to EC-427 , EC-429 , EC-437 and EC-443 .

ASCD INDICATOR

Refer to EC-648 .

CAN COMMUNICATION

PFP:23710

System Description

ABS00DCQ

CAN (Controller Area Network) is a serial communication line for real time application. It is an on-vehicle multiplex communication line with high data communication speed and excellent error detection ability. Many electronic control units are equipped onto a vehicle, and each control unit shares information and links with other control units during operation (not independent). In CAN communication, control units are connected with 2 communication lines (CAN H line, CAN L line) allowing a high rate of information transmission with less wiring. Each control unit transmits/receives data but selectively reads required data only.

Refer to LAN-16, "CAN Communication Unit" , about CAN communication for detail.

EVAPORATIVE EMISSION SYSTEM

PFP:14950

Description

ABS00CZV

SYSTEM DESCRIPTION

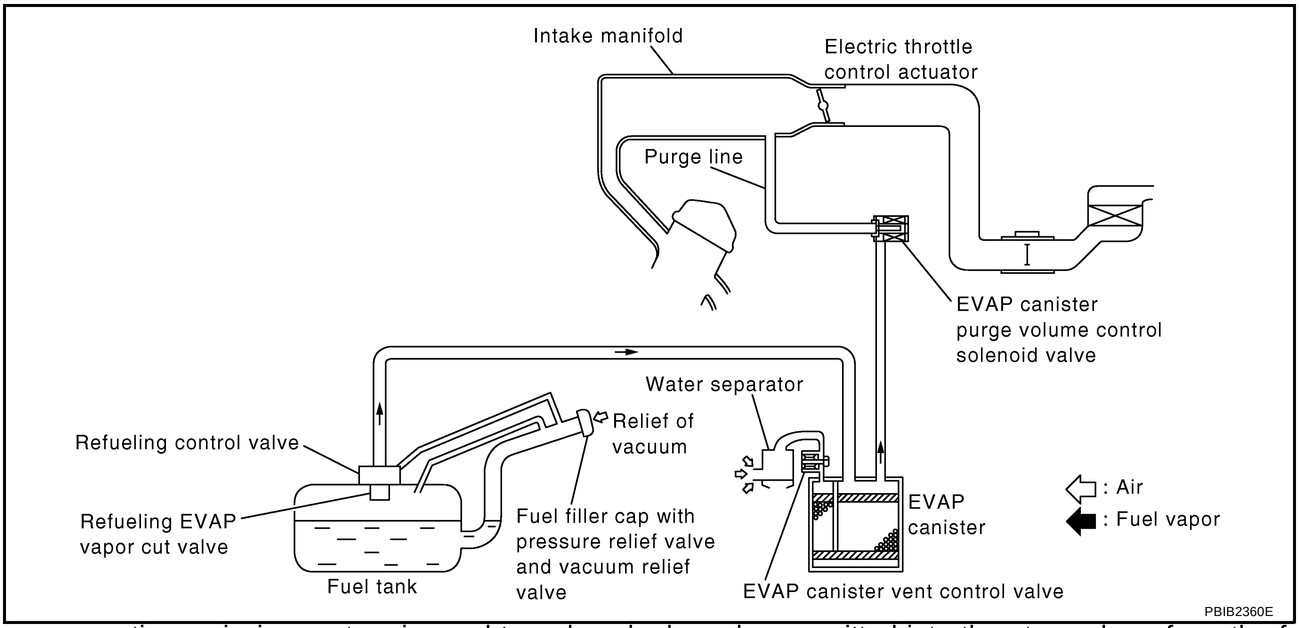

The evaporative emission system is used to reduce hydrocarbons emitted into the atmosphere from the fuel system. This reduction of hydrocarbons is accomplished by activated charcoals in the EVAP canister.

The fuel vapor in the sealed fuel tank is led into the EVAP canister which contains activated carbon and the vapor is stored there when the engine is not operating or when refueling to the fuel tank.

The vapor in the EVAP canister is purged by the air through the purge line to the intake manifold when the engine is operating. EVAP canister purge volume control solenoid valve is controlled by ECM. When the engine operates, the flow rate of vapor controlled by EVAP canister purge volume control solenoid valve is proportionally regulated as the air flow increases.

EVAP canister purge volume control solenoid valve also shuts off the vapor purge line during decelerating and idling.

EVAPORATIVE EMISSION LINE DRAWING

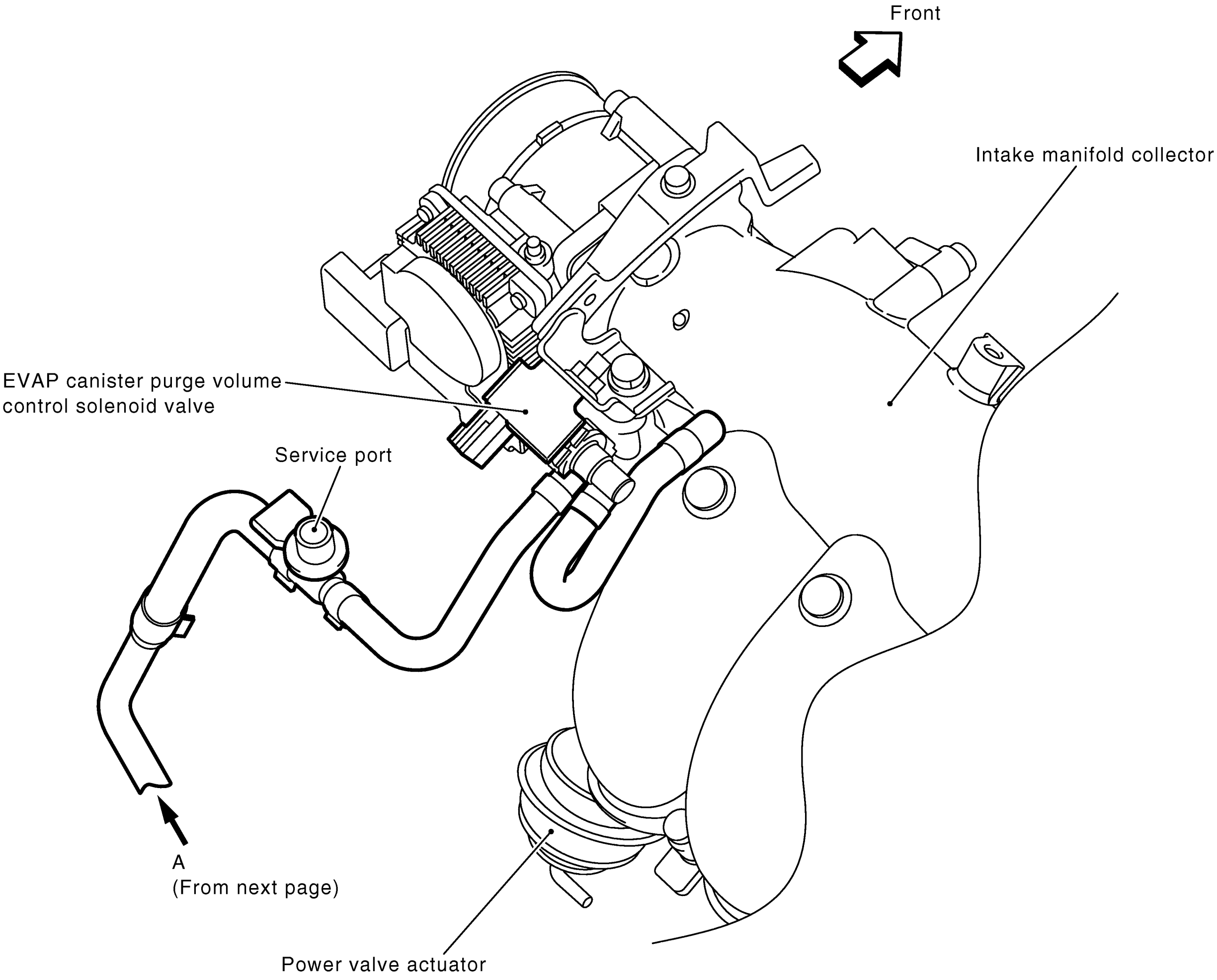

NOTE: Do not use soapy water or any type of solvent while installing vacuum hose or purge hoses.

PBIB2363E

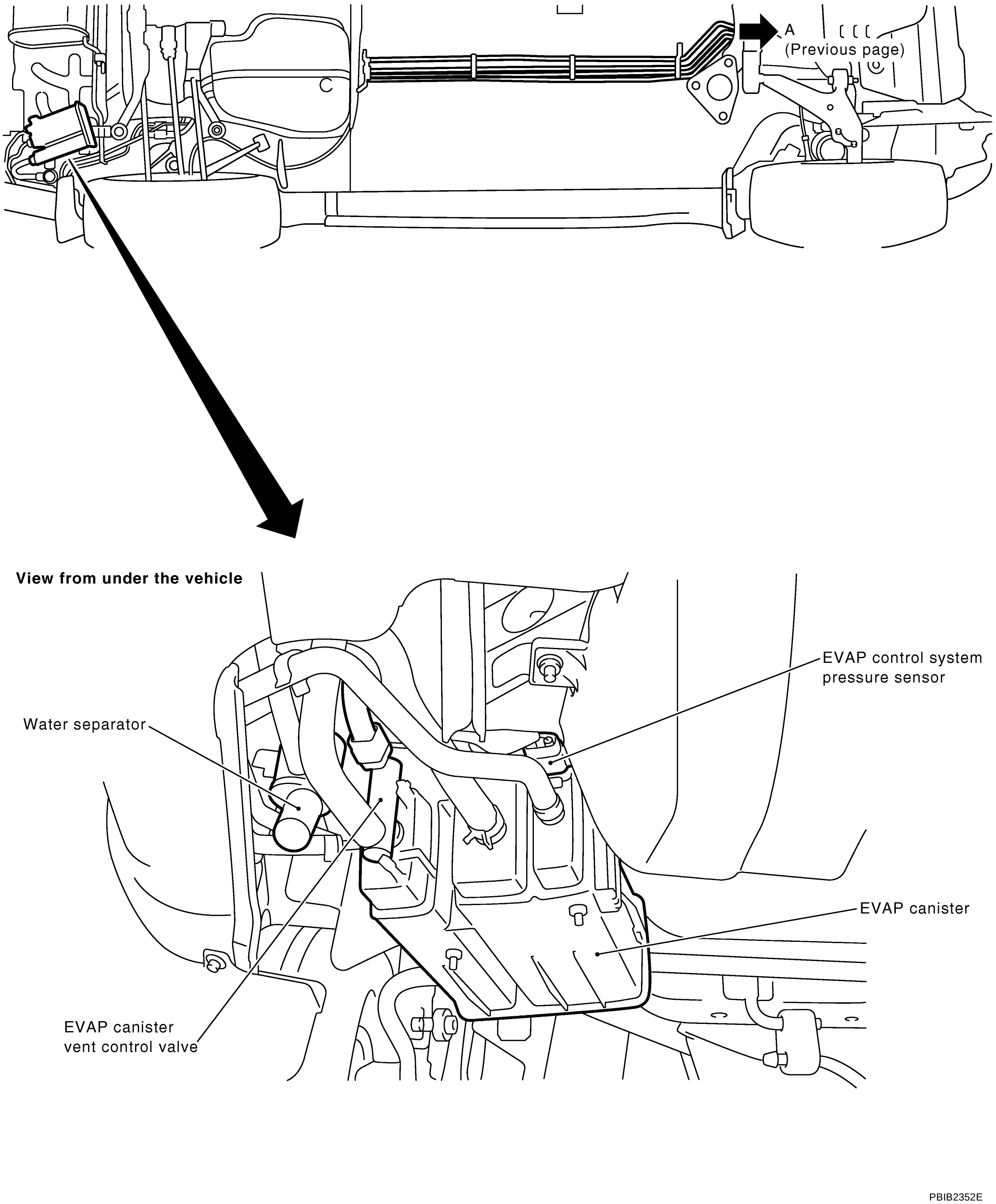
A
(Previous page)
C
View from under the vehicle
EVAP control system
pressure sensor
Water separator
EVAP canister
EVAP canister
vent control valve
PBIB2352E

Component Inspection

ABS00CZW

EVAP CANISTER

Check EVAP canister as follows:

1. Block port **B** .
2. Blow air into port **A** and check that it flows freely out of port **C** .
3. Release blocked port **B** .
4. Apply vacuum pressure to port **B** and check that vacuum pressure exists at the ports **A** and **C** .
5. Block port **A** and **B** .
6. Apply pressure to port **C** and check that there is no leakage.

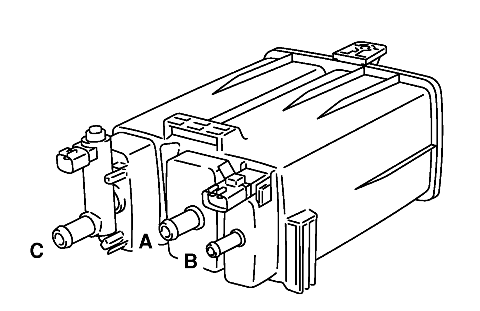

PBIB1044E

FUEL TANK VACUUM RELIEF VALVE (BUILT INTO FUEL FULLER CAP)

1. Wipe clean valve housing.

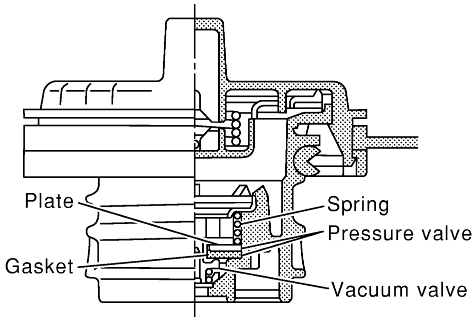

SEF445Y

2. Check valve opening pressure and vacuum.

Pressure: **15.3 - 20.0 kPa**
(0.156 - 0.204 kg/cm^2 , 2.22 - 2.90 psi)
Vacuum: **–6.0 to –3.4 kPa**
(–0.061 to –0.035 kg/cm^2 , –0.87 to –0.48 psi)

3. If out of specification, replace fuel filler cap as an assembly.

CAUTION:
Use only a genuine fuel filler cap as a replacement. If an incorrect fuel filler cap is used, the MIL may come on.

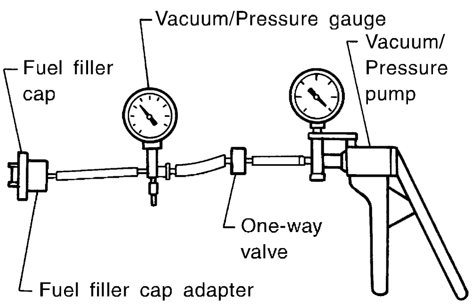

SEF943S

EVAP CANISTER PURGE VOLUME CONTROL SOLENOID VALVE

Refer to EC-353

FUEL TANK TEMPERATURE SENSOR

Refer to EC-284 .

EVAP CANISTER VENT CONTROL VALVE

Refer to EC-360 .

EVAP CONTROL SYSTEM PRESSURE SENSOR

Refer to EC-364 .

EVAP SERVICE PORT

Positive pressure is delivered to the EVAP system through the EVAP service port. If fuel vapor leakage in the EVAP system occurs, use a leak detector to locate the leak.

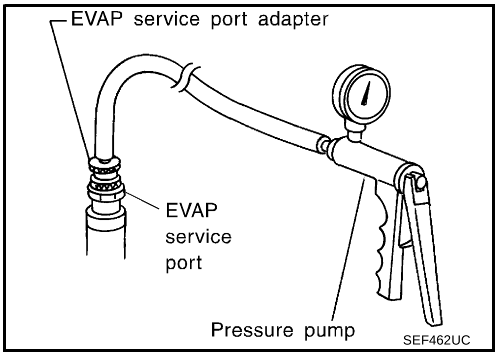

Removal and Installation

ABS00CZX

EVAP CANISTER

Tighten EVAP canister as shown in the figure.

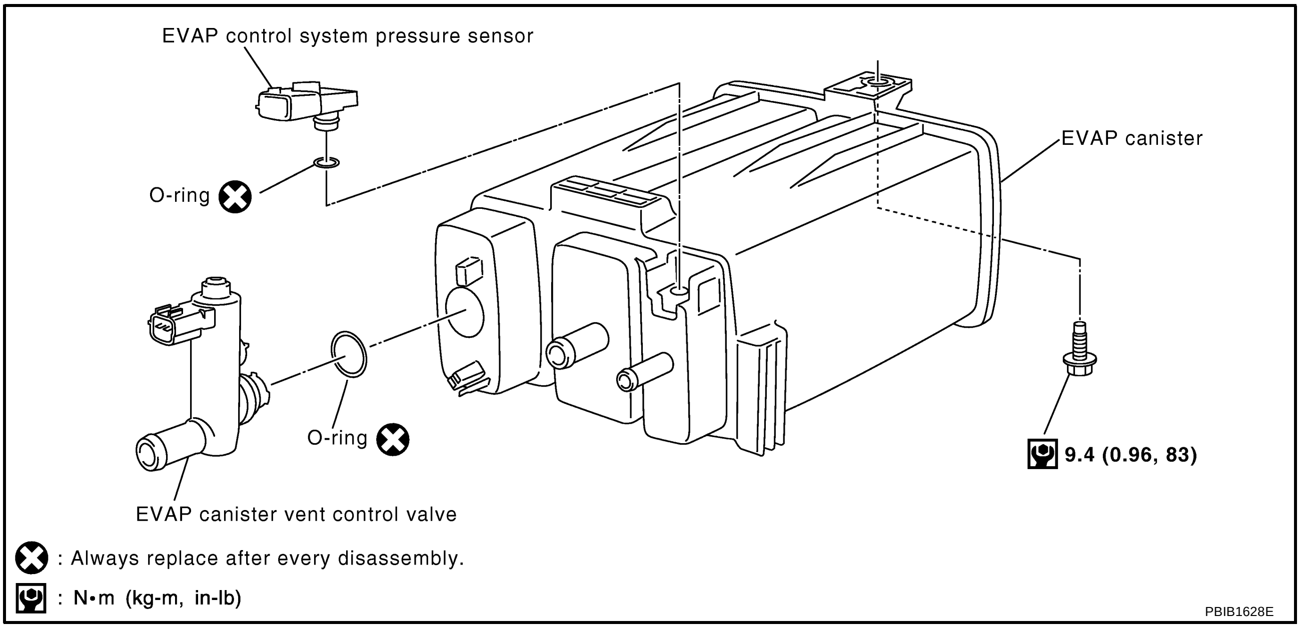

EVAP CANISTER VENT CONTROL VALVE

1. Turn EVAP canister vent control valve counterclockwise.
2. Remove the EVAP canister vent control valve.

Always replace O-ring with a new one.

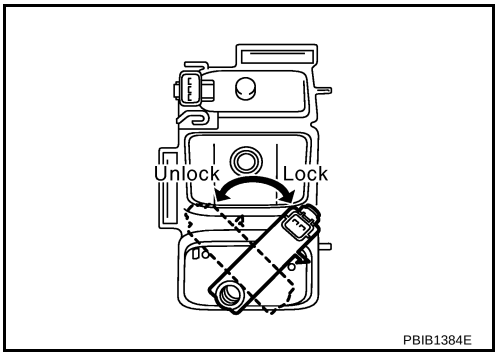

How to Detect Fuel Vapor Leakage

ABS00CZY

CAUTION:

- **Never use compressed air or a high pressure pump.**
- **Do not exceed 4.12 kPa (0.042 kg/cm^2 , 0.6 psi) of pressure in EVAP system.**

NOTE:

- Do not start engine.
- Improper installation of EVAP service port adapter to the EVAP service port may cause a leak.

A EC C D E F G H I J K L M

WITH CONSULT-II

1. Attach the EVAP service port adapter securely to the EVAP service port.
2. Also attach the pressure pump and hose to the EVAP service port adapter.
3. Turn ignition switch ON.
4. Select the “EVAP SYSTEM CLOSE” of “WORK SUPPORT MODE” with CONSULT-II.
5. Touch “START”. A bar graph (Pressure indicating display) will appear on the screen.

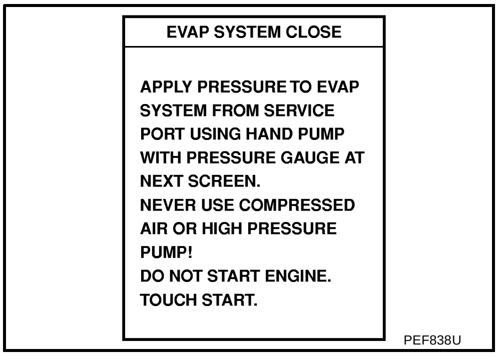

PEF838U

6. Apply positive pressure to the EVAP system until the pressure indicator reaches the middle of the bar graph.
7. Remove EVAP service port adapter and hose with pressure pump.

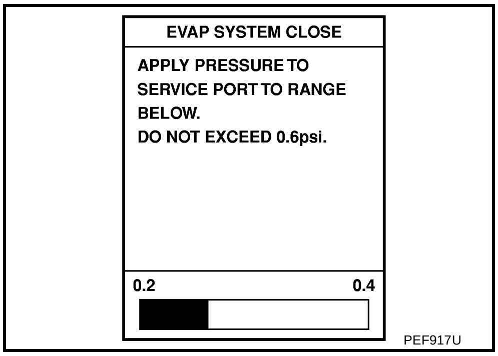

PEF917U

8. Locate the leak using a leak detector. Refer to EC-31, "EVAPORATIVE EMISSION LINE DRAWING" .

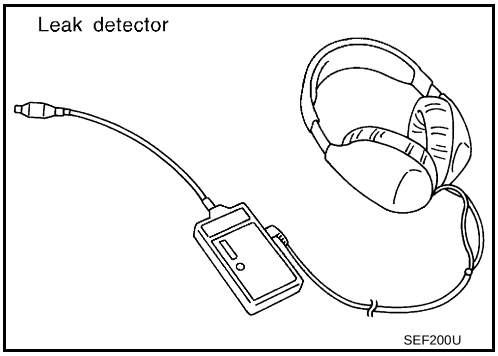

SEF200U

WITHOUT CONSULT-II

1. Attach the EVAP service port adapter securely to the EVAP service port.
2. Also attach the pressure pump with pressure gauge to the EVAP service port adapter.

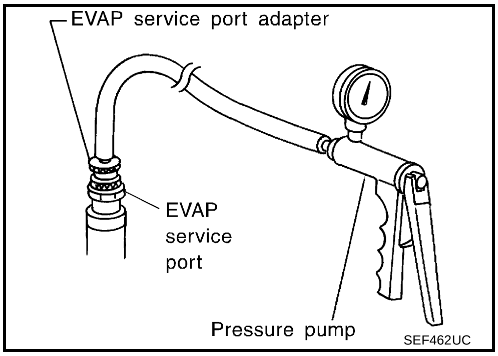

SEF462UC

3. Apply battery voltage between the terminals EVAP canister vent control valve to make a closed EVAP system.

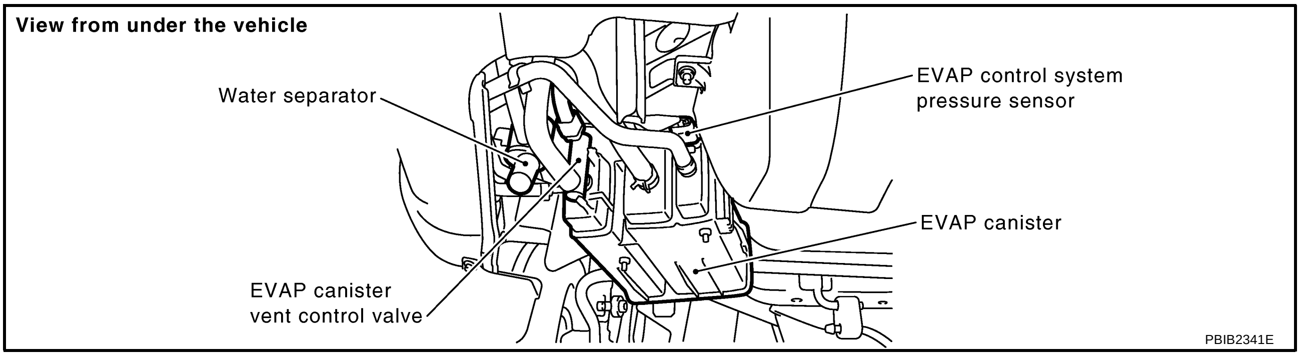

4. To locate the leak, deliver positive pressure to the EVAP system until pressure gauge points reach 1.38 to 2.76 kPa (0.014 to 0.028 kg/cm^2 , 0.2 to 0.4 psi).
5. Remove EVAP service port adapter and hose with pressure pump.
6. Locate the leak using a leak detector. Refer to EC-31, "EVAPORATIVE EMISSION LINE DRAWING"

ON BOARD REFUELING VAPOR RECOVERY (ORVR)

PFP:00032

System Description

ABS00CZZ

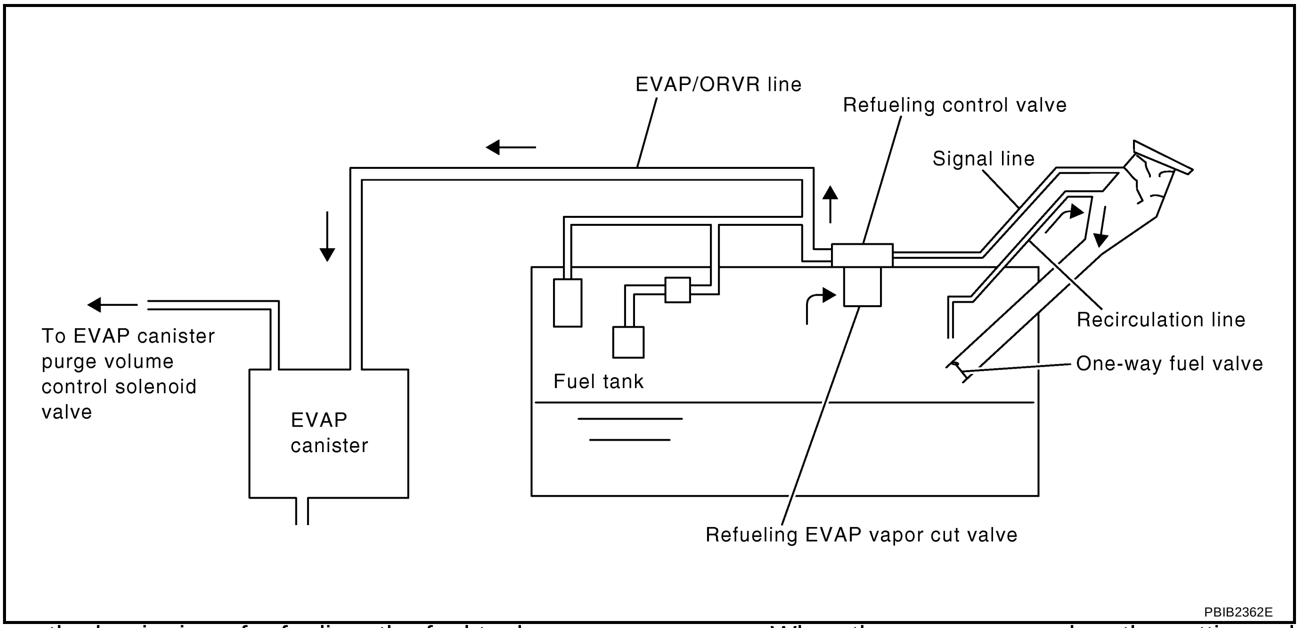

From the beginning of refueling, the fuel tank pressure goes up. When the pressure reaches the setting value of the refueling control valve (RCV) opening pressure, the RCV is opened. After RCV opens, the air and vapor inside the fuel tank go through refueling EVAP vapor cut valve, RCV and EVAP/ORVR line to the EVAP canister. The vapor is absorbed by the EVAP canister and the air is released to the atmosphere.

When the refueling has reached the full level of the fuel tank, the refueling EVAP vapor cut valve is closed and refueling is stopped because of auto shut-off. The vapor which was absorbed by the EVAP canister is purged during driving.

The RCV is always closed during driving and the evaporative emission control system is operated the same as conventional system.

WARNING:

When conducting inspections below, be sure to observe the following:

- **Put a “CAUTION: INFLAMMABLE” sign in workshop.**
- **Do not smoke while servicing fuel system. Keep open flames and sparks away from work area.**
- **Be sure to furnish the workshop with a CO_2 fire extinguisher.**

CAUTION:

- **Before removing fuel line parts, carry out the following procedures:**
  - **Put drained fuel in an explosion-proof container and put lid on securely.**
  - **Release fuel pressure from fuel line. Refer to EC-90, "FUEL PRESSURE RELEASE" .**
  - **Disconnect battery ground cable.**
- **Always replace O-ring when the fuel gauge retainer is removed.**
- **Do not kink or twist hose and tube when they are installed.**
- **Do not tighten hose and clamps excessively to avoid damaging hoses.**
- **After installation, run engine and check for fuel leaks at connection.**
- **Do not attempt to top off the fuel tank after the fuel pump nozzle shuts off automatically. Continued refueling may cause fuel overflow, resulting in fuel spray and possibly a fire.**

Diagnostic Procedure

ABS00D00

SYMPTOM: FUEL ODOR FROM EVAP CANISTER IS STRONG.

1. CHECK EVAP CANISTER

1. Remove EVAP canister with EVAP canister vent control valve and EVAP control system pressure sensor attached.
2. Weigh the EVAP canister with EVAP canister vent control valve and EVAP control system pressure sensor attached.
   The weight should be less than 2.5 kg (5.5 lb).

OK or NG

OK >> GO TO 2.
NG >> GO TO 3.

2. CHECK IF EVAP CANISTER SATURATED WITH WATER

Does water drain from the EVAP canister?

Yes or No

Yes >> GO TO 3.
No >> GO TO 5.

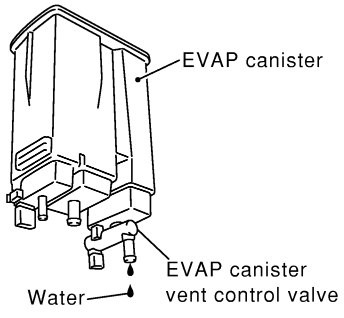

PBIB1031E

3. REPLACE EVAP CANISTER

Replace EVAP canister with a new one.

>> GO TO 4.

4. CHECK WATER SEPARATOR

Refer to EC-41, "Component Inspection" .

OK or NG

OK >> GO TO 5.
NG >> Replace water separator.

5. DETECT MALFUNCTIONING PART

Check the EVAP hose between EVAP canister and water separator for clogging or poor connection.

>> Repair or replace EVAP hose.

6. CHECK REFUELING CONTROL VALVE

Refer to EC-41, "Component Inspection" .

OK or NG

OK >> GO TO 7.
NG >> Replace refueling control valve.

7. CHECK REFUELING EVAP VAPOR CUT VALVE

Refer to EC-41, "Component Inspection" .

OK or NG

OK >> **INSPECTION END**
NG >> Replace refueling EVAP vapor cut valve with fuel tank.

SYMPTOM: CANNOT REFUEL/FUEL ODOR FROM THE FUEL FILLER OPENING IS STRONG WHILE REFUELING.

1. CHECK EVAP CANISTER

1. Remove EVAP canister with EVAP canister vent control valve and EVAP control system pressure sensor attached.
2. Weigh the EVAP canister with EVAP canister vent control valve and EVAP control system pressure sensor attached.
   The weight should be less than 2.5 kg (5.5 lb).

OK or NG

OK >> GO TO 2.
NG >> GO TO 3.

2. CHECK IF EVAP CANISTER SATURATED WITH WATER

Does water drain from the EVAP canister?

Yes or No

Yes >> GO TO 3.
No >> GO TO 6.

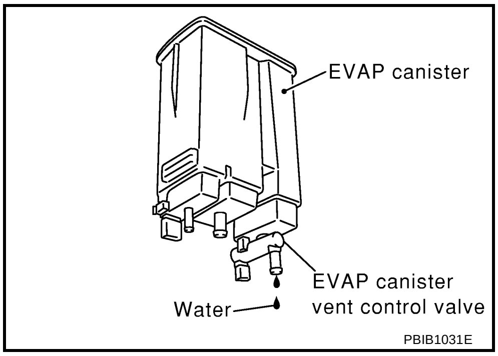

3. REPLACE EVAP CANISTER

Replace EVAP canister with a new one.

>> GO TO 4.

4. CHECK WATER SEPARATOR

Refer to EC-42, "WATER SEPARATOR" .

OK or NG

OK >> GO TO 5
NG >> Replace water separator.

5. DETECT MALFUNCTIONING PART

Check the EVAP hose between EVAP canister and vehicle water separator for clogging or poor connection.

>> Repair or replace EVAP hose.

6. CHECK VENT HOSES AND VENT TUBES

Check hoses and tubes between EVAP canister and refueling EVAP vapor cut valve for clogging, kink, looseness and improper connection.

OK or NG

OK >> GO TO 7.
NG >> Repair or replace hoses and tubes.

7. CHECK FILLER NECK TUBE

Check recirculation line for clogging, dents and cracks.

OK or NG

OK >> GO TO 8.
NG >> Replace filler neck tube.

8. CHECK REFUELING CONTROL VALVE

Refer to EC-41, "Component Inspection" .

OK or NG

OK >> GO TO 9.
NG >> Replace refueling control valve.

9. CHECK REFUELING EVAP VAPOR CUT VALVE

Refer to EC-41, "Component Inspection" .

OK or NG

OK >> GO TO 10.
NG >> Replace refueling EVAP vapor cut valve with fuel tank.

10. CHECK FUEL FILLER TUBE

Check filler neck tube and hose connected to the fuel tank for clogging, dents and cracks.

OK or NG

OK >> GO TO 11.
NG >> Replace fuel filler tube.

11. CHECK ONE-WAY FUEL VALVE-I

Check one-way valve for clogging.

OK or NG

OK >> GO TO 12.
NG >> Repair or replace one-way fuel valve with fuel tank.

12. CHECK ONE-WAY FUEL VALVE-II

1. Make sure that fuel is drained from the tank.
2. Remove fuel filler tube and hose.
3. Check one-way fuel valve for operation as follows.
   When a stick is inserted, the valve should open, when removing stick it should close.
   Do not drop any material into the tank.

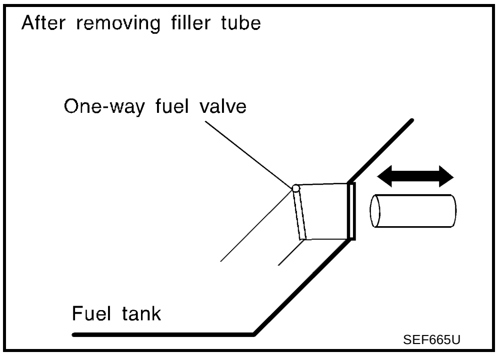

OK or NG

OK >> **INSPECTION END**
NG >> Replace fuel filler tube or replace one-way fuel valve with fuel tank.

Component Inspection
ABS00D01

REFUELING EVAP VAPOR CUT VALVE

With CONSULT-II

1. Remove fuel tank. Refer to FL-11, "FUEL TANK" .
2. Drain fuel from the tank as follows:
a. Remove fuel feed hose located on the fuel gauge retainer.
b. Connect a spare fuel hose, one side to fuel gauge retainer where the hose was removed and the other side to a fuel container.
c. Drain fuel using “FUEL PUMP RELAY” in “ACTIVE TEST” mode with CONSULT-II.
3. Check refueling EVAP vapor cut valve for being stuck to close as follows.
Blow air into the refueling EVAP vapor cut valve (from the end of EVAP/ORVR line hose), and check that the air flows freely into the tank.
4. Check refueling EVAP vapor cut valve for being stuck to open as follows.
a. Connect vacuum pump to hose end.
b. Remove fuel gauge retainer with fuel gauge unit.
Always replace O-ring with new one.
c. Put fuel tank upside down.
d. Apply vacuum pressure to hose end [–13.3 kPa (–100 mmHg, –3.94 inHg)] with fuel gauge retainer remaining open and check that the pressure is applicable.

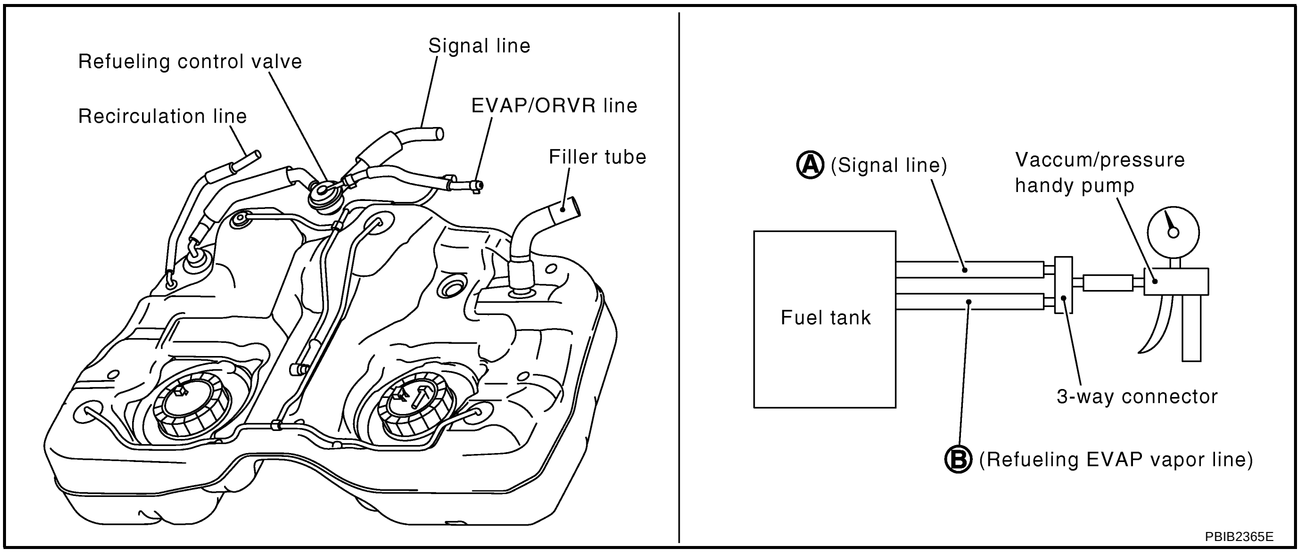

PBIB2365E

Without CONSULT-II

1. Remove fuel tank. Refer to FL-11, "FUEL TANK" .
2. Drain fuel from the tank as follows:
a. Remove fuel gauge retainer.
b. Drain fuel from the tank using a handy pump into a fuel container.
3. Check refueling EVAP vapor cut valve for being stuck to close as follows.
Blow air into the refueling EVAP vapor cut valve (from the end of EVAP/ORVR line hose), and check that the air flows freely into the tank.
4. Check refueling EVAP vapor cut valve for being stuck to open as follows.
a. Connect vacuum pump to hose end.
b. Remove fuel gauge retainer with fuel gauge unit.
Always replace O-ring with new one.
c. Put fuel tank upside down.

d. Apply vacuum pressure to hose end [–13.3 kPa (–100 mmHg, –3.94 inHg)] with fuel gauge retainer remaining open and check that the pressure is applicable.

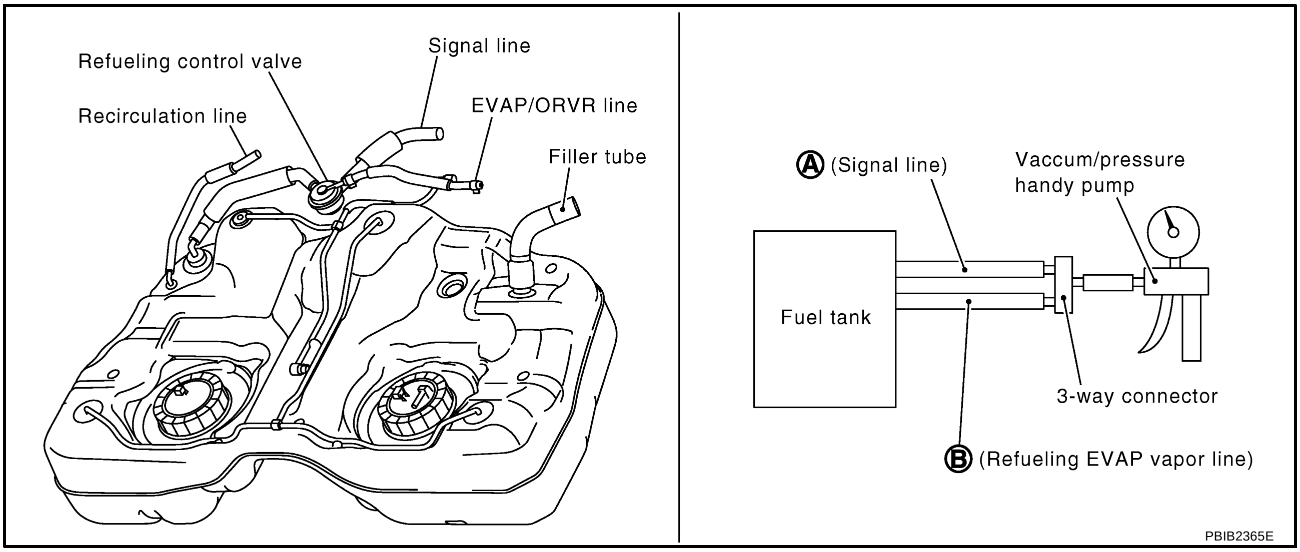

REFUELING CONTROL VALVE

1. Remove fuel filler cap.
2. Check air continuity between hose ends A and B.
   Blow air into the hose end B. Air should flow freely into the fuel tank.
3. Blow air into hose end A and check there is no leakage.
4. Apply pressure to both hose ends A and B [20 kPa (150 mmHg, 5.91 inHg)] using a pressure pump and a suitable 3-way connector. Check that there is no leakage.

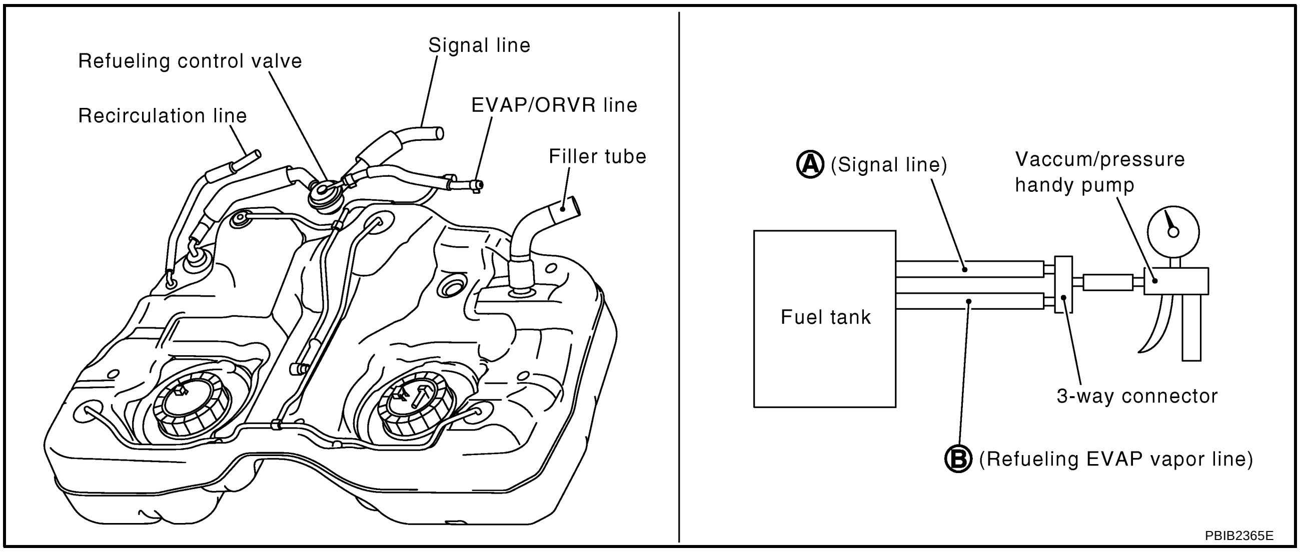

WATER SEPARATOR

1. Check visually for insect nests in the water separator air inlet.
2. Check visually for cracks or flaws in the appearance.
3. Check visually for cracks or flaws in the hose.

4. Check that **A** and **C** are not clogged by blowing air into **B** with **A** , and then **C** plugged.
5. In case of NG in items 2 - 4, replace the parts.

NOTE:
- Do not disassemble water separator.

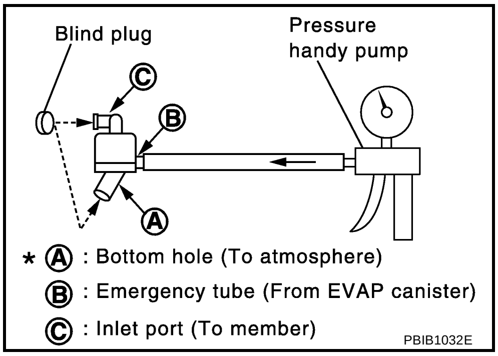

POSITIVE CRANKCASE VENTILATION

PFP:11810

Description

ABS00D02

SYSTEM DESCRIPTION

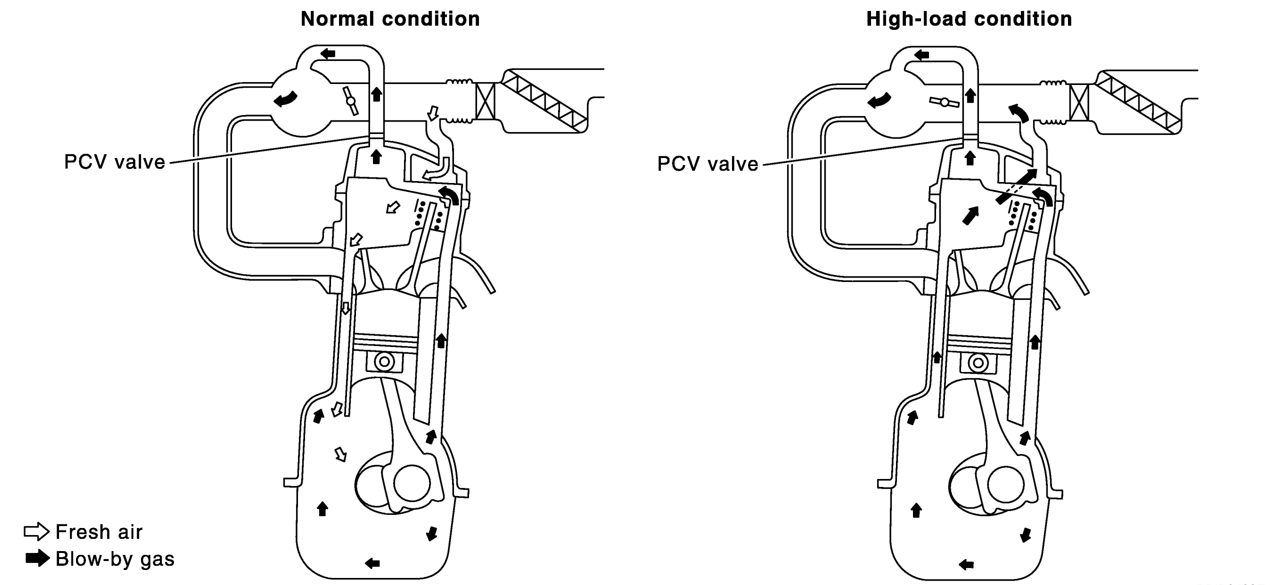

PBIB0492E

This system returns blow-by gas to the intake manifold.

The positive crankcase ventilation (PCV) valve is provided to conduct crankcase blow-by gas to the intake manifold. During partial throttle operation of the engine, the intake manifold sucks the blow-by gas through the PCV valve. Normally, the capacity of the valve is sufficient to handle any blow-by and a small amount of ventilating air. The ventilating air is then drawn from the air inlet tubes into the crankcase. In this process the air passes through the hose connecting air inlet tubes to rocker cover. Under full-throttle condition, the manifold vacuum is insufficient to draw the blow-by flow through the valve. The flow goes through the hose connection in the reverse direction.

On vehicles with an excessively high blow-by, the valve does not meet the requirement. This is because some of the flow will go through the hose connection to the air inlet tubes under all conditions.

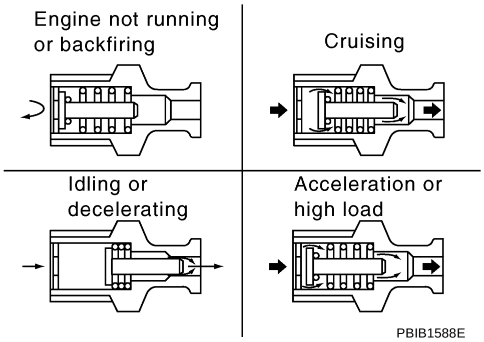

PBIB1588E

Component Inspection

ABS00D03

PCV (POSITIVE CRANKCASE VENTILATION) VALVE

With engine running at idle, remove PCV valve from rocker cover. A properly working valve makes a hissing noise as air passes through it. A strong vacuum should be felt immediately when a finger is placed over valve inlet.

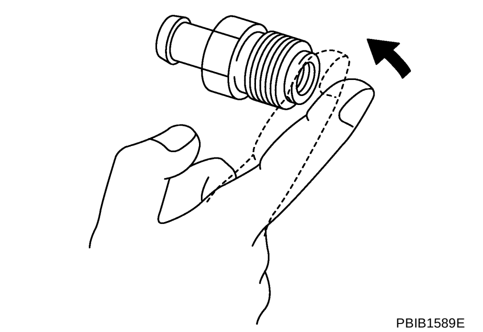
PBIB1589E

PCV VALVE VENTILATION HOSE

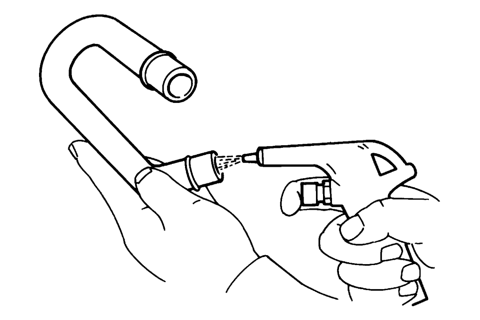
S-ET277

1. Check hoses and hose connections for leaks.
2. Disconnect all hoses and clean with compressed air. If any hose cannot be freed of obstructions, replace.

NVIS (NISSAN VEHICLE IMMOBILIZER SYSTEM-NATS)

PFP:25386

Description

ABS00DCR

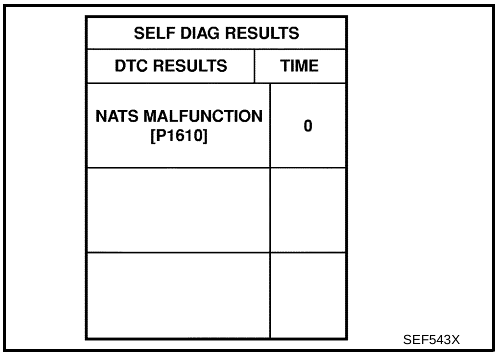

- **If the security indicator lights up with the ignition switch in the ON position or “NATS MALFUNCTION” is displayed on “SELF-DIAG RESULTS” screen, perform self-diagnostic results mode with CONSULT-II using NATS program card. Refer to BL-97, "NVIS (NISSAN VEHICLE IMMOBILIZER SYSTEM-NATS)" .**
- **Confirm no self-diagnostic results of NVIS (NATS) is displayed before touching “ERASE” in “SELF-DIAG RESULTS” mode with CONSULT-II.**
- **When replacing ECM, initialization of NVIS (NATS) system and registration of all NVIS (NATS) ignition key IDs must be carried out with CONSULT-II using NATS program card.**
  Therefore, be sure to receive all keys from vehicle owner. Regarding the procedures of NVIS (NATS) initialization and all NVIS (NATS) ignition key ID registration, refer to CONSULT-II Operation Manual, IVIS/NVIS.

ON BOARD DIAGNOSTIC (OBD) SYSTEM

PFP:00028

Introduction

ABS00CL7

The ECM has an on board diagnostic system, which detects malfunctions related to engine sensors or actuators. The ECM also records various emission-related diagnostic information including:

Emission-related diagnostic information	Diagnostic service
Diagnostic Trouble Code (DTC)	Service $03 of SAE J1979
Freeze Frame data	Service $02 of SAE J1979
System Readiness Test (SRT) code	Service $01 of SAE J1979
1st Trip Diagnostic Trouble Code (1st Trip DTC)	Service $07 of SAE J1979
1st Trip Freeze Frame data	
Test values and Test limits	Service $06 of SAE J1979
Calibration ID	Service $09 of SAE J1979

The above information can be checked using procedures listed in the table below.

×: Applicable —: Not applicable

	DTC	1st trip DTC	Freeze Frame data	1st trip Freeze Frame data	SRT status	SRT code	Test value
CONSULT-II	×	×	×	×	×	×	—
GST	×	×	×	—	×	×	×
ECM	×	×*	—	—	×	—	—

*: When DTC and 1st trip DTC simultaneously appear on the display, they cannot be clearly distinguished from each other.

The malfunction indicator lamp (MIL) on the instrument panel lights up when the same malfunction is detected in two consecutive trips (Two trip detection logic), or when the ECM enters fail-safe mode. (Refer to EC-102 .)

Two Trip Detection Logic

ABS00CL8

When a malfunction is detected for the 1st time, 1st trip DTC and 1st trip Freeze Frame data are stored in the ECM memory. The MIL will not light up at this stage. <1st trip>
If the same malfunction is detected again during the next drive, the DTC and Freeze Frame data are stored in the ECM memory, and the MIL lights up. The MIL lights up at the same time when the DTC is stored. <2nd trip> The "trip" in the "Two Trip Detection Logic" means a driving mode in which self-diagnosis is performed during vehicle operation. Specific on board diagnostic items will cause the ECM to light up or blink the MIL, and store DTC and Freeze Frame data, even in the 1st trip, as shown below.

×: Applicable —: Not applicable

Items	MIL				DTC		1st trip DTC	
	1st trip		2nd trip		1st trip displaying	2nd trip displaying	1st trip displaying	2nd trip displaying
	Blinking	Lighting up	Blinking	Lighting up				
Misfire (Possible three way catalyst damage) — DTC: P0300 - P0304 is being detected	×	—	—	—	—	—	×	—
Misfire (Possible three way catalyst damage) — DTC: P0300 - P0304 is being detected	—	—	×	—	—	×	—	—
One trip detection diagnoses (Refer to EC-48 .)	—	×	—	—	×	—	—	—
Except above	—	—	—	×	—	×	×	—

When there is an open circuit on MIL circuit, the ECM cannot warn the driver by lighting MIL up when there is malfunction on engine control system.
Therefore, when electrical controlled throttle and part of ECM related diagnoses are continuously detected as NG for 5 trips, ECM warns the driver that engine control system malfunctions and MIL circuit is open by means of operating fail-safe function.

A
EC
C
D
E
F
G
H
I
J
K
L
M

The fail-safe function also operates when above diagnoses except MIL circuit are detected, and demands the driver to repair the malfunction.

Engine operating condition in fail-safe mode	Engine speed will not rise more than 2,500 rpm due to the fuel cut

Emission-Related Diagnostic Information

ABS00CL9

EMISSION-RELATED DIAGNOSTIC INFORMATION ITEMS

×: Applicable —: Not applicable

Items (CONSULT-II screen terms)	DTC*[1]		SRT code	Test value/ Test limit (GST only)	Trip	MIL lighting up	Reference page
	CONSULT-II GST*[2]	ECM*[3]					
CAN COMM CIRCUIT	U1000	1000*[6]	—	—	1 (A/T) 2 (M/T)	× —	EC-162
CAN COMM CIRCUIT	U1001	1001*[6]	—	—	2	—	EC-162
NO DTC IS DETECTED. FURTHER TESTING MAY BE QUIRED.	**P0000**	**0000**	—	—	—	**Flashing*[7] *[8]**	EC-62
INT/V TIM CONT-B1	P0011	0011	—	—	2	×	EC-165
HO2S1 HTR (B1)	P0031	0031	×	×	2	×	EC-169
HO2S1 HTR (B1)	P0032	0032	×	×	2	×	EC-169
HO2S2 HTR (B1)	P0037	0037	×	×	2	×	EC-175
HO2S2 HTR (B1)	P0038	0038	×	×	2	×	EC-175
MAF SEN/CIRCUIT	P0101	0101	—	—	2	×	EC-181
MAF SEN/CIRCUIT	P0102	0102	—	—	1	×	EC-190
MAF SEN/CIRCUIT	P0103	0103	—	—	1	×	EC-190
IAT SEN/CIRCUIT	P0112	0112	—	—	2	×	EC-198
IAT SEN/CIRCUIT	P0113	0113	—	—	2	×	EC-198
ECT SEN/CIRCUIT	P0117	0117	—	—	1	×	EC-204
ECT SEN/CIRCUIT	P0118	0118	—	—	1	×	EC-204
TP SEN 2/CIRC	P0122	0122	—	—	1	×	EC-210
TP SEN 2/CIRC	P0123	0123	—	—	1	×	EC-210
ECT SENSOR	P0125	0125	—	—	1	×	EC-218
IAT SENSOR	P0127	0127	—	—	2	×	EC-221
THERMSTAT FNCTN	P0128	0128	—	—	2	×	EC-224
HO2S1 (B1)	P0132	0132	—	×	2	×	EC-226
HO2S1 (B1)	P0133	0133	×	×	2	×	EC-233
HO2S1 (B1)	P0134	0134	—	×	2	×	EC-243
HO2S2 (B1)	P0138	0138	—	×	2	×	EC-251
HO2S2 (B1)	P0139	0139	×	×	2	×	EC-258
FUEL SYS-LEAN-B1	P0171	0171	—	—	2	×	EC-266
FUEL SYS-RICH-B1	P0172	0172	—	—	2	×	EC-273
FTT SENSOR	P0181	0181	—	—	2	×	EC-279
FTT SEN/CIRCUIT	P0182	0182	—	—	2	×	EC-285
FTT SEN/CIRCUIT	P0183	0183	—	—	2	×	EC-285
TP SEN 1/CIRC	P0222	0222	—	—	1	×	EC-290
TP SEN 1/CIRC	P0223	0223	—	—	1	×	EC-290
MULTI CYL MISFIRE	P0300	0300	—	—	2	×	EC-298
CYL 1 MISFIRE	P0301	0301	—	—	2	×	EC-298
CYL 2 MISFIRE	P0302	0302	—	—	2	×	EC-298

Items (CONSULT-II screen terms)	DTC*[1]		SRT code	Test value/ Test limit (GST only)	Trip	MIL lighting up	Reference page
	CONSULT-II GST*[2]	ECM*[3]					
CYL 3 MISFIRE	P0303	0303	—	—	2	×	EC-298
CYL 4 MISFIRE	P0304	0304	—	—	2	×	EC-298
KNOCK SEN/CIRC-B1	P0327	0327	—	—	2	—	EC-305
KNOCK SEN/CIRC-B1	P0328	0328	—	—	2	—	EC-305
CKP SEN/CIRCUIT	P0335	0335	—	—	2	×	EC-310
CMP SEN/CIRC-B1	P0340	0340	—	—	2	×	EC-318
TW CATALYST SYS-B1	P0420	0420	×	×	2	×	EC-326
EVAP PURG FLOW/MON	P0441	0441	×	×	2	×	EC-332
EVAP SMALL LEAK	P0442	0442	×	×	2	×	EC-338
PURG VOLUME CONT/V	P0444	0444	—	—	2	×	EC-348
PURG VOLUME CONT/V	P0445	0445	—	—	2	×	EC-348
VENT CONTROL VALVE	P0447	0447	—	—	2	×	EC-355
EVAP SYS PRES SEN	P0451	0451	—	—	2	×	EC-362
EVAP SYS PRES SEN	P0452	0452	—	—	2	×	EC-365
EVAP SYS PRES SEN	P0453	0453	—	—	2	×	EC-372
EVAP GROSS LEAK	P0455	0455	—	—	2	×	EC-380
EVAP VERY SML LEAK	P0456	0456	×*[4]	×	2	×	EC-388
FUEL LEV SEN SLOSH	P0460	0460	—	—	2	×	EC-399
FUEL LEVEL SENSOR	P0461	0461	—	—	2	×	EC-401
FUEL LEVL SEN/CIRC	P0462	0462	—	—	2	×	EC-403
FUEL LEVL SEN/CIRC	P0463	0463	—	—	2	×	EC-403
VEH SPEED SEN/CIRC*[5]	P0500	0500	—	—	2	×	EC-405
ISC SYSTEM	P0506	0506	—	—	2	×	EC-407
ISC SYSTEM	P0507	0507	—	—	2	×	EC-409
PW STP SEN/CIRC	P0550	0550	—	—	2	—	EC-411
ECM	P0605	0605	—	—	1 or 2	× or —	EC-416
PNP SW/CIRC	P0705	0705	—	—	2	×	AT-98
ATF TEMP SEN/CIRC	P0710	0710	—	—	2	×	AT-104
VEH SPD SEN/CIR AT*[5]	P0720	0720	—	—	2	×	AT-109
ENGINE SPEED SIG	P0725	0725	—	—	2	×	AT-115
A/T 1ST GR FNCTN	P0731	0731	—	—	2	×	AT-120
A/T 2ND GR FNCTN	P0732	0732	—	—	2	×	AT-125
A/T 3RD GR FNCTN	P0733	0733	—	—	2	×	AT-130
A/T 4TH GR FNCTN	P0734	0734	—	—	2	×	AT-135
TCC SOLENOID/CIRC	P0740	0740	—	—	2	×	AT-142
A/T TCC S/V FNCTN	P0744	0744	—	—	2	×	AT-147
L/PRESS SOL/CIRC	P0745	0745	—	—	2	×	AT-155
SFT SOL A/CIRC	P0750	0750	—	—	1	×	AT-162
SFT SOL B/CIRC	P0755	0755	—	—	1	×	AT-167
ECM BACK UP/CIRC	P1065	1065	—	—	2	×	EC-419
INT/V TIM V/CIR-B1	P1111	1111	—	—	2	×	EC-423
ETC ACTR	P1121	1121	—	—	1	×	EC-427

Items (CONSULT-II screen terms)	DTC*1		SRT code	Test value/ Test limit (GST only)	Trip	MIL lighting up	Reference page
	CONSULT-II GST*2	ECM*3					
ETC FUNCTION/CIRC	P1122	1122	—	—	1	×	EC-429
ETC MOT PWR	P1124	1124	—	—	1	×	EC-437
ETC MOT PWR	P1126	1126	—	—	1	×	EC-437
ETC MOT	P1128	1128	—	—	1	×	EC-443
HO2S1 (B1)	P1143	1143	×	×	2	×	EC-448
HO2S1 (B1)	P1144	1144	×	×	2	×	EC-454
HO2S2 (B1)	P1146	1146	×	×	2	×	EC-460
HO2S2 (B1)	P1147	1147	×	×	2	×	EC-468
CLOSED LOOP-B1	P1148	1148	—	—	1	×	EC-476
TCS C/U FUNCTION	P1211	1211	—	—	2	—	EC-478
TCS/CIRC	P1212	1212	—	—	2	—	EC-479
ENG OVER TEMP	P1217	1217	—	—	1	×	EC-480
CTP LEARNING	P1225	1225	—	—	2	—	EC-495
CTP LEARNING	P1226	1226	—	—	2	—	EC-497
SENSOR POWER/CIRC	P1229	1229	—	—	1	×	EC-499
PURG VOLUME CONT/V	P1444	1444	—	—	2	×	EC-504
VENT CONTROL VALVE	P1446	1446	—	—	2	×	EC-512
ASCD SW	P1564	1564	—	—	1	—	EC-519
ASCD BRAKE SW	P1572	1572	—	—	1	—	EC-527
ASCD VHL SPD SEN	P1574	1574	—	—	1	—	EC-538
NATS MALFUNCTION	P1610 - P1615	1610 - 1615	—	—	2	—	EC-46
TPV SEN/CIRC A/T	P1705	1705	—	—	1	×	AT-172
P-N POS SW/CIRCUIT	P1706	1706	—	—	2	×	EC-540
V/SP SEN (A/T)	P1720	1720	—	—	2	—	AT-109
O/R CLTCH SOL/CIRC	P1760	1760	—	—	2	×	AT-177
VIAS S/V CIRC	P1800	1800	—	—	2	—	EC-545
BRAKE SW/CIRCUIT	P1805	1805	—	—	2	—	EC-550
APP SEN 1/CIRC	P2122	2122	—	—	1	×	EC-555
APP SEN 1/CIRC	P2123	2123	—	—	1	×	EC-555
APP SEN 2/CIRC	P2127	2127	—	—	1	×	EC-562
APP SEN 2/CIRC	P2128	2128	—	—	1	×	EC-562
TP SENSOR	P2135	2135	—	—	1	×	EC-570
APP SENSOR	P2138	2138	—	—	1	×	EC-578

*1: 1st trip DTC No. is the same as DTC No.
*2: This number is prescribed by SAE J2012.
*3: In Diagnostic Test Made II (Self-diagnostic results), this number is controlled by NISSAN.
*4: SRT code will not be set if the self-diagnostic result is NG.
*5: When the fail-safe operations for both self-diagnoses occur at the same time, the MIL illuminates.
*6: The troubleshooting for this DTC needs CONSULT-II.
*7: When the ECM is in the mode of displaying SRT status, MIL may flash. For the details, refer to EC-56, "How to Display SRT Status"
*8: When engine is running, MIL may flash. For the details, refer to EC-62, "MIL Flashing Without DTC" .

DTC AND 1ST TRIP DTC

The 1st trip DTC (whose number is the same as the DTC number) is displayed for the latest self-diagnostic results obtained. If the ECM memory was cleared previously, and the 1st trip DTC did not reoccur, the 1st trip DTC will not be displayed.
If a malfunction is detected during the 1st trip, the 1st trip DTC is stored in the ECM memory. The MIL will not light up (two trip detection logic). If the same malfunction is not detected in the 2nd trip (meeting the required driving pattern), the 1st trip DTC is cleared from the ECM memory. If the same malfunction is detected in the 2nd trip, both the 1st trip DTC and DTC are stored in the ECM memory and the MIL lights up. In other words, the DTC is stored in the ECM memory and the MIL lights up when the same malfunction occurs in two consecutive trips. If a 1st trip DTC is stored and a non-diagnostic operation is performed between the 1st and 2nd trips, only the 1st trip DTC will continue to be stored. For malfunctions that blink or light up the MIL during the 1st trip, the DTC and 1st trip DTC are stored in the ECM memory.
Procedures for clearing the DTC and the 1st trip DTC from the ECM memory are described in EC-59, "HOW TO ERASE EMISSION-RELATED DIAGNOSTIC INFORMATION" .
For malfunctions in which 1st trip DTCs are displayed, refer to EC-48, "EMISSION-RELATED DIAGNOSTIC INFORMATION ITEMS" . These items are required by legal regulations to continuously monitor the system/ component. In addition, the items monitored non-continuously are also displayed on CONSULT-II.
1st trip DTC is specified in Service $07 of SAE J1979. 1st trip DTC detection occurs without lighting up the MIL and therefore does not warn the driver of a malfunction. However, 1st trip DTC detection will not prevent the vehicle from being tested, for example during Inspection/Maintenance (I/M) tests.
When a 1st trip DTC is detected, check, print out or write down and erase (1st trip) DTC and Freeze Frame data as specified in Work Flow procedure Step II, refer to EC-95, "WORK FLOW" . Then perform DTC Confirmation Procedure or Overall Function Check to try to duplicate the malfunction. If the malfunction is duplicated, the item requires repair.

How to Read DTC and 1st Trip DTC

DTC and 1st trip DTC can be read by the following methods.

WITH CONSULT-II

WITH GST

CONSULT-II or GST (Generic Scan Tool) Examples: P0340, P1148, P1706, etc.
These DTCs are prescribed by SAE J2012.
(CONSULT-II also displays the malfunctioning component or system.)

NO TOOLS

The number of blinks of the MIL in the Diagnostic Test Mode II (Self-Diagnostic Results) indicates the DTC.
Example: 0340, 1148, 1706, etc.
These DTCs are controlled by NISSAN.

- **1st trip DTC No. is the same as DTC No.**
- **Output of a DTC indicates a malfunction. However, GST or the Diagnostic Test Mode II do not indicate whether the malfunction is still occurring or has occurred in the past and has returned to normal. CONSULT-II can identify malfunction status as shown below. Therefore, using CONSULT-II (if available) is recommended.**

A sample of CONSULT-II display for DTC and 1st trip DTC is shown below. DTC or 1st trip DTC of a malfunction is displayed in SELF-DIAGNOSTIC RESULTS mode of CONSULT-II. Time data indicates how many times the vehicle was driven after the last detection of a DTC.
If the DTC is being detected currently, the time data will be [0].
If a 1st trip DTC is stored in the ECM, the time data will be [1t].

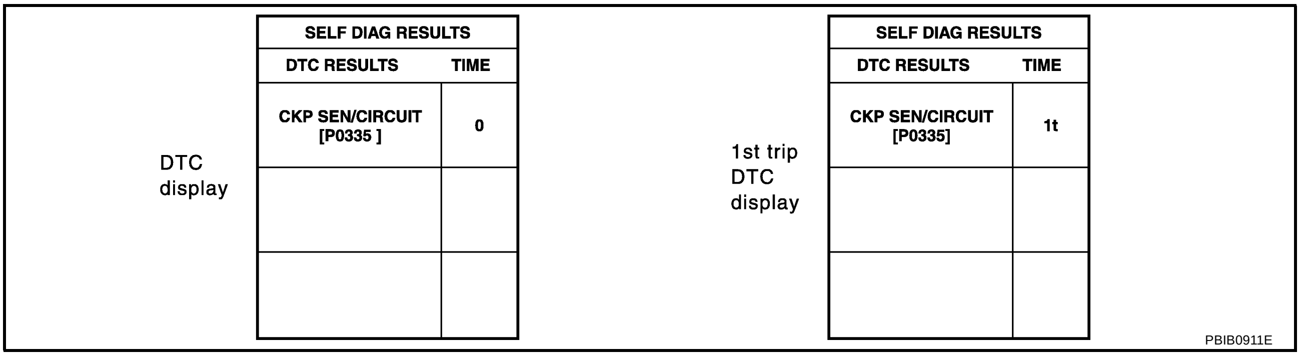

FREEZE FRAME DATA AND 1ST TRIP FREEZE FRAME DATA

The ECM records the driving conditions such as fuel system status, calculated load value, engine coolant temperature, short term fuel trim, long term fuel trim, engine speed, vehicle speed, base fuel schedule and intake air temperature at the moment a malfunction is detected.
Data which are stored in the ECM memory, along with the 1st trip DTC, are called 1st trip freeze frame data. The data, stored together with the DTC data, are called freeze frame data and displayed on CONSULT-II or GST. The 1st trip freeze frame data can only be displayed on the CONSULT-II screen, not on the GST. For details, see EC-127, "Freeze Frame Data and 1st Trip Freeze Frame Data" .
Only one set of freeze frame data (either 1st trip freeze frame data or freeze frame data) can be stored in the ECM. 1st trip freeze frame data is stored in the ECM memory along with the 1st trip DTC. There is no priority for 1st trip freeze frame data and it is updated each time a different 1st trip DTC is detected. However, once freeze frame data (2nd trip detection/MIL on) is stored in the ECM memory, 1st trip freeze frame data is no longer stored. Remember, only one set of freeze frame data can be stored in the ECM. The ECM has the following priorities to update the data.

Priority	Items	
1	Freeze frame data	Misfire — DTC: P0300 - P0304 Fuel Injection System Function — DTC: P0171, P0172
2		Except the above items (Includes A/T related items)
3	1st trip freeze frame data	

For example, the EGR malfunction (Priority: 2) was detected and the freeze frame data was stored in the 2nd trip. After that when the misfire (Priority: 1) is detected in another trip, the freeze frame data will be updated from the EGR malfunction to the misfire. The 1st trip freeze frame data is updated each time a different malfunction is detected. There is no priority for 1st trip freeze frame data. However, once freeze frame data is stored in the ECM memory, 1st trip freeze data is no longer stored (because only one freeze frame data or 1st trip freeze frame data can be stored in the ECM). If freeze frame data is stored in the ECM memory and freeze frame data with the same priority occurs later, the first (original) freeze frame data remains unchanged in the ECM memory.
Both 1st trip freeze frame data and freeze frame data (along with the DTCs) are cleared when the ECM memory is erased. Procedures for clearing the ECM memory are described in EC-48, "EMISSION-RELATED DIAGNOSTIC INFORMATION ITEMS" .

SYSTEM READINESS TEST (SRT) CODE

System Readiness Test (SRT) code is specified in Service $01 of SAE J1979.
As part of an enhanced emissions test for Inspection & Maintenance (I/M), certain states require the status of SRT be used to indicate whether the ECM has completed self-diagnosis of major emission systems and components. Completion must be verified in order for the emissions inspection to proceed.
If a vehicle is rejected for a State emissions inspection due to one or more SRT items indicating “INCMP”, use the information in this Service Manual to set the SRT to “CMPLT”.
In most cases the ECM will automatically complete its self-diagnosis cycle during normal usage, and the SRT status will indicate “CMPLT” for each application system. Once set as “CMPLT”, the SRT status remains “CMPLT” until the self-diagnosis memory is erased.
Occasionally, certain portions of the self-diagnostic test may not be completed as a result of the customer's normal driving pattern; the SRT will indicate “INCMP” for these items.

NOTE:
The SRT will also indicate “INCMP” if the self-diagnosis memory is erased for any reason or if the ECM memory power supply is interrupted for several hours.
If, during the state emissions inspection, the SRT indicates “CMPLT” for all test items, the inspector will continue with the emissions test. However, if the SRT indicates “INCMP” for one or more of the SRT items the vehicle is returned to the customer untested.

NOTE:
If MIL is “ON” during the state emissions inspection, the vehicle is also returned to the customer untested even though the SRT indicates “CMPLT” for all test items. Therefore, it is important to check SRT (“CMPLT”) and DTC (No DTCs) before the inspection.

SRT Item

The table below shows required self-diagnostic items to set the SRT to “CMPLT”.

SRT item (CONSULT-II indication)	Performance Priority*1	Required self-diagnostic items to set the SRT to “CMPLT”	Corresponding DTC No.
CATALYST	2	Three way catalyst function	P0420
EVAP SYSTEM	1	EVAP control system	P0442
	2	EVAP control system	P0456
	2	EVAP control system purge flow monitoring	P0441
HO2S	2	Heated oxygen sensor 1	P0133
		Heated oxygen sensor 1	P1143
		Heated oxygen sensor 1	P1144
		Heated oxygen sensor 2	P0139
		Heated oxygen sensor 2	P1146
		Heated oxygen sensor 2	P1147
HO2S HTR	2	Heated oxygen sensor 1 heater	P0031, P0032
		Heated oxygen sensor 2 heater	P0037, P0038

*1: If completion of several SRTs is required, perform driving patterns (DTC confirmation procedure), one by one based on the priority for models with CONSULT-II.

SRT Set Timing

SRT is set as “CMPLT” after self-diagnosis has been performed one or more times. Completion of SRT is done regardless of whether the result is OK or NG. The set timing is different between OK and NG results and is shown in the table below.

Self-diagnosis result		Example				
		Diagnosis	Ignition cycle ← ON → OFF ← ON → OFF ← ON → OFF ← ON →			
All OK	Case 1	P0400	OK (1)	— (1)	OK (2)	— (2)
		P0402	OK (1)	— (1)	— (1)	OK (2)
		P1402	OK (1)	OK (2)	— (2)	— (2)
		SRT of EGR	“CMPLT”	“CMPLT”	“CMPLT”	“CMPLT”
	Case 2	P0400	OK (1)	— (1)	— (1)	— (1)
		P0402	— (0)	— (0)	OK (1)	— (1)
		P1402	OK (1)	OK (2)	— (2)	— (2)
		SRT of EGR	“INCMP”	“INCMP”	“CMPLT”	“CMPLT”
NG exists	Case 3	P0400	OK	OK	—	—
		P0402	—	—	—	—
		P1402	NG	—	NG	NG (Consecutive NG)
		(1st trip) DTC	1st trip DTC	—	1st trip DTC	DTC (= MIL “ON”)
		SRT of EGR	“INCMP”	“INCMP”	“INCMP”	“CMPLT”

OK: Self-diagnosis is carried out and the result is OK.
NG: Self-diagnosis is carried out and the result is NG.
—: Self-diagnosis is not carried out.

When all SRT related self-diagnoses showed OK results in a single cycle (Ignition OFF-ON-OFF), the SRT will indicate “CMPLT”. → Case 1 above
When all SRT related self-diagnoses showed OK results through several different cycles, the SRT will indicate “CMPLT” at the time the respective self-diagnoses have at least one OK result. → Case 2 above
If one or more SRT related self-diagnoses showed NG results in 2 consecutive cycles, the SRT will also indicate “CMPLT”. → Case 3 above
The table above shows that the minimum number of cycles for setting SRT as “INCMP” is one (1) for each self-diagnosis (Case 1 & 2) or two (2) for one of self-diagnoses (Case 3). However, in preparation for the state emissions inspection, it is unnecessary for each self-diagnosis to be executed twice (Case 3) for the following reasons:

- The SRT will indicate “CMPLT” at the time the respective self-diagnoses have one (1) OK result.
- The emissions inspection requires “CMPLT” of the SRT only with OK self-diagnosis results.
- When, during SRT driving pattern, 1st trip DTC (NG) is detected prior to “CMPLT” of SRT, the self-diagnosis memory must be erased from ECM after repair.
- If the 1st trip DTC is erased, all the SRT will indicate “INCMP”.

  NOTE:
  SRT can be set as “CMPLT” together with the DTC(s). Therefore, DTC check must always be carried out prior to the state emission inspection even though the SRT indicates “CMPLT”.

SRT Service Procedure

If a vehicle has failed the state emissions inspection due to one or more SRT items indicating “INCMP”, review the flowchart diagnostic sequence on the next page.

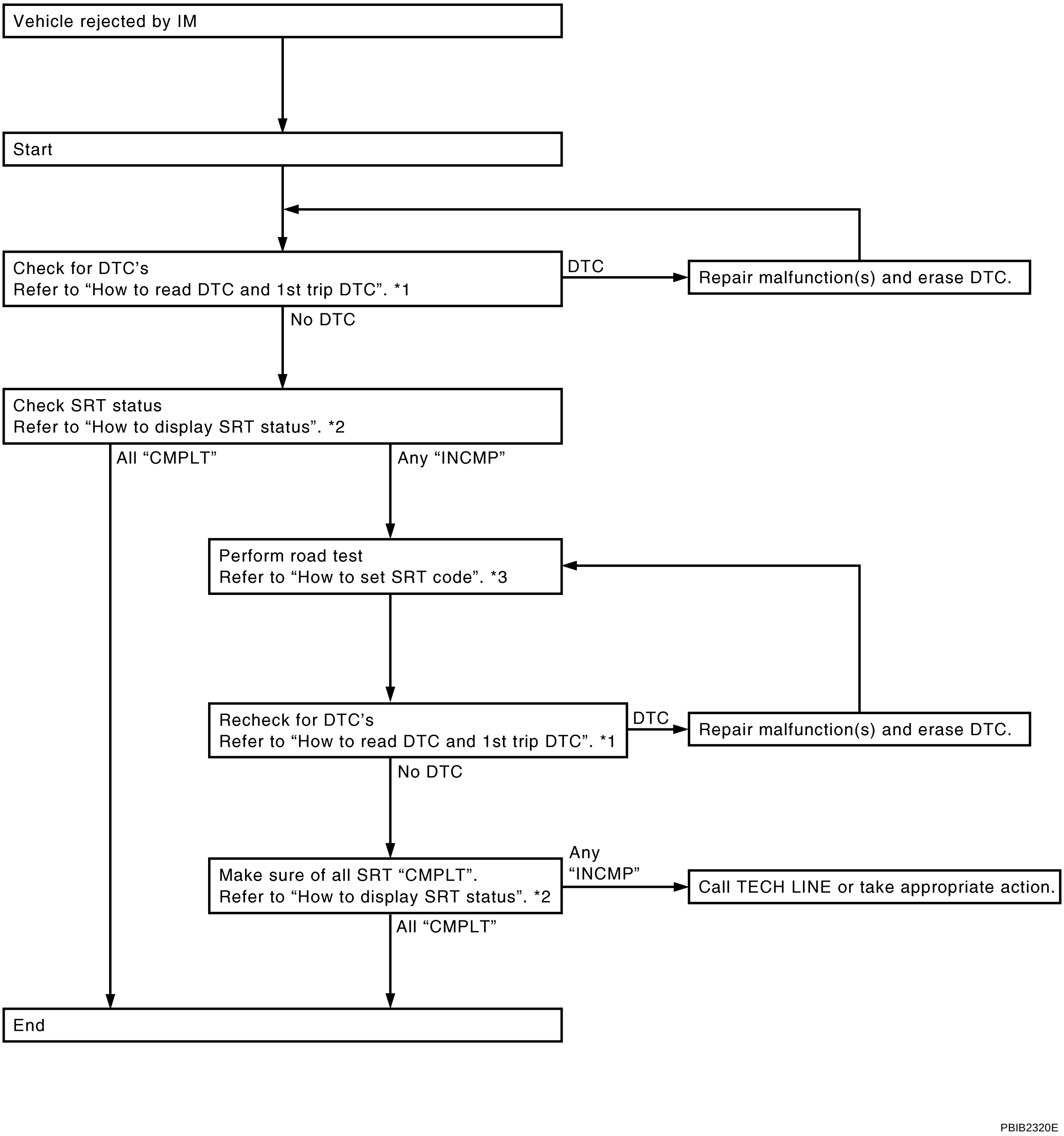

*1 EC-51 *2 EC-56 *3 EC-56

A EC C D E F G H I J K L M

How to Display SRT Status

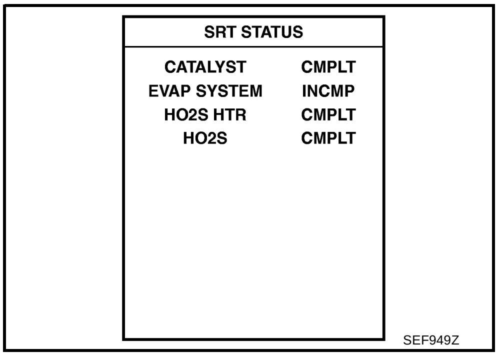

WITH CONSULT-II

Selecting “SRT STATUS” in “DTC CONFIRMATION” mode with CONSULT-II.

For items whose SRT codes are set, a “CMPLT” is displayed on the CONSULT-II screen; for items whose SRT codes are not set, “INCMP” is displayed.

A sample of CONSULT-II display for SRT code is shown in the figure.

“INCMP” means the self-diagnosis is incomplete and SRT is not set.

“CMPLT” means the self-diagnosis is complete and SRT is set.

WITH GST

Selecting Service $01 with GST (Generic Scan Tool)

NO TOOLS

A SRT code itself can not be displayed while only SRT status can be.

1. Turn ignition switch ON and wait 20 seconds.
2. SRT status is indicated as shown below.

- When all SRT codes are set, MIL lights up continuously.
- When any SRT codes are not set, MIL will flash periodically for 10 seconds.

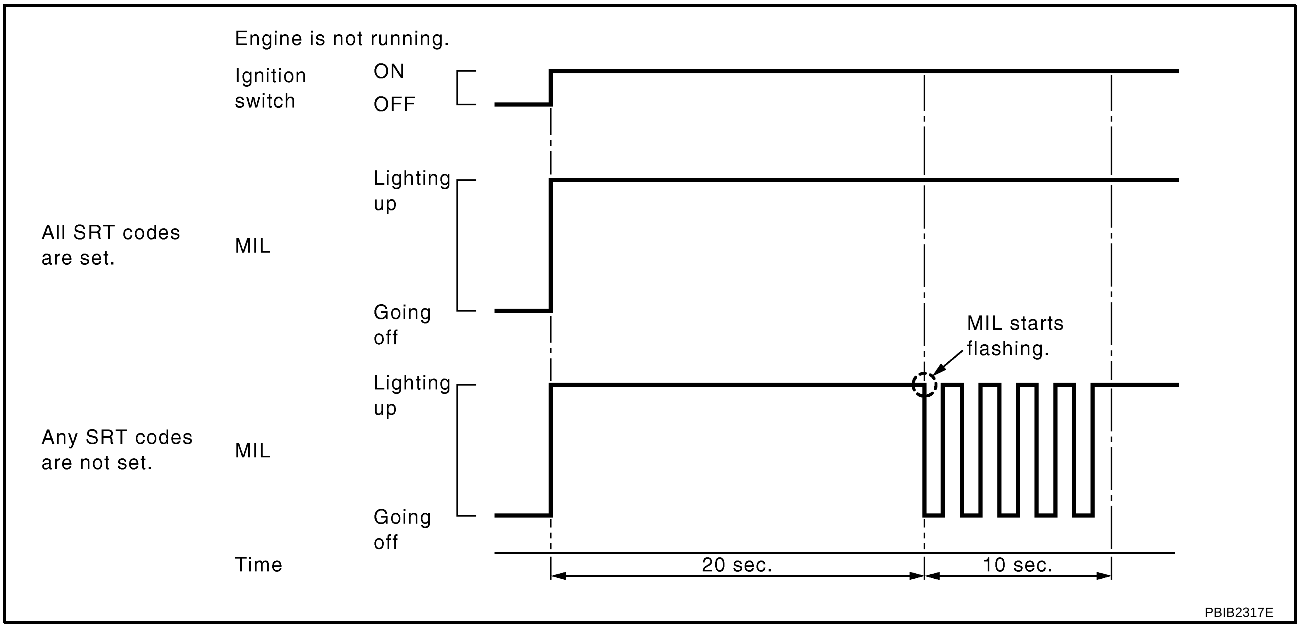

How to Set SRT Code

To set all SRT codes, self-diagnosis for the items indicated above must be performed one or more times. Each diagnosis may require a long period of actual driving under various conditions.

WITH CONSULT-II

Perform corresponding DTC Confirmation Procedure one by one based on “Performance Priority” in the table on EC-52 .

WITHOUT CONSULT-II

The most efficient driving pattern in which SRT codes can be properly set is explained on the next page. The driving pattern should be performed one or more times to set all SRT codes.

Driving Pattern

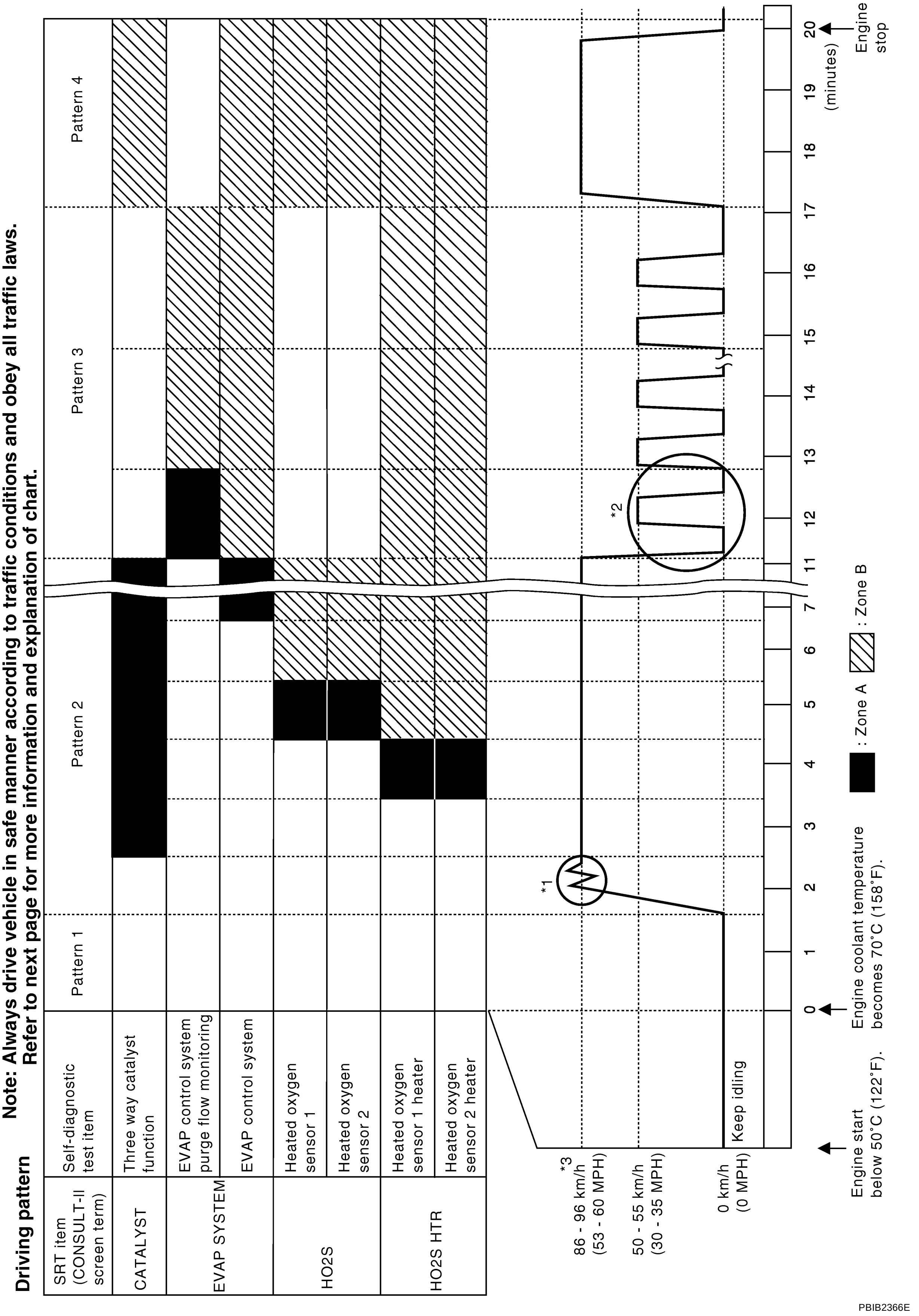

PBIB2366E

- The time required for each diagnosis varies with road surface conditions, weather, altitude, individual driving habits, etc.
  Zone A refers to the range where the time, required for the diagnosis under normal conditions*, is the shortest.
  Zone B refers to the range where the diagnosis can still be performed if the diagnosis is not completed within zone A.

*: Normal conditions refer to the following:

- Sea level
- Flat road
- Ambient air temperature: 20 - 30°C (68 - 86°F)
- Diagnosis is performed as quickly as possible under normal conditions.
  Under different conditions [For example: ambient air temperature other than 20 - 30°C (68 - 86°F)], diagnosis may also be performed.

Pattern 1:

- **The engine is started at the engine coolant temperature of −10 to 35°C (14 to 95°F) (where the voltage between the ECM terminal 73 and ground is 3.0 - 4.3V).**
- **The engine must be operated at idle speed until the engine coolant temperature is greater than 70°C (158°F) (where the voltage between the ECM terminal 73 and ground is lower than 1.4V).**
- **The engine is started at the fuel tank temperature of warmer than 0°C (32°F) (where the voltage between the ECM terminal 107 and ground is less than 4.1V).**

Pattern 2:

- When steady-state driving is performed again even after it is interrupted, each diagnosis can be conducted. In this case, the time required for diagnosis may be extended.

Pattern 3:

- The driving pattern outlined in *2 must be repeated at least 3 times.

Pattern 4:

- Tests are performed after the engine has been operated for at least 17 minutes.
- The accelerator pedal must be held very steady during steady-state driving.
- If the accelerator pedal is moved, the test must be conducted all over again.

*1: Depress the accelerator pedal until vehicle speed is 90 km/h (56 MPH), then release the accelerator pedal and keep it released for more than 10 seconds. Depress the accelerator pedal until vehicle speed is 90 km/h (56 MPH) again.

*2: Operate the vehicle in the following driving pattern.

1. Decelerate vehicle to 0 km/h (0 MPH) and let engine idle.
2. Repeat driving pattern shown at right at least 10 times.

– **During acceleration, hold the accelerator pedal as steady as possible.**

*3: Checking the vehicle speed with GST is advised.

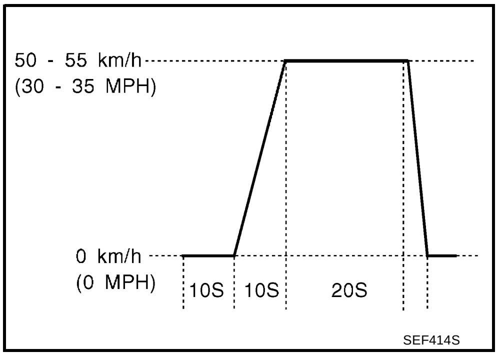

SEF414S

Suggested Transmission Gear Position for A/T Models

Set the selector lever in the D position with the overdrive switch turned ON.

Suggested upshift speeds for M/T models

Shown below are suggested vehicle speeds for shifting into a higher gear. These suggestions relate to fuel economy and vehicle performance. Actual upshift speeds will vary according to road conditions, the weather and individual driving habits.

	For normal acceleration in low altitude areas [less than 1,219 m (4,000 ft)]:		For quick acceleration in low altitude areas and high altitude areas [over 1,219 m (4,000 ft)]:
Gear change	ACCEL shift point km/h (MPH)	CRUISE shift point km/h (MPH)	km/h (MPH)
1st to 2nd	29 (18)	29 (15)	24 (15)
2nd to 3rd	54 (34)	54 (34)	40 (25)
3rd to 4th	75 (47)	75 (47)	64 (40)
4th to 5th	91 (57)	82 (51)	72 (45)

Suggested Maximum Speed in Each Gear

Downshift to a lower gear if the engine is not running smoothly, or if you need to accelerate.

Do not exceed the maximum suggested speed (shown below) in any gear. For level road driving, use the highest gear suggested for that speed. Always observe posted speed limits and drive according to the road conditions to ensure safe operation. Do not over-rev the engine when shifting to a lower gear as it may cause engine damage or loss of vehicle control.

Gear	km/h (MPH)
1st	45 (28)
2nd	85 (53)
3rd	135 (84)
4th	—
5th	—

TEST VALUE AND TEST LIMIT (GST ONLY — NOT APPLICABLE TO CONSULT-II)

The following is the information specified in Service $06 of SAE J1979.

The test value is a parameter used to determine whether a system/circuit diagnostic test is “OK” or “NG” while being monitored by the ECM during self-diagnosis. The test limit is a reference value which is specified as the maximum or minimum value and is compared with the test value being monitored.

These data (test value and test limit) are specified by Test ID (TID) and Component ID (CID) and can be displayed on the GST screen.

Item	Self-diagnostic test item	DTC	Test value (GST display)		Test limit	Conversion
			TID	CID		
CATALYST	Three way catalyst function	P0420	01H	01H	Max.	1/128
		P0420	02H	81H	Min.	1
EVAP SYSTEM	EVAP control system (Small leak)	P0442	05H	03H	Max.	1/128 mm^2
	EVAP control system purge flow monitoring	P0441	06H	83H	Min.	20 mV
	EVAP control system (Very small leak)	P0456	07H	03H	Max.	1/128 mm^2
HO2S	Heated oxygen sensor 1	P0133	09H	04H	Max.	16 ms
		P1143	0AH	84H	Min.	10 mV
		P1144	0BH	04H	Max.	10 mV
	Heated oxygen sensor 2	P0139	19H	86H	Min.	10 mV/500 ms
		P1147	1AH	86H	Min.	10 mV
		P1146	1BH	06H	Max.	10 mV
HO2S HTR	Heated oxygen sensor 1 heater	P0032	29H	08H	Max.	20 mV
		P0031	2AH	88H	Min.	20 mV
	Heated oxygen sensor 2 heater	P0038	2DH	0AH	Max.	20 mV
		P0037	2EH	8AH	Min.	20 mV

HOW TO ERASE EMISSION-RELATED DIAGNOSTIC INFORMATION

How to Erase DTC

With CONSULT-II

The emission related diagnostic information in the ECM can be erased by selecting “ERASE” in the “SELF-DIAG RESULTS” mode with CONSULT-II.
If DTCs are displayed for both ECM and TCM (Transmission control module), they need to be erased individually from the ECM and TCM (Transmission control module).

NOTE:
If the DTC is not for AT related items (see EC-8, "INDEX FOR DTC"), skip steps 2 through 4.

1. If the ignition switch stays ON after repair work, be sure to turn ignition switch OFF once. Wait at least 10 seconds and then turn it ON (engine stopped) again.
2. Turn CONSULT-II ON and touch “AT”.
3. Touch “SELF-DIAG RESULTS”.
4. Touch “ERASE”. [The DTC in the TCM (Transmission control module) will be erased.] Then touch “BACK” twice.
5. Touch “ENGINE”.
6. Touch “SELF-DIAG RESULTS”.
7. Touch “ERASE”. (The DTC in the ECM will be erased.)

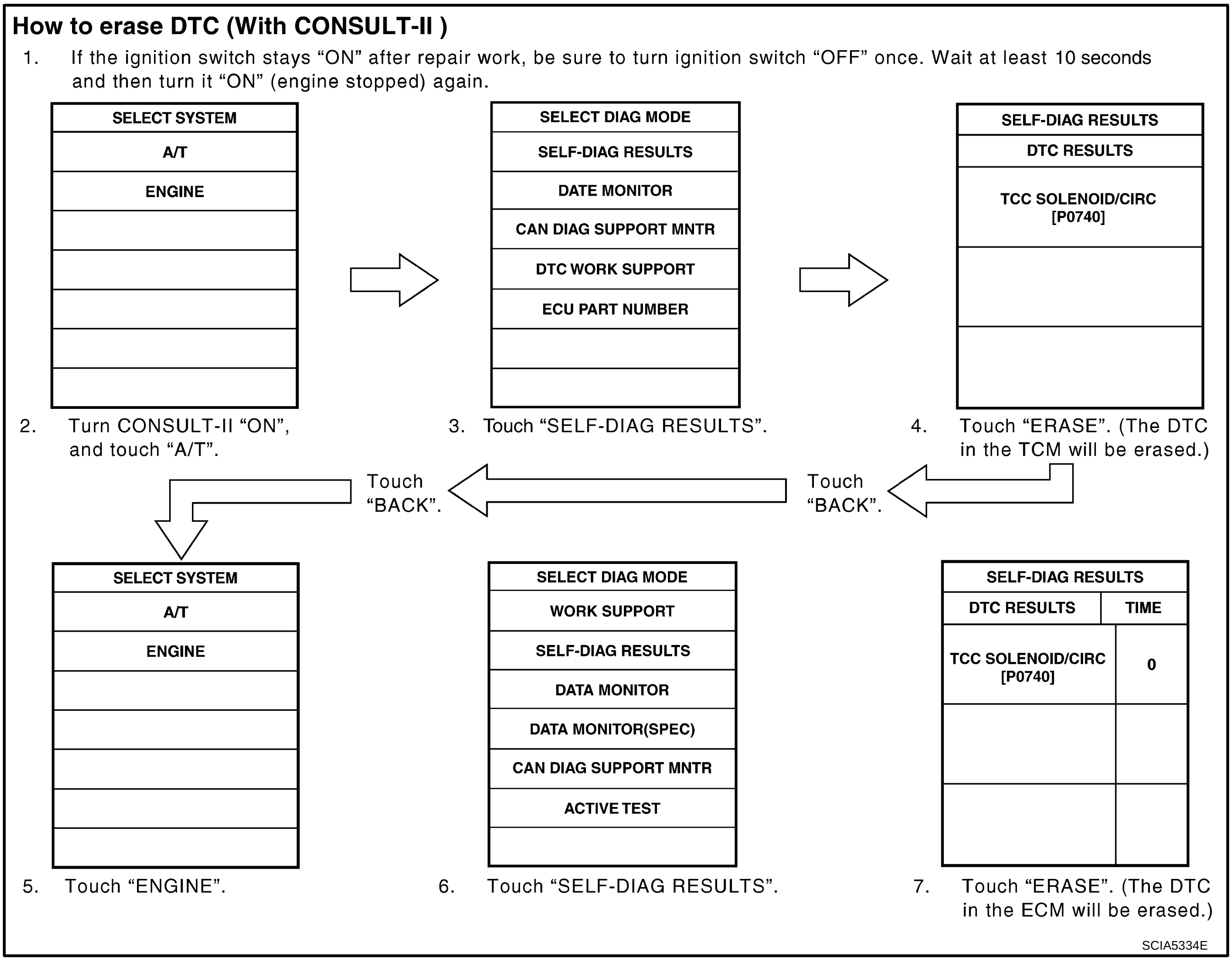

With GST

The emission related diagnostic information in the ECM can be erased by selecting Service $04 with GST.

NOTE:
If the DTC is not for AT related items (see EC-8, "INDEX FOR DTC"), skip step 2.

1. If the ignition switch stays ON after repair work, be sure to turn ignition switch OFF once.
   Wait at least 10 seconds and then turn it ON (engine stopped) again.
2. Perform AT-41, "HOW TO ERASE DTC (WITH GST)" . (The DTC in the TCM will be erased.)
3. Select Service $04 with GST (Generic Scan Tool).

No Tools

NOTE:
If the DTC is not for AT related items (see EC-8, "INDEX FOR DTC"), skip step 2.

1. If the ignition switch stays ON after repair work, be sure to turn ignition switch OFF once. Wait at least 10 seconds and then turn it ON (engine stopped) again.
2. Perform AT-42, "HOW TO ERASE DTC (NO TOOLS)" . (The DTC in the TCM will be erased.)
3. Change the diagnostic test mode from Mode II to Mode I by depressing the accelerator pedal. Refer to EC-62, "HOW TO SWITCH DIAGNOSTIC TEST MODE" .

- **If the battery is disconnected, the emission-related diagnostic information will be lost within 24 hours.**
- **The following data are cleared when the ECM memory is erased.**
  - Diagnostic trouble codes
  - 1st trip diagnostic trouble codes
  - Freeze frame data
  - 1st trip freeze frame data
  - System readiness test (SRT) codes
  - Test values

Actual work procedures are explained using a DTC as an example. Be careful so that not only the DTC, but all of the data listed above, are cleared from the ECM memory during work procedures.

Malfunction Indicator Lamp (MIL)

ABS00CLB

DESCRIPTION

The MIL is located on the instrument panel.

1. The MIL will light up when the ignition switch is turned ON without the engine running. This is a bulb check.
   If the MIL does not light up, refer to DI-25, "WARNING LAMPS" , or see EC-659, "MIL AND DATA LINK CONNECTOR" .
2. When the engine is started, the MIL should go off.
   If the MIL remains on, the on board diagnostic system has detected an engine system malfunction.

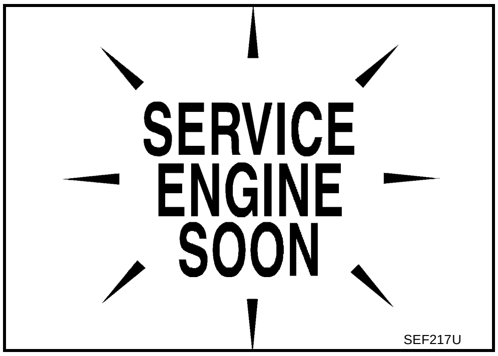

SEF217U

ON BOARD DIAGNOSTIC SYSTEM FUNCTION

The on board diagnostic system has the following four functions.

Diagnostic Test Mode	KEY and ENG. Status	Function	Explanation of Function
Mode I	Ignition switch in ON position Engine stopped 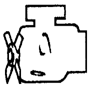	BULB CHECK	This function checks the MIL bulb for damage (blown, open circuit, etc.). If the MIL does not come on, check MIL circuit.
	Engine running 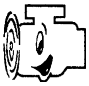	MALFUNCTION WARNING	This is a usual driving condition. When a malfunction is detected twice in two consecutive driving cycles (two trip detection logic), the MIL will light up to inform the driver that a malfunction has been detected. The following malfunctions will light up or blink the MIL in the 1st trip. ● Misfire (Possible three way catalyst damage) ● One trip detection diagnoses

Diagnostic Test Mode	KEY and ENG. Status	Function	Explanation of Function
Mode II	Ignition switch in ON position Engine stopped 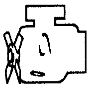	SELF-DIAGNOSTIC RESULTS	This function allows DTCs and 1st trip DTCs to be read.
	Engine running 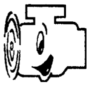	HEATED OXYGEN SENSOR 1 MONITOR	This function allows the fuel mixture condition (lean or rich), monitored by heated oxygen sensor 1, to be read.

When there is an open circuit on MIL circuit, the ECM cannot warn the driver by lighting MIL up when there is malfunction on engine control system.
Therefore, when electrical controlled throttle and part of ECM related diagnoses are continuously detected as NG for 5 trips, ECM warns the driver that engine control system malfunctions and MIL circuit is open by means of operating fail-safe function.
The fail-safe function also operates when above diagnoses except MIL circuit are detected, and demands the driver to repair the malfunction.

Engine operating condition in fail-safe mode	Engine speed will not rise more than 2,500 rpm due to the fuel cut

MIL Flashing Without DTC

- When any SRT codes are not set, MIL may flash without DTC. For the details, refer to EC-56, "How to Display SRT Status"
- If the ECM is in Diagnostic Test Mode II, MIL may flash when engine is running. In this case, check ECM diagnostic test mode. EC-62, "HOW TO SWITCH DIAGNOSTIC TEST MODE" .
  How to switch the diagnostic test (function) modes, and details of the above functions are described later. EC-62, "HOW TO SWITCH DIAGNOSTIC TEST MODE" .
  The following emission-related diagnostic information is cleared when the ECM memory is erased.
- Diagnostic trouble codes
- 1st trip diagnostic trouble codes
- Freeze frame data
- 1st trip freeze frame data
- System readiness test (SRT) codes
- Test values

HOW TO SWITCH DIAGNOSTIC TEST MODE

NOTE:

- **It is better to count the time accurately with a clock.**
- **It is impossible to switch the diagnostic mode when an accelerator pedal position sensor circuit has a malfunction.**
- **Always ECM returns to Diagnostic Test Mode I after ignition switch is turned OFF.**

How to Set Diagnostic Test Mode II (Self-Diagnostic Results)

1. Confirm that accelerator pedal is fully released, turn ignition switch ON and wait 3 seconds.
2. Repeat the following procedure quickly 5 times within 5 seconds.
   a. Fully depress the accelerator pedal.
   b. Fully release the accelerator pedal.
3. Wait 7 seconds, fully depress the accelerator pedal and keep it for approx. 10 seconds until the MIL starts blinking.

NOTE:
Do not release the accelerator pedal for 10 seconds if MIL may start blinking on the halfway of this 10 seconds. This blinking is displaying SRT status and is continued for another 10 seconds. For the details, refer to EC-56, "How to Display SRT Status" .

4. Fully release the accelerator pedal.
   ECM has entered to Diagnostic Test Mode II (Self-diagnostic results).

   NOTE:
   Wait until the same DTC (or 1st trip DTC) appears to confirm all DTCs certainly.

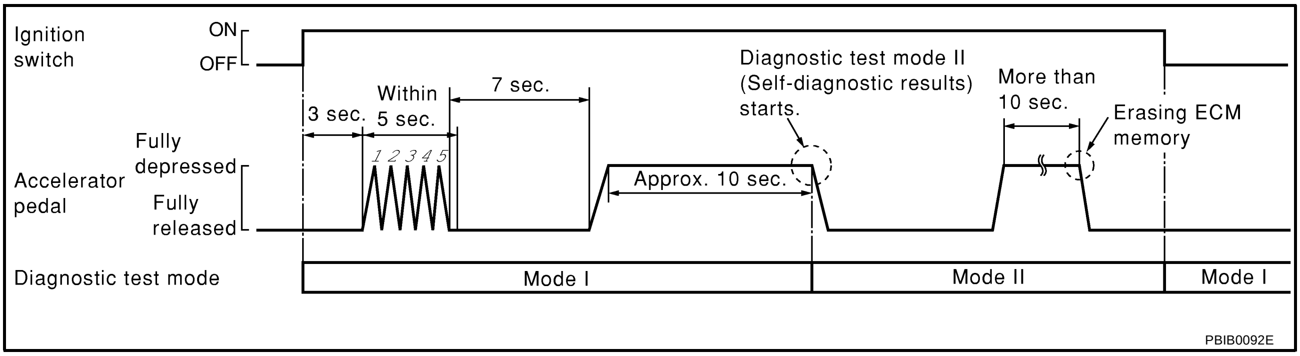

How to Set Diagnostic Test Mode II (Heated Oxygen Sensor 1 Monitor)

1. Set the ECM in Diagnostic Test Mode II (Self-diagnostic results). Refer to EC-62, "How to Set Diagnostic Test Mode II (Self-Diagnostic Results)" .
2. Start Engine.
   ECM has entered to Diagnostic Test Mode II (Heated oxygen sensor 1 monitor).
   ECM will start heated oxygen sensor 1 monitoring from the bank 1 sensor.

How to Erase Diagnostic Test Mode II (Self-Diagnostic Results)

1. Set ECM in Diagnostic Test Mode II (Self-diagnostic results). Refer to EC-62, "How to Set Diagnostic Test Mode II (Self-Diagnostic Results)" .
2. Fully depress the accelerator pedal and keep it for more than 10 seconds.
   The emission-related diagnostic information has been erased from the backup memory in the ECM.
3. Fully release the accelerator pedal, and confirm the DTC 0000 is displayed.

DIAGNOSTIC TEST MODE I — BULB CHECK

In this mode, the MIL on the instrument panel should stay ON. If it remains OFF, check the bulb. Refer to DI-25, "WARNING LAMPS"

DIAGNOSTIC TEST MODE I — MALFUNCTION WARNING

MIL	Condition
ON	When the malfunction is detected.
OFF	No malfunction

These DTC numbers are clarified in Diagnostic Test Mode II (SELF-DIAGNOSTIC RESULTS)

DIAGNOSTIC TEST MODE II — SELF-DIAGNOSTIC RESULTS

In this mode, the DTC and 1st trip DTC are indicated by the number of blinks of the MIL as shown below.
The DTC and 1st trip DTC are displayed at the same time. If the MIL does not illuminate in diagnostic test mode I (Malfunction warning), all displayed items are 1st trip DTCs. If only one code is displayed when the MIL illuminates in diagnostic test mode II (SELF-DIAGNOSTIC RESULTS), it is a DTC; if two or more codes are displayed, they may be either DTCs or 1st trip DTCs. DTC No. is same as that of 1st trip DTC. These unidentified codes can be identified by using the CONSULT-II or GST. A DTC will be used as an example for how to read a code.

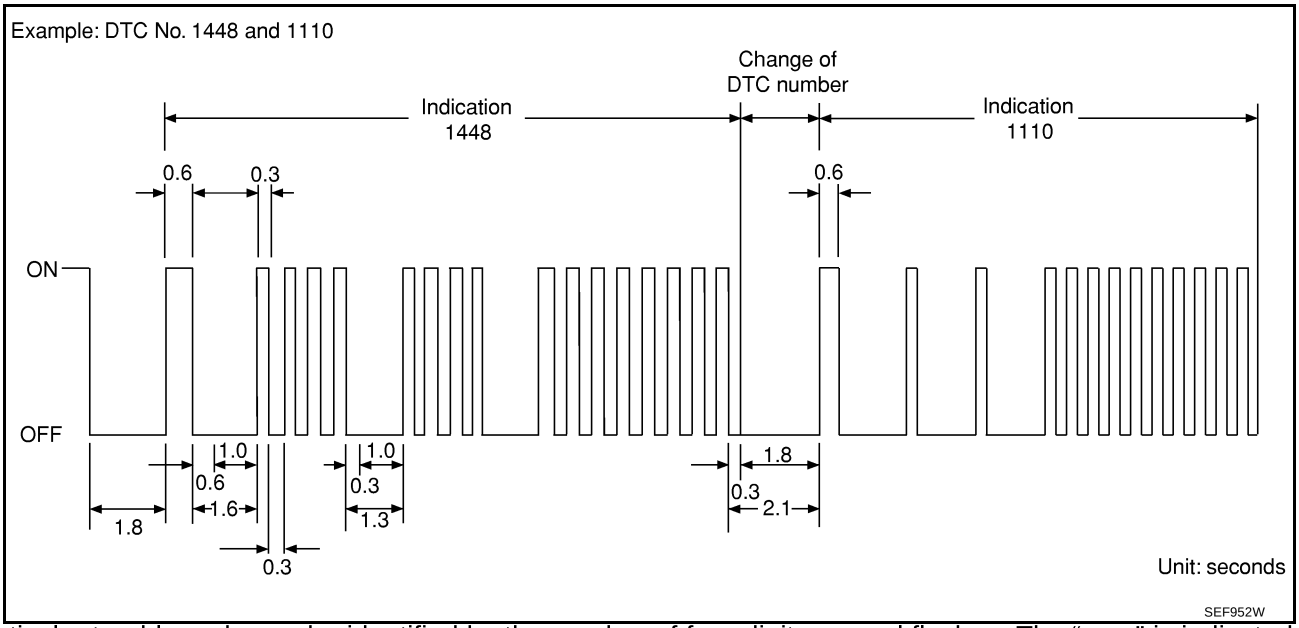

A particular trouble code can be identified by the number of four-digit numeral flashes. The “zero” is indicated by the number of ten flashes. The length of time the 1,000th-digit numeral flashes on and off is 1.2 seconds consisting of an ON (0.6-second) - OFF (0.6-second) cycle.
The 100th-digit numeral and lower digit numerals consist of a 0.3-second ON and 0.3-second OFF cycle.
A change from one digit numeral to another occurs at an interval of 1.0-second OFF. In other words, the later numeral appears on the display 1.3 seconds after the former numeral has disappeared.
A change from one trouble code to another occurs at an interval of 1.8-second OFF.
In this way, all the detected malfunctions are classified by their DTC numbers. The DTC 0000 refers to no malfunction. (See EC-8, "INDEX FOR DTC")

How to Erase Diagnostic Test Mode II (Self-Diagnostic Results)

The DTC can be erased from the back-up memory in the ECM by depressing accelerator pedal. Refer to EC-63, "How to Erase Diagnostic Test Mode II (Self-Diagnostic Results)"

- **If the battery is disconnected, the DTC will be lost from the backup memory within 24 hours.**
- **Be careful not to erase the stored memory before starting trouble diagnoses.**

DIAGNOSTIC TEST MODE II — HEATED OXYGEN SENSOR 1 MONITOR

In this mode, the MIL displays the condition of the fuel mixture (lean or rich) which is monitored by the heated oxygen sensor 1.

MIL	Fuel mixture condition in the exhaust gas	Air fuel ratio feedback control condition
ON	Lean	Closed loop system
OFF	Rich	
*Remains ON or OFF	Any condition	Open loop system

*: Maintains conditions just before switching to open loop.

To check the heated oxygen sensor 1 function, start engine in the Diagnostic Test Mode II and warm it up until engine coolant temperature indicator points to the middle of the gauge.
Next run engine at about 2,000 rpm for about 2 minutes under no-load conditions. Then make sure that the MIL comes ON more than 5 times within 10 seconds with engine running at 2,000 rpm under no-load.

OBD System Operation Chart

ABS00CLC

RELATIONSHIP BETWEEN MIL, 1ST TRIP DTC, DTC, AND DETECTABLE ITEMS

- When a malfunction is detected for the 1st time, the 1st trip DTC and the 1st trip freeze frame data are stored in the ECM memory.
- When the same malfunction is detected in two consecutive trips, the DTC and the freeze frame data are stored in the ECM memory, and the MIL will come on. For details, refer to EC-47, "Two Trip Detection Logic" .
- The MIL will go off after the vehicle is driven 3 times (driving pattern B) with no malfunction. The drive is counted only when the recorded driving pattern is met (as stored in the ECM). If another malfunction occurs while counting, the counter will reset.
- The DTC and the freeze frame data will be stored until the vehicle is driven 40 times (driving pattern A) without the same malfunction recurring (except for Misfire and Fuel Injection System). For Misfire and Fuel Injection System, the DTC and freeze frame data will be stored until the vehicle is driven 80 times (driving pattern C) without the same malfunction recurring. The “TIME” in “SELF-DIAGNOSTIC RESULTS” mode of CONSULT-II will count the number of times the vehicle is driven.
- The 1st trip DTC is not displayed when the self-diagnosis results in OK for the 2nd trip.

SUMMARY CHART

Items	Fuel Injection System	Misfire	Other
MIL (goes off)	3 (pattern B)	3 (pattern B)	3 (pattern B)
DTC, Freeze Frame Data (no display)	80 (pattern C)	80 (pattern C)	40 (pattern A)
1st Trip DTC (clear)	1 (pattern C), *1	1 (pattern C), *1	1 (pattern B)
1st Trip Freeze Frame Data (clear)	*1, *2	*1, *2	1 (pattern B)

For details about patterns B and C under “Fuel Injection System” and “Misfire”, see EC-67 .

For details about patterns A and B under “Other”, see EC-69 .

*1: Clear timing is at the moment OK is detected.

*2: Clear timing is when the same malfunction is detected in the 2nd trip.

RELATIONSHIP BETWEEN MIL, DTC, 1ST TRIP DTC AND DRIVING PATTERNS FOR “MISFIRE <EXHAUST QUALITY DETERIORATION>”, “FUEL INJECTION SYSTEM”

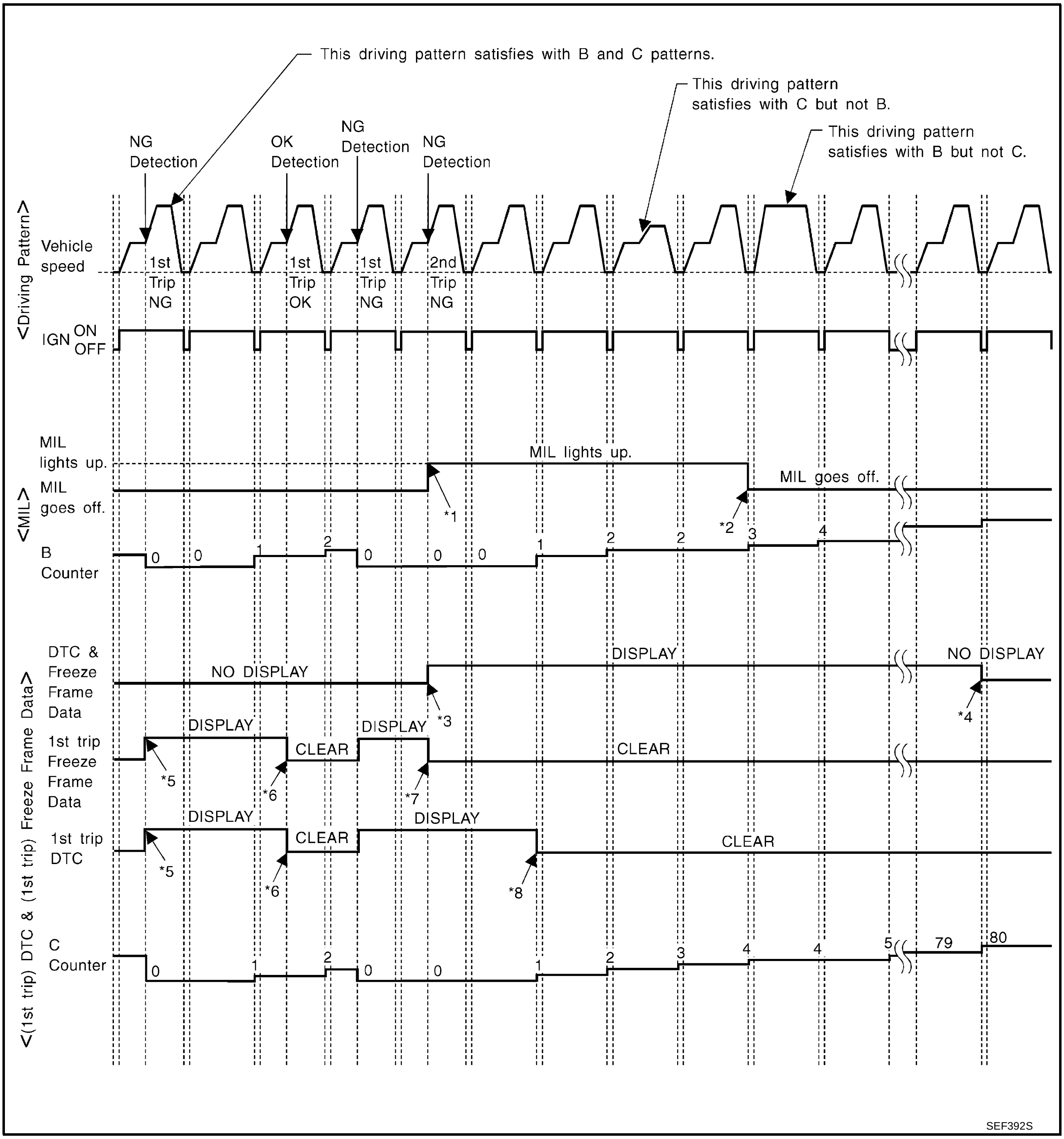

*1: When the same malfunction is detected in two consecutive trips, MIL will light up.

*2: MIL will go off after vehicle is driven 3 times (pattern B) without any malfunctions.

*3: When the same malfunction is detected in two consecutive trips, the DTC and the freeze frame data will be stored in ECM.

*4: The DTC and the freeze frame data will not be displayed any longer after vehicle is driven 80 times (pattern C) without the same malfunction. (The DTC and the freeze frame data still remain in ECM.)

*5: When a malfunction is detected for the 1st time, the 1st trip DTC and the 1st trip freeze frame data will be stored in ECM.

*6: The 1st trip DTC and the 1st trip freeze frame data will be cleared at the moment OK is detected.

*7: When the same malfunction is detected in the 2nd trip, the 1st trip freeze frame data will be cleared.

*8: 1st trip DTC will be cleared when vehicle is driven once (pattern C) without the same malfunction after DTC is stored in ECM.

EXPLANATION FOR DRIVING PATTERNS FOR “MISFIRE <EXHAUST QUALITY DETERIORATION>”, “FUEL INJECTION SYSTEM”

<Driving Pattern B>

Driving pattern B means the vehicle operation as follows:
All components and systems should be monitored at least once by the OBD system.

- The B counter will be cleared when the malfunction is detected once regardless of the driving pattern.
- The B counter will be counted up when driving pattern B is satisfied without any malfunction.
- The MIL will go off when the B counter reaches 3. (*2 in “OBD SYSTEM OPERATION CHART”)

<Driving Pattern C>

Driving pattern C means the vehicle operation as follows:
The following conditions should be satisfied at the same time:
Engine speed: (Engine speed in the freeze frame data) ±375 rpm
Calculated load value: (Calculated load value in the freeze frame data) x (1±0.1) [%]
Engine coolant temperature (T) condition:

- When the freeze frame data shows lower than 70°C (158°F), “T” should be lower than 70°C (158°F).
- When the freeze frame data shows higher than or equal to 70°C (158°F), “T” should be higher than or equal to 70°C (158°F).

Example:
If the stored freeze frame data is as follows:
Engine speed: 850 rpm, Calculated load value: 30%, Engine coolant temperature: 80°C (176°F)
To be satisfied with driving pattern C, the vehicle should run under the following conditions:
Engine speed: 475 - 1,225 rpm, Calculated load value: 27 - 33%, Engine coolant temperature: more than 70°C (158°F)

- The C counter will be cleared when the malfunction is detected regardless of vehicle conditions above.
- The C counter will be counted up when vehicle conditions above is satisfied without the same malfunction.
- The DTC will not be displayed after C counter reaches 80. (*2 in “OBD SYSTEM OPERATION CHART”)
- The 1st trip DTC will be cleared when C counter is counted once without the same malfunction after DTC is stored in ECM.

RELATIONSHIP BETWEEN MIL, DTC, 1ST TRIP DTC AND DRIVING PATTERNS EXCEPT FOR “MISFIRE <EXHAUST QUALITY DETERIORATION>”, “FUEL INJECTION SYSTEM”

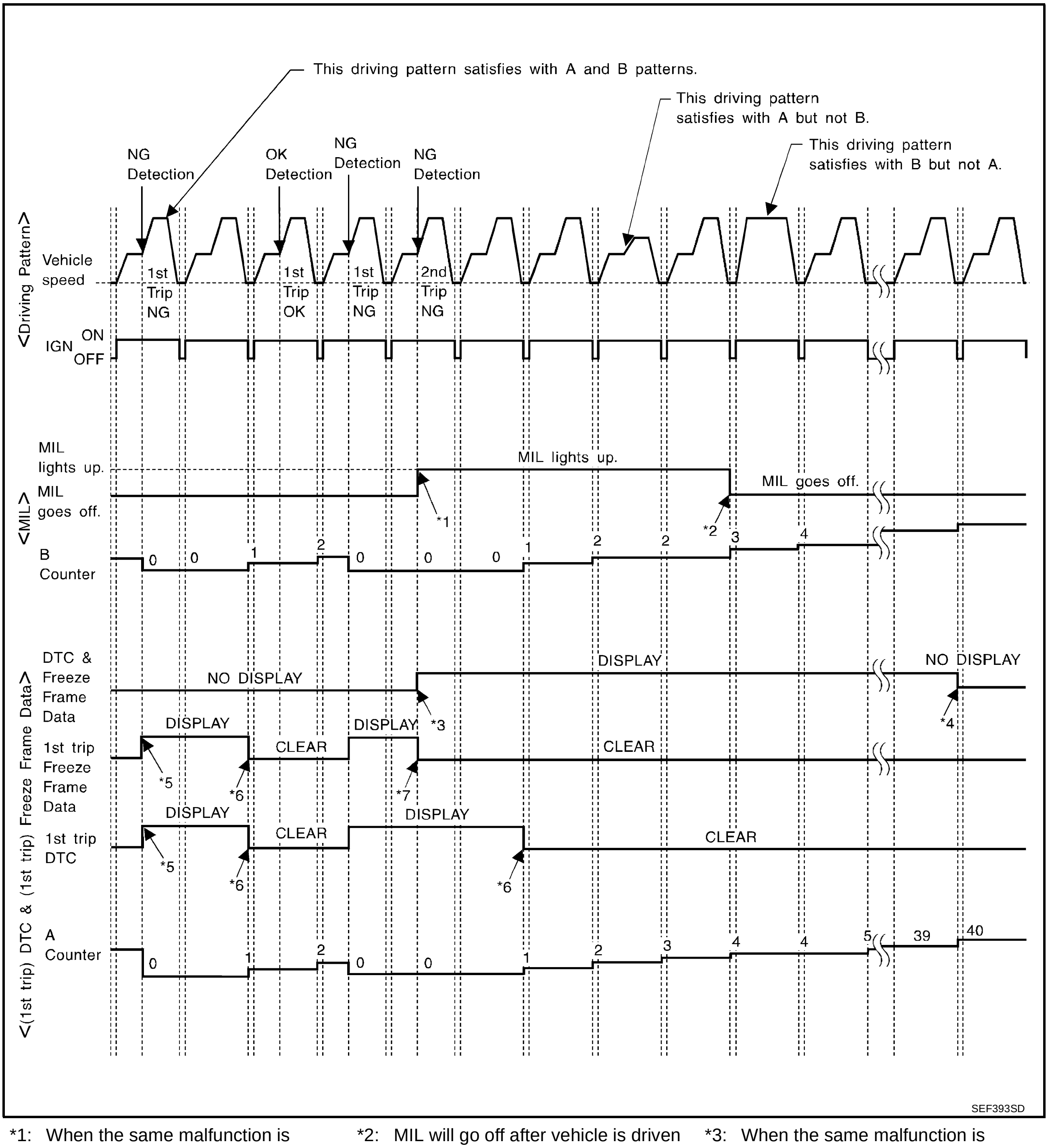

*1: When the same malfunction is detected in two consecutive trips, MIL will light up.

*2: MIL will go off after vehicle is driven 3 times (pattern B) without any malfunctions.

*3: When the same malfunction is detected in two consecutive trips, the DTC and the freeze frame data will be stored in ECM.

*4: The DTC and the freeze frame data will not be displayed any longer after vehicle is driven 40 times (pattern A) without the same malfunction.
(The DTC and the freeze frame data still remain in ECM.)

*5: When a malfunction is detected for the 1st time, the 1st trip DTC and the 1st trip freeze frame data will be stored in ECM.

*6: 1st trip DTC will be cleared after vehicle is driven once (pattern B) without the same malfunction.

*7: When the same malfunction is detected in the 2nd trip, the 1st trip freeze frame data will be cleared.

A
EC
C
D
E
F
G
H
I
J
K
L
M

EXPLANATION FOR DRIVING PATTERNS EXCEPT FOR “MISFIRE <EXHAUST QUALITY DETERIORATION>”, “FUEL INJECTION SYSTEM”

<Driving Pattern A>

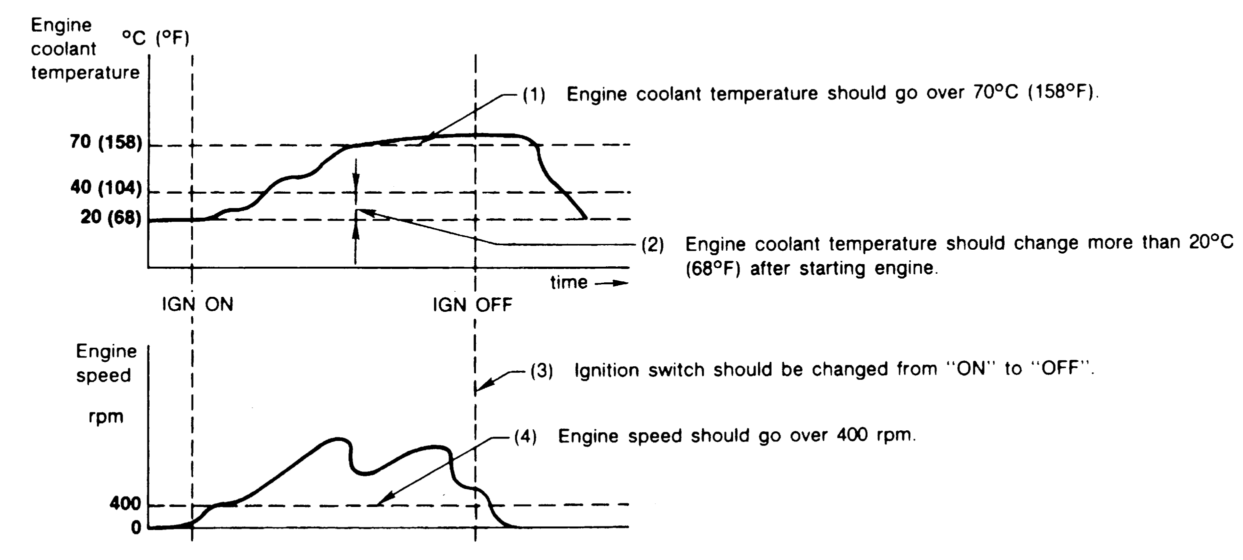

AEC574

- The A counter will be cleared when the malfunction is detected regardless of (1) - (4).
- The A counter will be counted up when (1) - (4) are satisfied without the same malfunction.
- The DTC will not be displayed after the A counter reaches 40 (*2 in “OBD SYSTEM OPERATION CHART”).

<Driving Pattern B>

Driving pattern B means the vehicle operation as follows:
All components and systems should be monitored at least once by the OBD system.

- The B counter will be cleared when the malfunction is detected once regardless of the driving pattern.
- The B counter will be counted up when driving pattern B is satisfied without any malfunctions.
- The MIL will go off when the B counter reaches 3 (*2 in “OBD SYSTEM OPERATION CHART”).

BASIC SERVICE PROCEDURE

PFP:00018

Basic Inspection

ABS00DCV

1. INSPECTION START

1. Check service records for any recent repairs that may indicate a related malfunction, or a current need for scheduled maintenance.
2. Open engine hood and check the following:
   - Harness connectors for improper connections
   - Wiring harness for improper connections, pinches and cut
   - Vacuum hoses for splits, kinks and improper connections
   - Hoses and ducts for leaks
   - Air cleaner clogging
   - Gasket

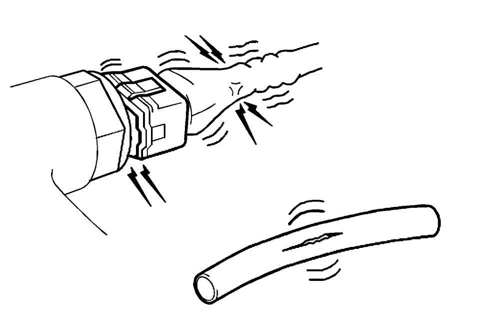

SEF983U

3. Confirm that electrical or mechanical loads are not applied.
   - Headlamp switch is OFF.
   - Air conditioner switch is OFF.
   - Rear window defogger switch is OFF.
   - Steering wheel is in the straight-ahead position, etc.
4. Start engine and warm it up until engine coolant temperature indicator points the middle of gauge.
   Ensure engine stays below 1,000 rpm.

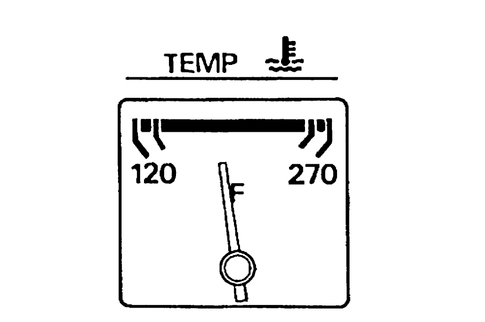

SEF976U

5. Run engine at about 2,000 rpm for about 2 minutes under no-load.
6. Make sure that no DTC is displayed with CONSULT-II or GST.

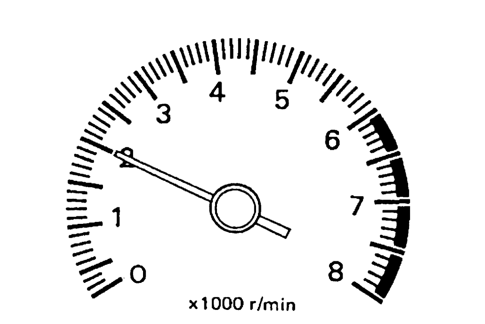

SEF977U

OK or NG

OK >> GO TO 3.
NG >> GO TO 2.

2. REPAIR OR REPLACE

Repair or replace components as necessary according to corresponding Diagnostic Procedure.

>> GO TO 3.

3. CHECK TARGET IDLE SPEED

With CONSULT-II

1. Run engine at about 2,000 rpm for about 2 minutes under no-load.
2. Rev engine (2,000 to 3,000 rpm) 2 or 3 times under no-load, then run engine at idle speed for about 1 minute.

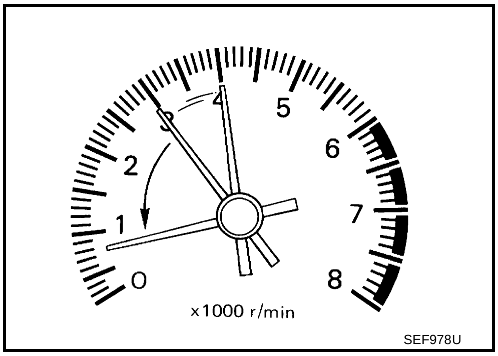

SEF978U

3. Read idle speed in “DATA MONITOR” mode with CONSULT-II. Refer to EC-75, "IDLE SPEED".

   M/T: 700 ± 50 rpm (in Neutral position)
   A/T: 700 ± 50 rpm (in P or N position)

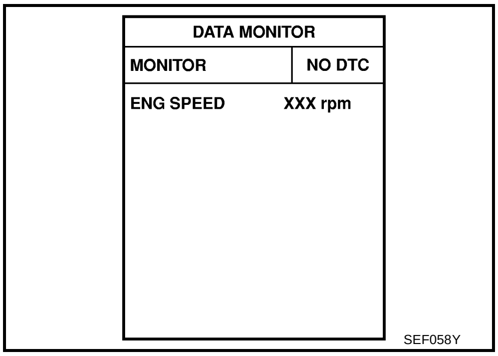

SEF058Y

Without CONSULT-II

1. Run engine at about 2,000 rpm for about 2 minutes under no-load.
2. Rev engine (2,000 to 3,000 rpm) 2 or 3 times under no-load, then run engine at idle speed for about 1 minute.
3. Check idle speed. Refer to EC-75, "IDLE SPEED"

   M/T: 700 ± 50 rpm (in Neutral position)
   A/T: 700 ± 50 rpm (in P or N position)

OK or NG

OK >> GO TO 10.
NG >> GO TO 4.

4. PERFORM ACCELERATOR PEDAL RELEASED POSITION LEARNING

1. Stop engine.
2. Perform EC-88, "Accelerator Pedal Released Position Learning" .

>> GO TO 5.

5. PERFORM THROTTLE VALVE CLOSED POSITION LEARNING

Perform EC-88, "Throttle Valve Closed Position Learning" .

>> GO TO 6.

6. PERFORM IDLE AIR VOLUME LEARNING

Refer to EC-88, "Idle Air Volume Learning" .

Is Idle Air Volume Learning carried out successfully?

Yes or No

Yes >> GO TO 7.

No >> 1. Follow the instruction of Idle Air Volume Learning.

2. GO TO 4.

7. CHECK TARGET IDLE SPEED AGAIN

With CONSULT-II

1. Start engine and warm it up to normal operating temperature.
2. Read idle speed in “DATA MONITOR” mode with CONSULT-II.
   Refer to EC-75, "IDLE SPEED"

   M/T: 700 ± 50 rpm (in Neutral position)
   A/T: 700 ± 50 rpm (in P or N position)

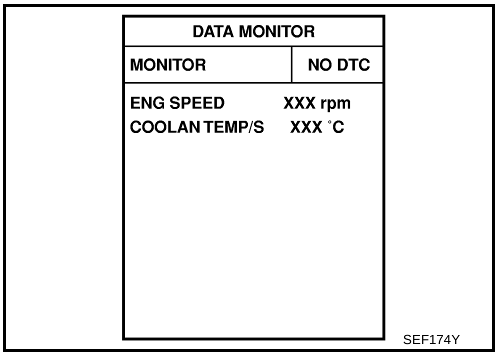

Without CONSULT-II

1. Start engine and warm it up to normal operating temperature.
2. Check idle speed.
   Refer to EC-75, "IDLE SPEED"

   M/T: 700 ± 50 rpm (in Neutral position)
   A/T: 700 ± 50 rpm (in P or N position)

OK or NG

OK >> GO TO 10.

NG >> GO TO 8.

8. DETECT MALFUNCTIONING PART

Check the following.

- Check camshaft position sensor (PHASE) and circuit. Refer to EC-318 .
- Check crankshaft position sensor (POS) and circuit. Refer to EC-310 .

OK or NG

OK >> GO TO 9.

NG >> 1. Repair or replace.

2. GO TO 4.

9. CHECK ECM FUNCTION

1. Substitute another known-good ECM to check ECM function. (ECM may be the cause of an incident, but this is a rare case.)
2. Perform initialization of NVIS (NATS) system and registration of all NVIS (NATS) ignition key IDs. Refer to EC-46, "NVIS (NISSAN VEHICLE IMMOBILIZER SYSTEM-NATS)" .

>> GO TO 4.

10. CHECK IGNITION TIMING

1. Run engine at idle.
2. Check ignition timing with a timing light.
   Refer to EC-75, "IGNITION TIMING"

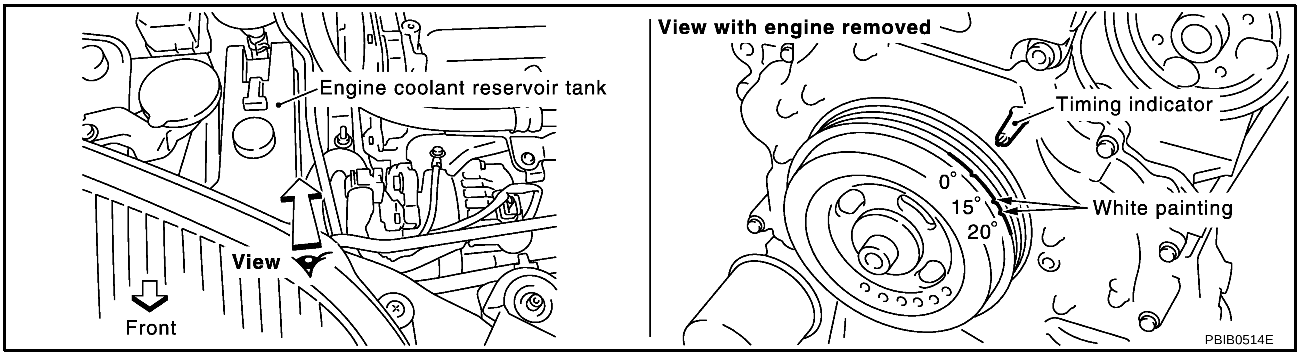

M/T: 15 ± 5° BTDC (in Neutral position)
A/T: 15 ± 5° BTDC (in P or N position)

OK or NG

OK >> GO TO 19.
NG >> GO TO 11.

11. PERFORM ACCELERATOR PEDAL RELEASED POSITION LEARNING

1. Stop engine.
2. Perform EC-88, "Accelerator Pedal Released Position Learning" .

>> GO TO 12.

12. PERFORM THROTTLE VALVE CLOSED POSITION LEARNING

Perform EC-88, "Throttle Valve Closed Position Learning" .

>> GO TO 13.

13. PERFORM IDLE AIR VOLUME LEARNING

Refer to EC-88, "Idle Air Volume Learning" .
Is Idle Air Volume Learning carried out successfully?

Yes or No

Yes >> GO TO 14.
No >> 1. Follow the instruction of Idle Air Volume Learning.
2. GO TO 4.

14. CHECK TARGET IDLE SPEED AGAIN

With CONSULT-II

1. Start engine and warm it up to normal operating temperature.
2. Read idle speed in "DATA MONITOR" mode with CONSULT-II.
   Refer to EC-75, "IDLE SPEED"

   M/T: 700 ± 50 rpm (in Neutral position)
   A/T: 700 ± 50 rpm (in P or N position)

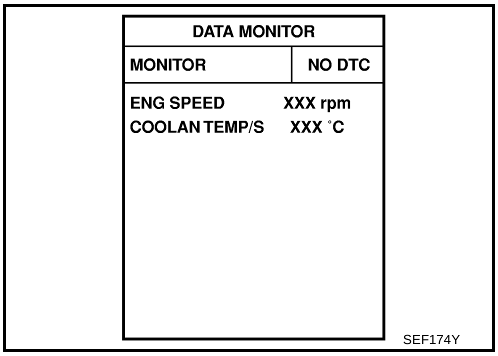

Without CONSULT-II

1. Start engine and warm it up to normal operating temperature.
2. Check idle speed. Refer to EC-75, "IDLE SPEED"

   M/T: 700 ± 50 rpm (in Neutral position)
   A/T: 700 ± 50 rpm (in P or N position)

OK or NG

OK >> GO TO 15.
NG >> GO TO 17.

15. CHECK IGNITION TIMING AGAIN

1. Run engine at idle.
2. Check ignition timing with a timing light.
   Refer to EC-75, "IGNITION TIMING"

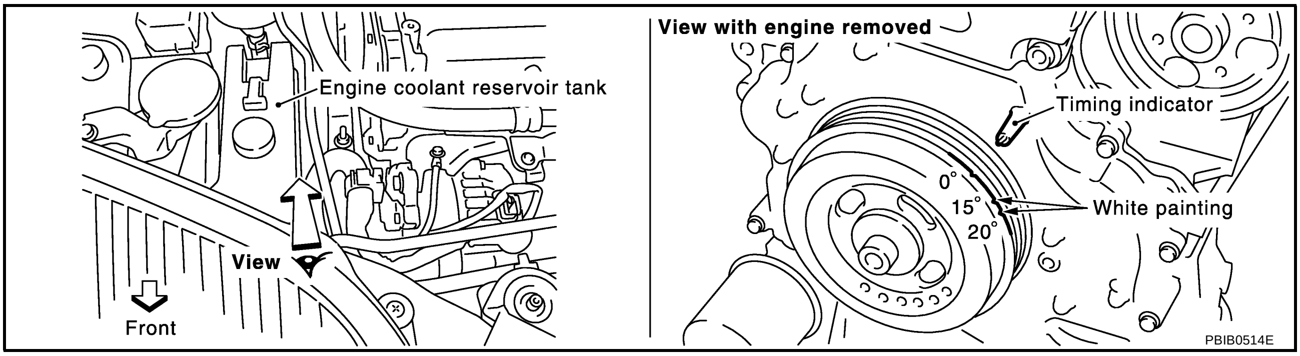

M/T: 15 ± 5° BTDC (in Neutral position)
A/T: 15 ± 5° BTDC (in P or N position)

OK or NG

OK >> GO TO 19.
NG >> GO TO 16.

16. CHECK TIMING CHAIN INSTALLATION

Check timing chain installation. Refer to EM-49, "TIMING CHAIN" .

OK or NG

OK >> GO TO 17.
NG >> 1. Repair the timing chain installation.
2. GO TO 4.

17. DETECT MALFUNCTIONING PART

Check the following.

- Check camshaft position sensor (PHASE) and circuit. Refer to EC-318 .
- Check crankshaft position sensor (POS) and circuit. Refer to EC-310 .

OK or NG

OK >> GO TO 18.
NG >> 1. Repair or replace.
2. GO TO 4.

18. CHECK ECM FUNCTION

1. Substitute another known-good ECM to check ECM function. (ECM may be the cause of an incident, but this is a rare case.)
2. Perform initialization of NVIS (NATS) system and registration of all NVIS (NATS) ignition key IDs. Refer to EC-46, "NVIS (NISSAN VEHICLE IMMOBILIZER SYSTEM-NATS)" .

>> GO TO 4.

19. INSPECTION END

Did you replace the ECM, referring this Basic Inspection procedure?

Yes or No

Yes >> 1. Perform EC-87, "VIN Registration"
2. **INSPECTION END**

No >> **INSPECTION END**

Idle Speed and Ignition Timing Check

ABS00CL1

IDLE SPEED

With CONSULT-II

Start engine and warm it up to normal operating temperature.

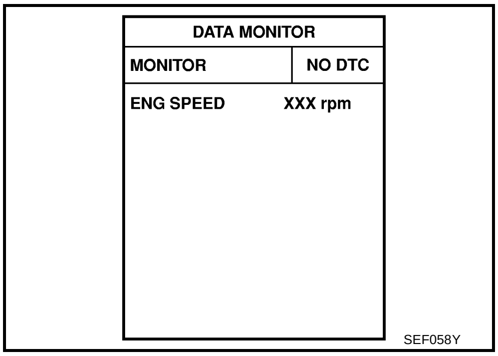

SEF058Y

With GST

Check idle speed in Service $01 with GST.

IGNITION TIMING

Any of following two methods may be used.

Method A

1. Slide the harness protector off the ignition coil No.1 to clear the wires.

2. Attach timing light to the wires.

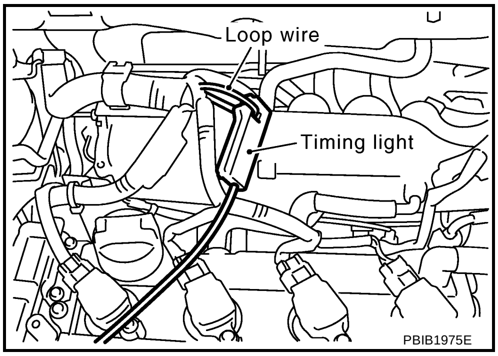

3. Check ignition timing.

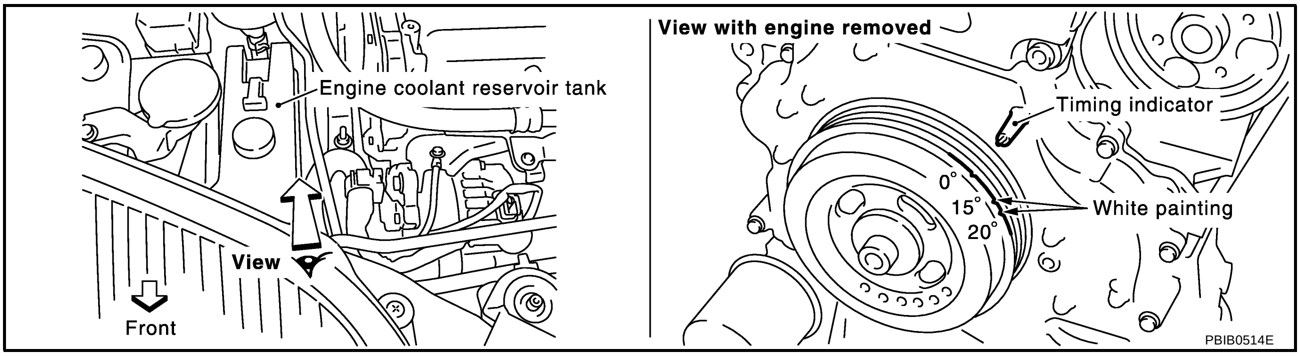

Method B

1. Remove No. 1 ignition coil.

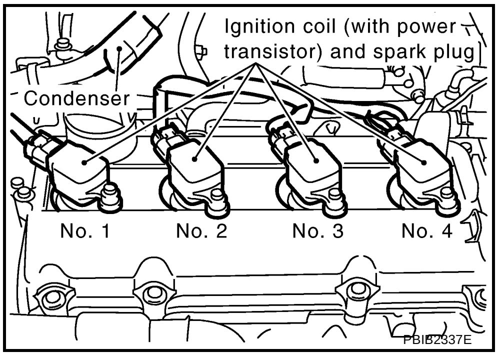

2. Connect No. 1 ignition coil and No. 1 spark plug with suitable high-tension wire as shown, and attach timing light clamp to this wire.

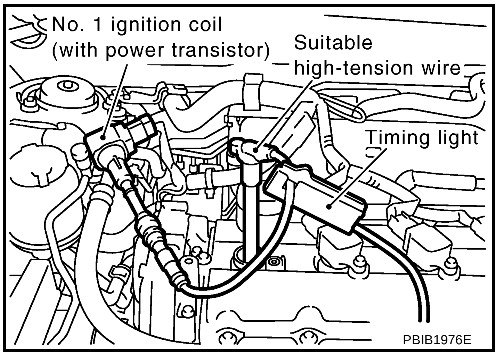

A
EC
C
D
E
F
G
H
I
J
K
L
M

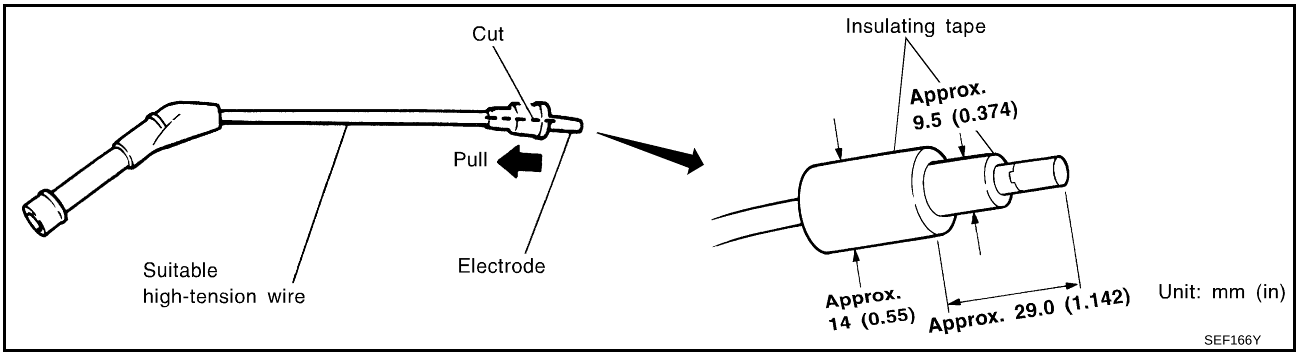

SEF166Y

3. Check ignition timing.

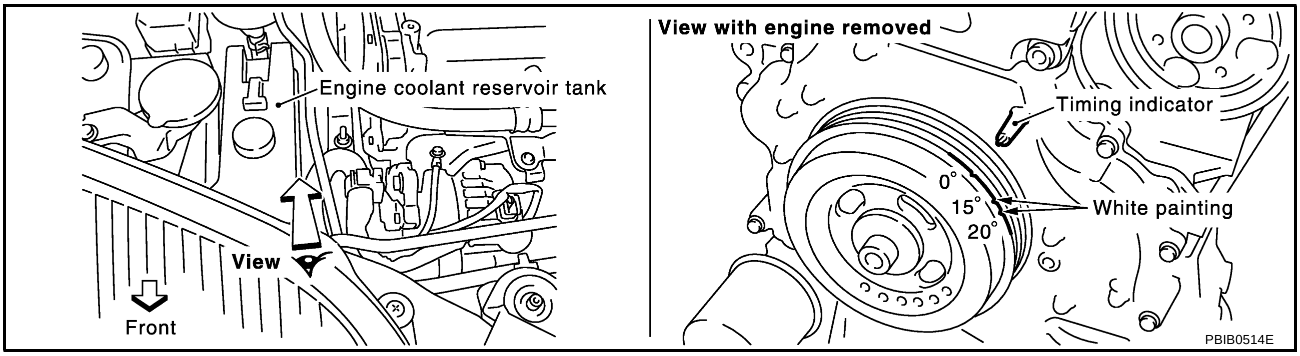

PBIB0514E

Idle Mixture Ratio Adjustment

ABS00CL2

PREPARATION

1. Make sure that the following parts are in good order.
   - Battery
   - Ignition system
   - Engine oil and coolant levels
   - Fuses
   - ECM harness connector
   - Vacuum hoses
   - Air intake system
     (Oil filler cap, oil level gauge, etc.)
   - Fuel pressure
   - Engine compression
   - Throttle valve
   - Evaporative emission system
2. On air conditioner equipped models, checks should be carried out while the air conditioner is OFF.
3. On automatic transmission equipped models, when checking idle rpm, ignition timing and mixture ratio, checks should be carried out while shift lever is in P or N position.
4. When measuring CO percentage, insert probe more than 40 cm (15.7 in) into tail pipe.
5. Turn OFF headlamp, heater blower, rear window defogger.
6. Keep front wheels pointed straight ahead.

OVERALL SEQUENCE

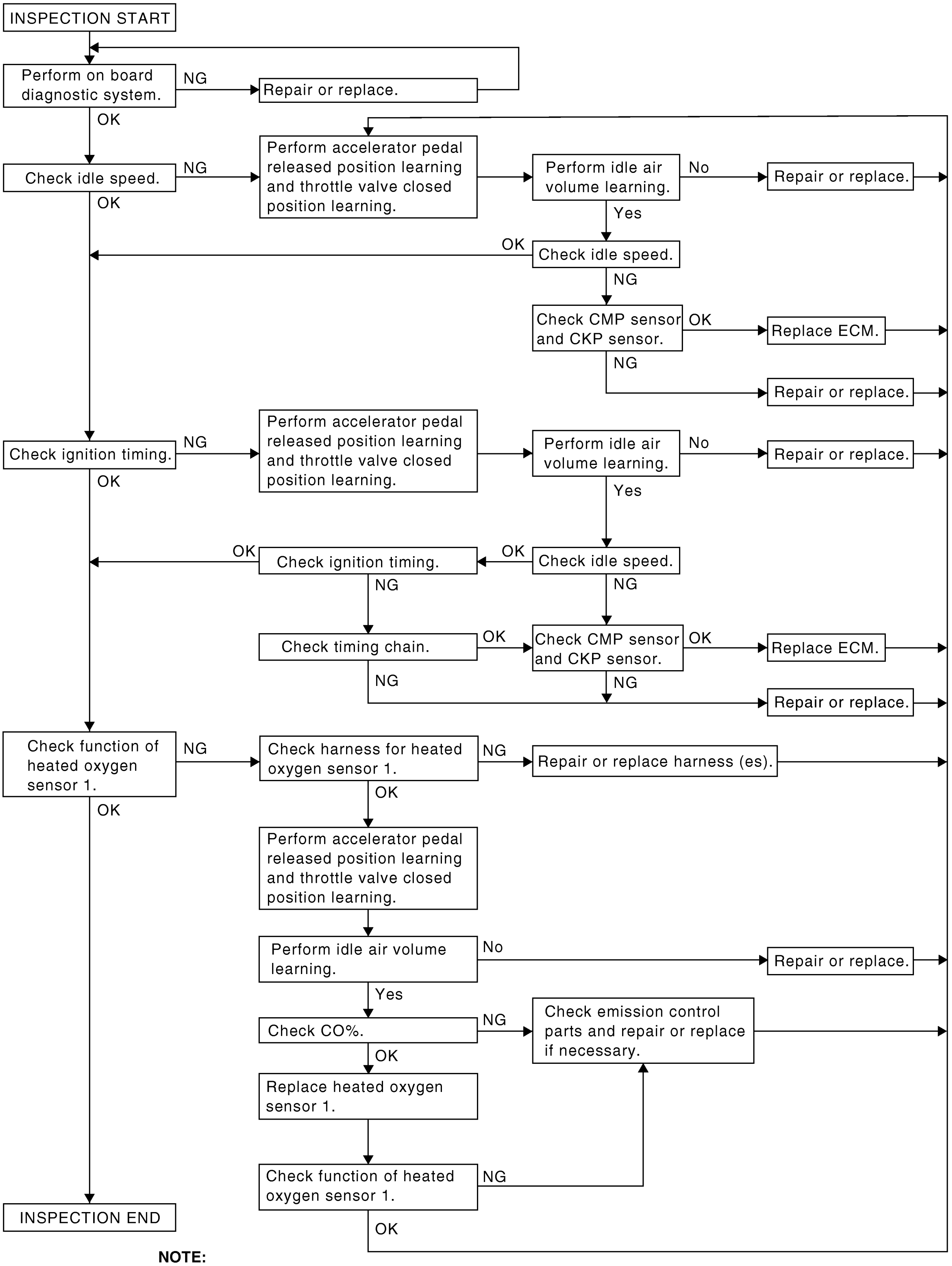

NOTE:
If a vehicle contains a part which is operating outside of design specifications with no MIL illumination, the part shall not be replaced prior to emission testing unless it is determined that the part has been tampered with or abused in such a way that the diagnostic system cannot reasonably be expected to detect the resulting malfunction.

PBIB2001E

DETAILED PROCEDURE

1. INSPECTION START

1. Check service records for any recent repairs that may indicate a related malfunction, or a current need for scheduled maintenance.
2. Open engine hood and check the following:
   - Harness connectors for improper connections
   - Wiring harness for improper connections, pinches and cut
   - Vacuum hoses for splits, kinks and improper connections
   - Hoses and ducts for leaks
   - Air cleaner clogging
   - Gasket

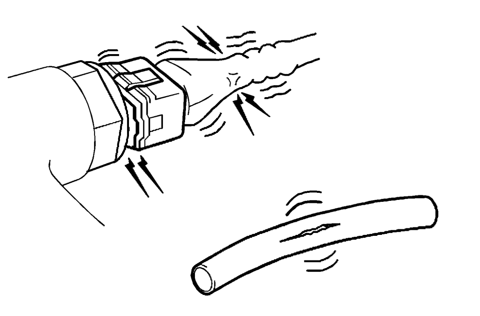

SEF983U

3. Confirm that electrical or mechanical loads are not applied.
   - Headlamp switch is OFF.
   - Air conditioner switch is OFF.
   - Rear window defogger switch is OFF.
   - Steering wheel is in the straight-ahead position, etc.
4. Start engine and warm it up until engine coolant temperature indicator points the middle of gauge.
   Ensure engine stays below 1,000 rpm.

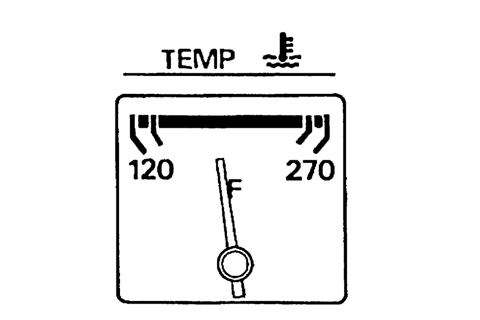

SEF976U

5. Run engine at about 2,000 rpm for about 2 minutes under no-load.
6. Make sure that no DTC is displayed with CONSULT-II or GST.

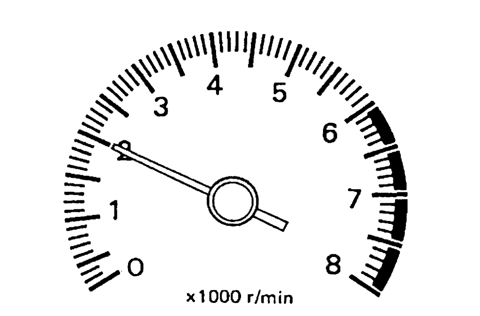

SEF977U

OK or NG

OK >> GO TO 3.
NG >> GO TO 2.

2. REPAIR OR REPLACE

Repair or replace components as necessary according to corresponding Diagnostic Procedure.

>> GO TO 3.

3. CHECK TARGET IDLE SPEED

With CONSULT-II

1. Run engine at about 2,000 rpm for about 2 minutes under no-load.
2. Rev engine (2,000 to 3,000 rpm) 2 or 3 times under no-load, then run engine at idle speed for about 1 minute.

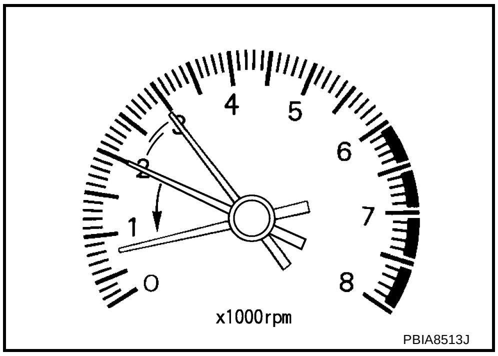

3. Read idle speed in “DATA MONITOR” mode with CONSULT-II. Refer to EC-75, "IDLE SPEED" .

M/T: 700 ± 50 rpm (in Neutral position)

A/T: 700 ± 50 rpm (in P or N position)

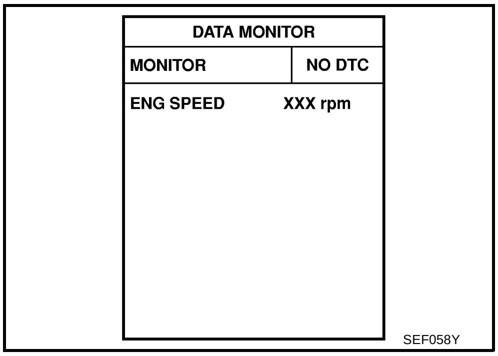

Without CONSULT-II

1. Run engine at about 2,000 rpm for about 2 minutes under no-load.
2. Rev engine (2,000 to 3,000 rpm) 2 or 3 times under no-load, then run engine at idle speed for about 1 minute.
3. Check idle speed. Refer to EC-75, "IDLE SPEED" .

M/T: 700 ± 50 rpm (in Neutral position)

A/T: 700 ± 50 rpm (in P or N position)

OK or NG

OK >> GO TO 10.
NG >> GO TO 4.

4. PERFORM ACCELERATOR PEDAL RELEASED POSITION LEARNING

1. Stop engine.
2. Perform EC-88, "Accelerator Pedal Released Position Learning" .

>> GO TO 5.

5. PERFORM THROTTLE VALVE CLOSED POSITION LEARNING

Perform EC-88, "Throttle Valve Closed Position Learning" .

>> GO TO 6.

6. PERFORM IDLE AIR VOLUME LEARNING

Perform EC-88, "Idle Air Volume Learning" .
Is Idle Air Volume Learning carried out successfully?

Yes or No

Yes >> GO TO 7.
No >> 1. Follow the instruction of Idle Air Volume Learning.
2. GO TO 4.

7. CHECK TARGET IDLE SPEED AGAIN

With CONSULT-II

1. Start engine and warm it up to normal operating temperature.
2. Read idle speed in “DATA MONITOR” mode with CONSULT-II. Refer to EC-75, "IDLE SPEED" .

M/T: 700 ± 50 rpm (in Neutral position)
A/T: 700 ± 50 rpm (in P or N position)

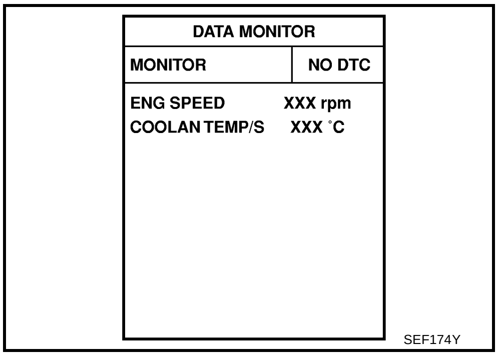

Without CONSULT-II

1. Start engine and warm it up to normal operating temperature.
2. Check idle speed. Refer to EC-75, "IDLE SPEED" .

M/T: 700 ± 50 rpm (in Neutral position)
A/T: 700 ± 50 rpm (in P or N position)

OK or NG

OK >> GO TO 10.
NG >> GO TO 8.

8. DETECT MALFUNCTIONING PART

Check the following.

- Check camshaft position sensor (PHASE) and circuit. Refer to EC-318 .
- Check crankshaft position sensor (POS) and circuit. Refer to EC-310 .

OK or NG

OK >> GO TO 9.
NG >> 1. Repair or replace.
2. GO TO 4.

9. CHECK ECM FUNCTION

1. Substitute another known-good ECM to check ECM function. (ECM may be the cause of an incident, but this is a rare case.)
2. Perform initialization of NVIS (NATS) system and registration of all NVIS (NATS) ignition key IDs. Refer to EC-46, "NVIS (NISSAN VEHICLE IMMOBILIZER SYSTEM-NATS)" .

>> GO TO 4.

10. CHECK IGNITION TIMING

1. Run engine at idle.
2. Check ignition timing with a timing light. Refer to EC-75, "IGNITION TIMING" .

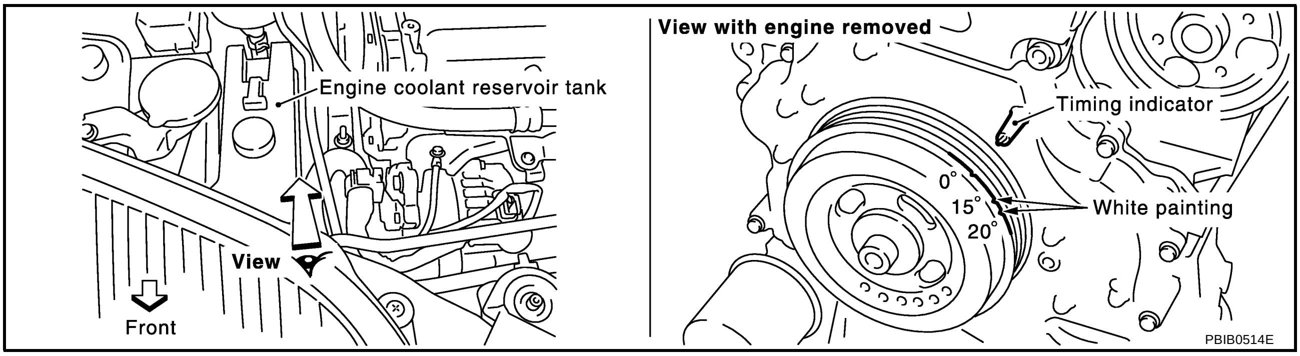

M/T: 15 ± 5° BTDC (in Neutral position)

A/T: 15 ± 5° BTDC (in P or N position)

OK or NG

OK (With CONSULT-II)>>GO TO 19.
OK (Without CONSULT-II)>>GO TO 20.
NG >> GO TO 11.

11. PERFORM ACCELERATOR PEDAL RELEASED POSITION LEARNING

1. Stop engine.
2. Perform EC-88, "Accelerator Pedal Released Position Learning" .

>> GO TO 12.

12. PERFORM THROTTLE VALVE CLOSED POSITION LEARNING

Perform EC-88, "Throttle Valve Closed Position Learning" .

>> GO TO 13.

13. PERFORM IDLE AIR VOLUME LEARNING

Perform EC-88, "Idle Air Volume Learning" .
Is Idle Air Volume Learning carried out successfully?

Yes or No

Yes >> GO TO 14.
No >> 1. Follow the instruction of Idle Air Volume Learning.
2. GO TO 4.

14. CHECK TARGET IDLE SPEED AGAIN

With CONSULT-II

1. Start engine and warm it up to normal operating temperature.
2. Read idle speed in “DATA MONITOR” mode with CONSULT-II.
   Refer to EC-75, "IDLE SPEED" .

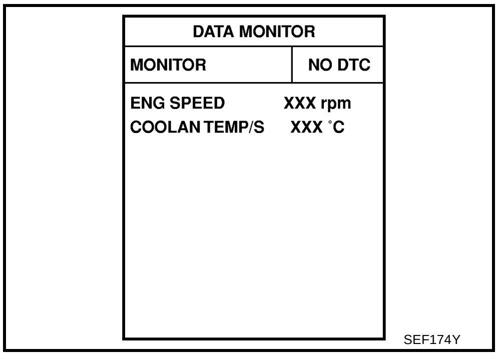

M/T: 700 $\pm$ 50 rpm (in Neutral position)
A/T: 700 $\pm$ 50 rpm (in P or N position)

Without CONSULT-II

1. Start engine and warm it up to normal operating temperature.
2. Check idle speed. Refer to EC-75, "IDLE SPEED" .

M/T: 700 $\pm$ 50 rpm (in Neutral position)
A/T: 700 $\pm$ 50 rpm (in P or N position)

OK or NG

OK >> GO TO 15.
NG >> GO TO 17.

15. CHECK IGNITION TIMING AGAIN

1. Run engine at idle.
2. Check ignition timing with a timing light. Refer to EC-75, "IGNITION TIMING" .

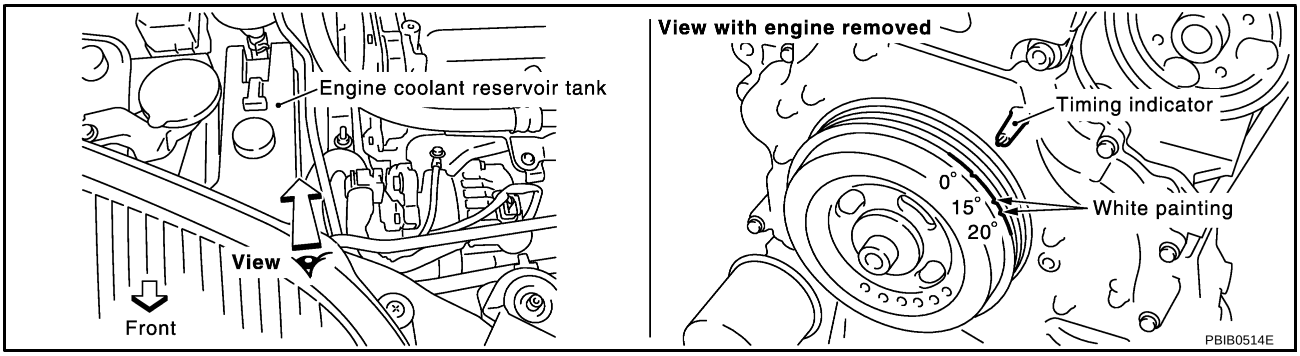

M/T: 15 $\pm$ 5° BTDC (in Neutral position)
A/T: 15 $\pm$ 5° BTDC (in P or N position)

OK or NG

OK (With CONSULT-II)>>GO TO 19.
OK (Without CONSULT-II)>>GO TO 20.
NG >> GO TO 16.

16. CHECK TIMING CHAIN INSTALLATION

Check timing chain installation. Refer to EM-49, "TIMING CHAIN" .

OK or NG

OK >> GO TO 17.
NG >> 1. Repair the timing chain installation.
2. GO TO 4.

17. DETECT MALFUNCTIONING PART

Check the following.

- Check camshaft position sensor (PHASE) and circuit. Refer to EC-318 .
- Check crankshaft position sensor (POS) and circuit. Refer to EC-310 .

OK or NG

OK >> GO TO 18.
NG >> 1. Repair or replace.
2. GO TO 4.

18. CHECK ECM FUNCTION

1. Substitute another known-good ECM to check ECM function. (ECM may be the cause of an incident, but this is a rare case.)
2. Perform initialization of NVIS (NATS) system and registration of all NVIS (NATS) ignition key IDs. Refer to EC-46, "NVIS (NISSAN VEHICLE IMMOBILIZER SYSTEM-NATS)" .

>> GO TO 4.

19. CHECK HEATED OXYGEN SENSOR 1 SIGNAL

With CONSULT-II

1. Run engine at about 2,000 rpm for about 2 minutes under no-load.
2. See “HO2S1 MNTR (B1)” in “DATA MONITOR” mode.
3. Running engine at 2,000 rpm under no-load (The engine is warmed up to normal operating temperature.), check that the monitor fluctuates between LEAN and RICH more than 5 times during 10 seconds.

1 time: RICH → LEAN → RICH

2 times: RICH → LEAN → RICH → LEAN → RICH

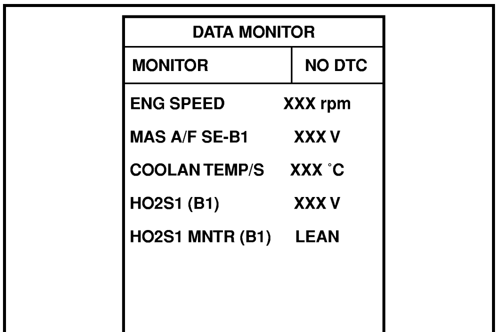

SEF646Y

OK or NG

OK >> **INSPECTION END**
NG (Monitor does not fluctuate.)>>GO TO 21.
NG (Monitor fluctuates less than 5 times.)>>GO TO 28.

20. CHECK HEATED OXYGEN SENSOR 1 SIGNAL

Without CONSULT-II

1. Stop engine and set ECM to Self-diagnostic mode II (Heated oxygen sensor 1 monitor). Refer to EC-62, "HOW TO SWITCH DIAGNOSTIC TEST MODE" .
2. Start engine and run it at about 2,000 rpm for about 2 minutes under no-load.
3. Running engine at 2,000 rpm under no-load (The engine is warmed up to normal operating temperature.), check that the MIL comes on more than 5 times during 10 seconds.

OK or NG

OK >> **INDPECTION END**
NG (MIL does not come on)>>GO TO 21.
NG (MIL comes on less than 5 times)>>GO TO 28.

21. CHECK HEATED OXYGEN SENSOR 1 HARNESS

1. Turn ignition switch OFF.
2. Disconnect ECM harness connector.
3. Disconnect heated oxygen sensor 1 harness connector.
4. Check harness continuity between ECM terminal 35 and heated oxygen sensor 1 terminal 1.
   Refer to EC-228, "Wiring Diagram" .

   Continuity should exist.

5. Also check harness for short to ground and short to power.

OK or NG

OK >> GO TO 22.
NG >> 1. Repair or replace harness between ECM and heated oxygen sensor 1.
2. GO TO 4.

22. PERFORM ACCELERATOR PEDAL RELEASED POSITION LEARNING

1. Reconnect ECM harness connector.
2. Perform EC-88, "Accelerator Pedal Released Position Learning" .

>> GO TO 23.

23. PERFORM THROTTLE VALVE CLOSED POSITION LEARNING

Perform EC-88, "Throttle Valve Closed Position Learning" .

>> GO TO 24.

24. PERFORM IDLE AIR VOLUME LEARNING

Refer to EC-88, "Idle Air Volume Learning" .
Is the Idle Air Volume Learning carried out successfully?

Yes or No

Yes (With CONSULT-II)>>GO TO 25.
Yes (Without CONSULT-II)>> GO TO 26.
No >> 1. Follow the instruction of Idle Air Volume Learning.
2. GO TO 4.

25. CHECK CO%

With CONSULT-II

1. Start engine and warm it up until engine coolant temperature indicator points the middle of gauge.
2. Turn ignition switch OFF, wait at least 10 seconds and then turn ON.
3. Select “ENG COOLANT TEMP” in “ACTIVE TEST” mode.
4. Set “ENG COOLANT TEMP” to 5°C (41°F) by touching “DOWN” and “Qd”.
5. Start engine and rev it (2,000 to 3,000 rpm) 2 or 3 times under no-load, then run engine at idle speed.
6. Check CO%.

   Idle CO: 0.3 – 9.5% and engine runs smoothly.

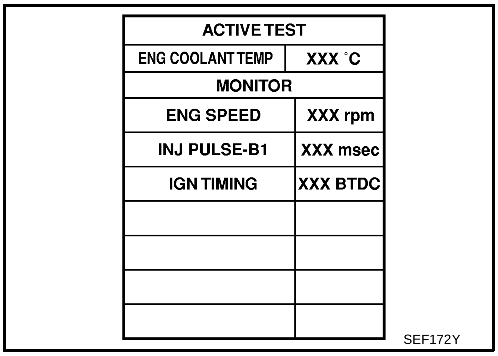

SEF172Y

OK or NG

OK >> GO TO 28.
NG >> GO TO 27.

26. CHECK CO%

Without CONSULT-II

1. Start engine and warm it up until engine coolant temperature indicator points to the middle of gauge.
2. Turn ignition switch OFF.
3. Disconnect engine coolant temperature sensor harness connector.
4. Connect a resistor (4.4 kΩ) between terminals of engine coolant temperature sensor harness connector.
5. Start engine and rev it (2,000 to 3,000 rpm) 2 or 3 times under no-load, then run engine at idle speed.
6. Check CO%.

   Idle CO: 0.3 – 9.5% and engine runs smoothly.

7. After checking CO%, turn ignition switch OFF, disconnect the resistor from the terminals of engine coolant temperature sensor harness connector, and then connect engine coolant temperature sensor harness connector to engine coolant temperature sensor.

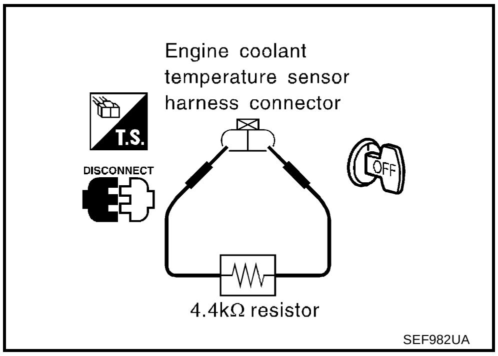

SEF982UA

OK or NG

OK >> GO TO 28.
NG >> GO TO 27.

27. RECONNECT HEATED OXYGEN SENSOR 1 HARNESS CONNECTOR

1. Turn ignition switch OFF.
2. Reconnect heated oxygen sensor 1 harness connector.

>> GO TO 31.

28. REPLACE HEATED OXYGEN SENSOR 1

1. Stop engine.
2. Replace heated oxygen sensor 1.

With CONSULT-II>>GO TO 29.
Without CONSULT-II>>GO TO 30.

29. CHECK HEATED OXYGEN SENSOR 1 SIGNAL

With CONSULT-II

1. Start engine and warm it up until engine coolant temperature indicator points the middle of gauge.
2. See “HO2S1 MNTR (B1)” in “DATA MONITOR” mode.
3. Running engine at 2,000 rpm under no-load (The engine is warmed up to normal operating temperature.), check that the monitor fluctuates between LEAN and RICH more than 5 times during 10 seconds.

   1 time: RICH → LEAN → RICH
   2 times: RICH → LEAN → RICH → LEAN → RICH

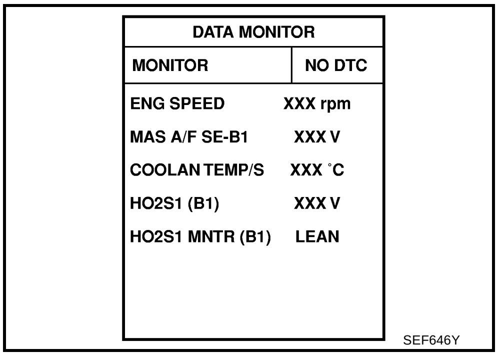

SEF646Y

OK or NG

OK >> GO TO 4.
NG >> GO TO 31.

30. CHECK HEATED OXYGEN SENSOR 1 SIGNAL

Without CONSULT-II

1. Set ECM to Self-diagnostic mode II (Heated oxygen sensor 1 monitor). Refer to EC-63, "How to Set Diagnostic Test Mode II (Heated Oxygen Sensor 1 Monitor)" .
2. Running engine at 2,000 rpm under no-load (The engine is warmed up to normal operating temperature.), check that the MIL comes on more than 5 times during 10 seconds.

OK or NG

OK >> GO TO 4.
NG >> GO TO 31.

31. DETECT MALFUNCTIONING PART

Check the following.

- Check fuel pressure regulator and repair or replace if necessary.
  Refer to EC-90 .
- Check mass air flow sensor and its circuit, and repair or replace if necessary.
  Refer to EC-181 , EC-190 .
- Check injector and its circuit, and repair or replace if necessary.
  Refer to EC-607 .
- Check engine coolant temperature sensor and its circuit, and repair or replace if necessary.
  Refer to EC-204 and EC-218 .

OK or NG

OK >> GO TO 33.
NG >> 1. Repair or replace.
2. GO TO 32.

32. ERASE UNNECESSARY DTC

After this inspection, unnecessary DTC might be displayed.
Erase the stored memory in ECM and TCM.
Refer to EC-59, "HOW TO ERASE EMISSION-RELATED DIAGNOSTIC INFORMATION" and AT-40, "HOW TO ERASE DTC" .

>> GO TO 4.

33. CHECK ECM FUNCTION

1. Substitute another known-good ECM to check ECM function. (ECM may be the cause of an incident, but this is the rarely the case.)
2. Perform initialization of NVIS (NATS) system and registration of all NVIS (NATS) ignition key IDs.
   Refer to EC-46, "NVIS (NISSAN VEHICLE IMMOBILIZER SYSTEM-NATS)" .

>> GO TO 4.

VIN Registration

ABS00D7Y

DESCRIPTION

VIN Registration is an operation to registering VIN in ECM. It must be performed each time ECM is replaced.

NOTE:
Accurate VIN which is registered in ECM may be required for Inspection & Maintenance (I/M).

OPERATION PROCEDURE

With CONSULT-II

1. Check the VIN of the vehicle and note it. Refer to GI-49, "IDENTIFICATION INFORMATION" .
2. Turn ignition switch ON and engine stopped.

3. Select “VIN REGISTRATION” in “WORK SUPPORT” mode.
4. Follow the instruction of CONSULT-II display.

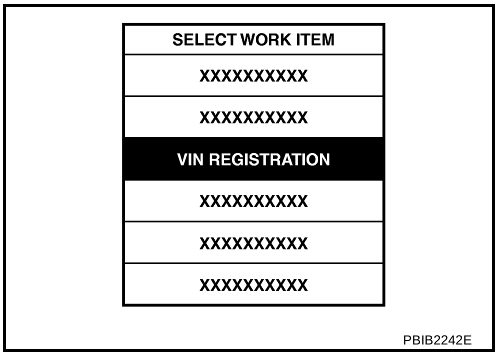

Accelerator Pedal Released Position Learning

ABS00CL3

DESCRIPTION

Accelerator Pedal Released Position Learning is an operation to learn the fully released position of the accelerator pedal by monitoring the accelerator pedal position sensor output signal. It must be performed each time harness connector of accelerator pedal position sensor or ECM is disconnected.

OPERATION PROCEDURE

1. Make sure that accelerator pedal is fully released.
2. Turn ignition switch ON and wait at least 2 seconds.
3. Turn ignition switch OFF and wait at least 10 seconds.
4. Turn ignition switch ON and wait at least 2 seconds.
5. Turn ignition switch OFF and wait at least 10 seconds.

Throttle Valve Closed Position Learning

ABS00CL4

DESCRIPTION

Throttle Valve Closed Position Learning is an operation to learn the fully closed position of the throttle valve by monitoring the throttle position sensor output signal. It must be performed each time harness connector of electric throttle control actuator or ECM is disconnected.

OPERATION PROCEDURE

1. Make sure that accelerator pedal is fully released.
2. Turn ignition switch ON.
3. Turn ignition switch OFF wait at least 10 seconds.
   Make sure that throttle valve moves during above 10 seconds by confirming the operating sound.

Idle Air Volume Learning

ABS00CL5

DESCRIPTION

Idle Air Volume Learning is an operation to learn the idle air volume that keeps each engine within the specific range. It must be performed under any of the following conditions:

- Each time electric throttle control actuator or ECM is replaced.
- Idle speed or ignition timing is out of specification.

PREPARATION

Before performing Idle Air Volume Learning, make sure that all of the following conditions are satisfied.
Learning will be cancelled if any of the following conditions are missed for even a moment.

- Battery voltage: More than 12.9V (At idle)
- Engine coolant temperature: 70 - 95°C (158 - 203°F)
- Park/neutral position (PNP) switch: ON
- Electric load switch: OFF
  (Air conditioner, headlamp, rear window defogger)
  On vehicles equipped with daytime light systems, if the parking brake is applied before the engine is started the headlamp will not be illuminated.
- Steering wheel: Neutral (Straight-ahead position)
- Vehicle speed: Stopped
- Transmission: Warmed-up

For A/T models with CONSULT-II, drive vehicle until “FLUID TEMP SE” in “DATA MONITOR” mode of “A/T” system indicates less than 0.9V.
For A/T models without CONSULT-II and M/T models, drive vehicle for 10 minutes.

OPERATION PROCEDURE

With CONSULT-II

1. Perform EC-88, "Accelerator Pedal Released Position Learning" .
2. Perform EC-88, "Throttle Valve Closed Position Learning" .
3. Start engine and warm it up to normal operating temperature.
4. Check that all items listed under the topic PREPARATION (previously mentioned) are in good order.
5. Select “IDLE AIR VOL LEARN” in “WORK SUPPORT” mode.

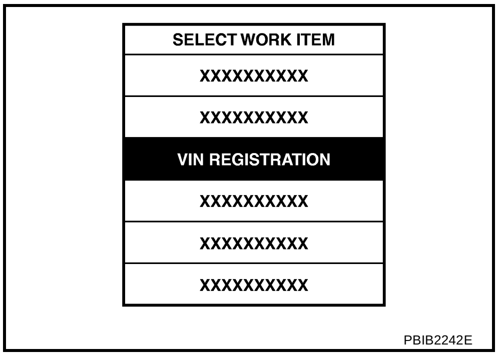

PBIB2242E

6. Touch “START” and wait 20 seconds.

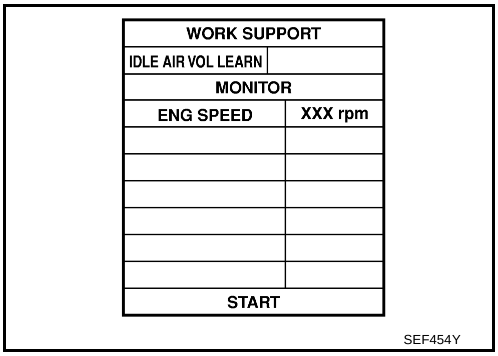

SEF454Y

7. Make sure that “CMPLT” is displayed on CONSULT-II screen. If “CMPLT” is not displayed, Idle Air Volume Learning will not be carried out successfully. In this case, find the cause of the incident by referring to the DIAGNOSTIC PROCEDURE below.
8. Rev up the engine 2 or 3 times and make sure that idle speed and ignition timing are within the specifications.

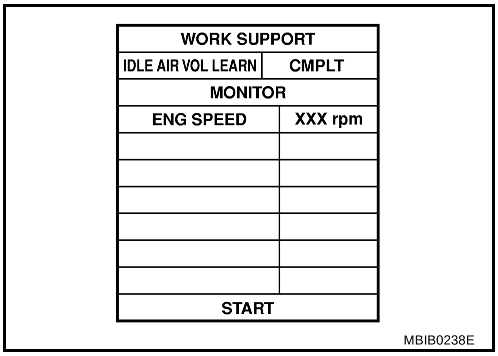

MBIB0238E

ITEM	SPECIFICATION
Idle speed	M/T: 700±50 rpm (in Neutral position) A/T: 700±50 rpm (in P or N position)
Ignition timing	M/T: 15±5° BTDC (in Neutral position) A/T: 15±5° BTDC (in P or N position)

Without CONSULT-II

NOTE:

- **It is better to count the time accurately with a clock.**
- **It is impossible to switch the diagnostic mode when an accelerator pedal position sensor circuit has a malfunction.**

1. Perform EC-88, "Accelerator Pedal Released Position Learning" .
2. Perform EC-88, "Throttle Valve Closed Position Learning" .
3. Start engine and warm it up to normal operating temperature.
4. Check that all items listed under the topic PREPARATION (previously mentioned) are in good order.

5. Turn ignition switch OFF and wait at least 10 seconds.
6. Confirm that accelerator pedal is fully released, turn ignition switch ON and wait 3 seconds.
7. Repeat the following procedure quickly 5 times within 5 seconds.
a. Fully depress the accelerator pedal.
b. Fully release the accelerator pedal.
8. Wait 7 seconds, fully depress the accelerator pedal and keep it for approx. 20 seconds until the MIL stops blinking and turned ON.
9. Fully release the accelerator pedal within 3 seconds after the MIL turned ON.
10. Start engine and let it idle.
11. Wait 20 seconds.

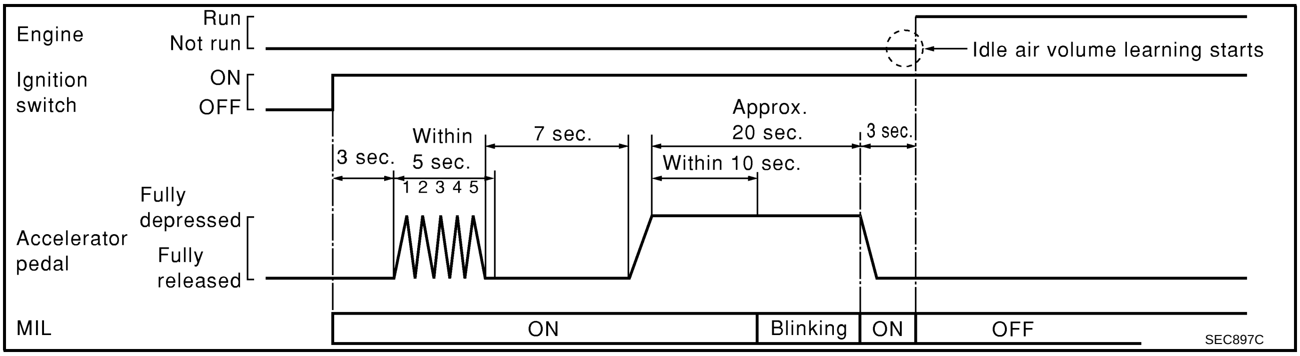

12. Rev up the engine 2 or 3 times and make sure that idle speed and ignition timing are within the specifications.

ITEM	SPECIFICATION
Idle speed	M/T: 700±50 rpm (in Neutral position) A/T: 700±50 rpm (in P or N position)
Ignition timing	M/T: 15±5° BTDC (in Neutral position) A/T: 15±5° BTDC (in P or N position)

13. If idle speed and ignition timing are not within the specification, Idle Air Volume Learning will not be carried out successfully. In this case, find the cause of the incident by referring to the Diagnostic Procedure below.

DIAGNOSTIC PROCEDURE

If idle air volume learning cannot be performed successfully, proceed as follows:

1. **Check that throttle valve is fully closed.**
2. **Check PCV valve operation.**
3. **Check that downstream of throttle valve is free from air leakage.**
4. **When the above three items check out OK, engine component parts and their installation condition are questionable. Check and eliminate the cause of the incident.**
   It is useful to perform **EC-143, "TROUBLE DIAGNOSIS - SPECIFICATION VALUE"** **.**
5. **If any of the following conditions occur after the engine has started, eliminate the cause of the incident and perform Idle Air Volume Learning all over again:**
- **Engine stalls.**
- **Erroneous idle.**

Fuel Pressure Check

ABS00DAQ

FUEL PRESSURE RELEASE

With CONSULT-II

1. Turn ignition switch ON.

2. Perform “FUEL PRESSURE RELEASE” in “WORK SUPPORT” mode with CONSULT-II.
3. Start engine.
4. After engine stalls, crank it 2 or 3 times to release all fuel pressure.
5. Turn ignition switch OFF.

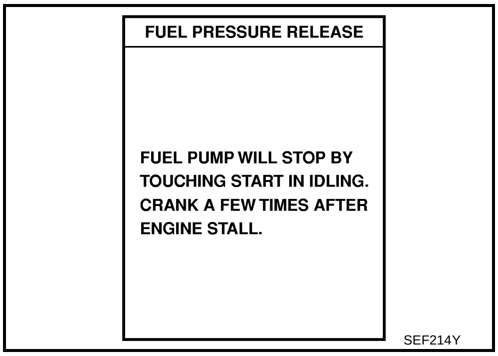

SEF214Y

Without CONSULT-II

1. Remove fuel pump fuse located in fuse box.
2. Start engine.
3. After engine stalls, crank it 2 or 3 times to release all fuel pressure.
4. Turn ignition switch OFF.
5. Reinstall fuel pump fuse after servicing fuel system.

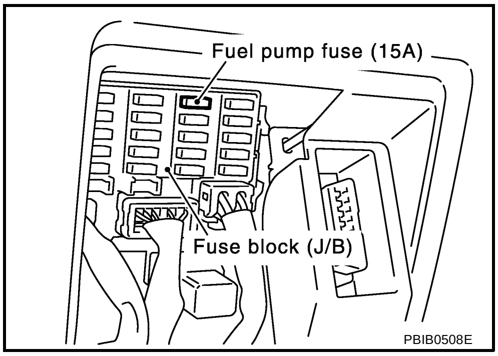

PBIB0508E

FUEL PRESSURE CHECK

CAUTION:
Before disconnecting fuel line, release fuel pressure from fuel line to eliminate danger.

NOTE:
Prepare pans or saucers under the disconnected fuel line because the fuel may spill out. The fuel pressure cannot be completely released because T30 models do not have fuel return system.

Method A

CAUTION:

- **The fuel hose connection method used when taking fuel pressure check must not be used for other purposes.**
- **Be careful not to scratch or put debris around connection area when servicing, so that the quick connector maintains sealability with O-rings inside.**
- **Do not perform fuel pressure check with electrical systems operating (i.e. lights, rear defogger, A/C, etc.) Fuel pressure gauge may indicate false readings due to varying engine load and changes in manifold vacuum.**

1. Release fuel pressure to zero. Refer to EC-90, "FUEL PRESSURE RELEASE" .
2. Prepare fuel hose for fuel pressure check, and connect fuel pressure gauge.
   - Use suitable fuel hose for fuel pressure check (genuine NISSAN fuel hose without quick connector).
   - To avoid unnecessary force or tension to hose, use moderately long fuel hose for fuel pressure check.
   - Do not use the fuel hose for checking fuel pressure with damage or cracks on it.
   - Use Pressure Gauge to check fuel pressure.
3. Remove fuel hose. Refer to EM-16, "INTAKE MANIFOLD" .
   - Do not twist or kink fuel hose because it is plastic hose.
   - Do not remove fuel hose from quick connector.
   - Keep the original fuel hose to be free from intrusion of dust or foreign substances with a suitable cover.

4. Install the fuel pressure gauge as shown in the figure.
   - Wipe off oil or dirt from hose insertion part using cloth moistened with gasoline.
   - Apply proper amount of gasoline between top of the fuel tube and No.1 spool.
   - Insert fuel hose for fuel pressure check until it touches the No.1 spool on fuel tube.
   - Use NISSAN genuine hose clamp (part number: 16439 N4710 or 16439 40U00).
   - When reconnecting fuel line, always use new clamps.
   - When reconnecting fuel hose, check the original fuel hose for damage and abnormality.
   - Use a torque driver to tighten clamps.
   - Install hose clamp to the position within 1 - 2 mm (0.04 - 0.08 in).

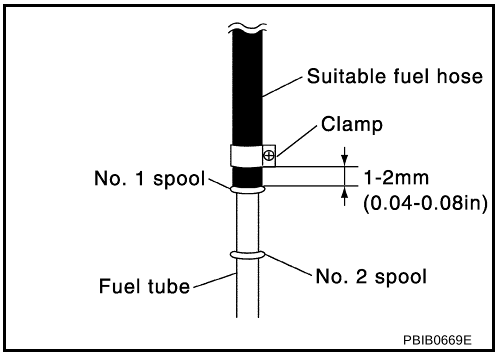

Tightening torque: 1 - 1.5 N·m (0.1 - 0.15 kg-m, 9 - 13 in-lb)

   - Make sure that clamp screw does not contact adjacent parts.

5. After connecting fuel hose for fuel pressure check, pull the hose with a force of approximately 98 N (10 kg, 22 lb) to confirm fuel tube does not come off.

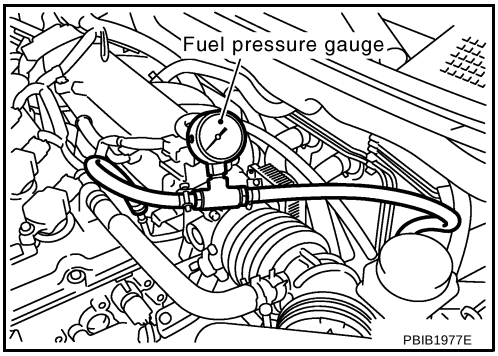

6. Turn ignition switch ON, and check for fuel leakage.
7. Start engine and check for fuel leakage.
8. Read the indication of fuel pressure gauge.
   - Do not perform fuel pressure check with system operating. Fuel pressure gauge may indicate false readings.
   - During fuel pressure check, confirm for fuel leakage from fuel connection every 3 minutes.

At idling: Approximately 350 kPa (3.57 kg/cm^2 , 51 psi)

9. If result is unsatisfactory, go to next step.
10. Check the following.
    - Fuel hoses and fuel tubes for clogging
    - Fuel filter for clogging
    - Fuel pump
    - Fuel pressure regulator for clogging

    If OK, replace fuel pressure regulator.
    If NG, repair or replace.

Method B

CAUTION:

- **Be careful not to scratch or get the fuel hose connection area dirty when servicing, so that the quick connector o-ring maintains sealability.**
- **Use Fuel Pressure Gauge Kit J-44321 and Fuel Pressure Adapter J-44321-6 to check fuel pressure.**

1. Release fuel pressure to zero. Refer to EC-90, "FUEL PRESSURE RELEASE" .
2. Remove fuel hose using Quick Connector Release J-45488. Refer to EM-30, "FUEL INJECTOR AND FUEL TUBE" .
   - Do not twist or kink fuel hose because it is plastic hose.
   - Do not remove fuel hose from quick connector.
   - Keep fuel hose connections clean.

3. Install Fuel Pressure Adapter J-44321-6 and Fuel Pressure Gauge (from kit J-44321) as shown in figure.
   - Do not distort or bend fuel rail tube when installing fuel pressure gauge adapter.
   - When reconnecting fuel hose, check the original fuel hose for damage and abnormality.

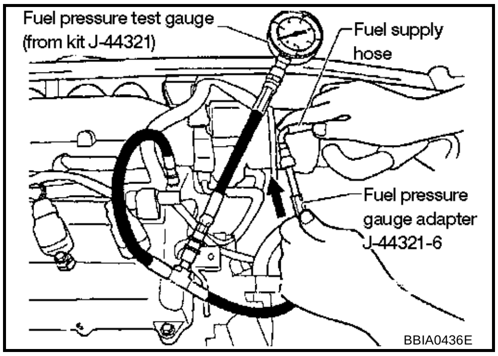

4. Turn ignition switch ON (reactivate fuel pump), and check for fuel leakage.
5. Start engine and check for fuel leakage.
6. Read the indication of fuel pressure gauge.
   - During fuel pressure check, check for fuel leakage from fuel connection every 3 minutes.

At idling: Approximately 350 kPa (3.57 kg/cm^2 , 51 psi)

7. If result is unsatisfactory, go to next step.
8. Check the following.
   - Fuel hoses and fuel tubes for clogging
   - Fuel filter for clogging
   - Fuel pump
   - Fuel pressure regulator for clogging

   If OK, replace fuel pressure regulator.
   If NG, repair or replace.
9. Before disconnecting Fuel Pressure Gauge and Fuel Pressure Adapter J-44321-6, release fuel pressure to zero. Refer to EC-90, "FUEL PRESSURE RELEASE"

TROUBLE DIAGNOSIS

PFP:00004

Trouble Diagnosis Introduction

ABS00CLD

INTRODUCTION

The engine has an ECM to control major systems such as fuel control, ignition control, idle air control system, etc. The ECM accepts input signals from sensors and instantly drives actuators. It is essential that both input and output signals are proper and stable. At the same time, it is important that there are no malfunctions such as vacuum leaks, fouled spark plugs, or other malfunctions with the engine.

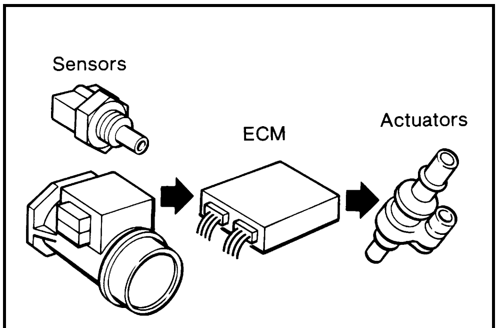

MEF036D

It is much more difficult to diagnose an incident that occurs intermittently rather than continuously. Most intermittent incidents are caused by poor electric connections or improper wiring. In this case, careful checking of suspected circuits may help prevent the replacement of good parts.

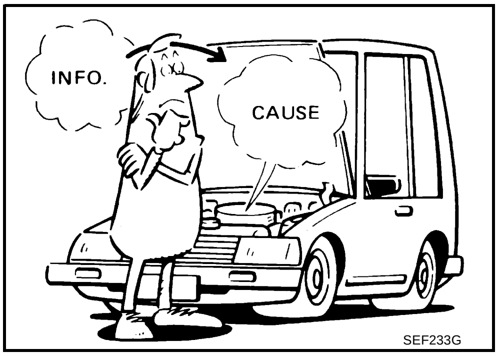

SEF233G

A visual check only may not find the cause of the incidents. A road test with CONSULT-II (or GST) or a circuit tester connected should be performed. Follow the WORK FLOW on EC-95 .

Before undertaking actual checks, take a few minutes to talk with a customer who approaches with a driveability complaint. The customer can supply good information about such incidents, especially intermittent ones. Find out what symptoms are present and under what conditions they occur. A DIAGNOSTIC WORKSHEET like the example on EC-99 should be used.

Start your diagnosis by looking for conventional malfunctions first. This will help troubleshoot driveability malfunctions on an electronically controlled engine vehicle.

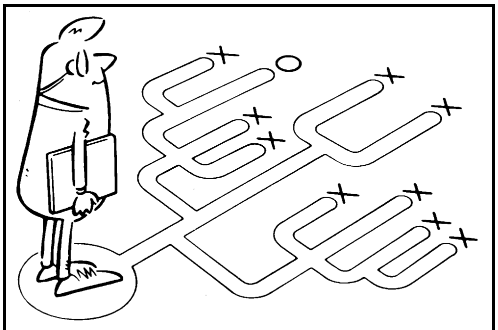

SEF234G

A
EC
C
D
E
F
G
H
I
J
K
L
M

WORK FLOW

Overall Sequence

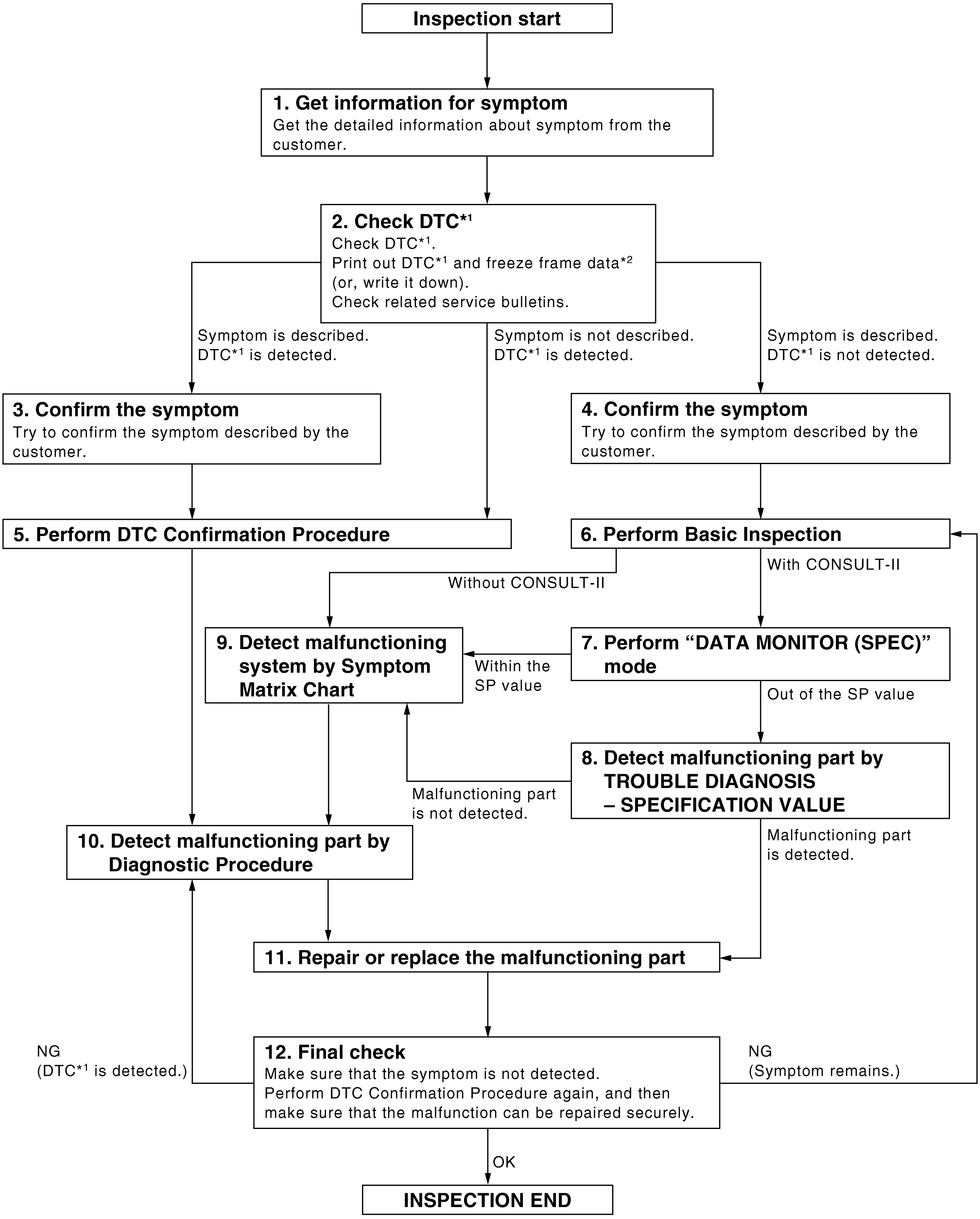

*1: Include 1st trip DTC.
*2: Include 1st trip freeze frame data.

PBIB2267E

Detailed Flow

1. GET INFORMATION FOR SYMPTOM

Get the detailed information from the customer about the symptom (the condition and the environment when the incident/malfunction occurred) using the EC-98, "DIAGNOSTIC WORKSHEET" .

>> GO TO 2.

2. CHECK DTC*[1]

1. Check DTC*[1] .
2. Perform the following procedure if DTC*[1] is displayed.
– Record DTC*[1] and freeze frame data*[2] . (Print them out with CONSULT-II or GST.)
– Erase DTC*[1] . (Refer to EC-59, "HOW TO ERASE EMISSION-RELATED DIAGNOSTIC INFORMATION" .)
– Study the relationship between the cause detected by DTC*[1] and the symptom described by the customer. (Symptom Matrix Chart is useful. Refer to EC-103 .)
3. Check related service bulletins for information.

Is any symptom described and any DTC detected?

Symptom is described, DTC*[1] is displayed>>GO TO 3.
Symptom is described, DTC*[1] is not displayed>>GO TO 4.
Symptom is not described, DTC*[1] is displayed>>GO TO 5.

3. CONFIRM THE SYMPTOM

Try to confirm the symptom described by the customer (except MIL ON).
DIAGNOSIS WORK SHEET is useful to verify the incident.
Connect CONSULT-II to the vehicle in “DATA MONITOR (AUTO TRIG)” mode and check real time diagnosis results.
Verify relation between the symptom and the condition when the symptom is detected.

>> GO TO 5.

4. CONFIRM THE SYMPTOM

Try to confirm the symptom described by the customer.
DIAGNOSIS WORK SHEET is useful to verify the incident.
Connect CONSULT-II to the vehicle in “DATA MONITOR (AUTO TRIG)” mode and check real time diagnosis results.
Verify relation between the symptom and the condition when the symptom is detected.

>> GO TO 6.

5. PERFORM DTC CONFIRMATION PROCEDURE

Perform DTC Confirmation Procedure for the displayed DTC*[1] , and then make sure that DTC*[1] is detected again.
At this time, always connect CONSULT-II to the vehicle, and check diagnostic results in real time on “DATA MONITOR (AUTO TRIG)”.

If two or more DTCs*[1] are detected, refer to EC-100, "DTC Inspection Priority Chart" and determine trouble diagnosis order.

NOTE:

- Freeze frame data*[2] is useful if the DTC*[1] is not detected.
- Perform Overall Function Check if DTC Confirmation Procedure is not included on Service Manual. This simplified check procedure is an effective alternative though DTC*[1] cannot be detected during this check. If the result of Overall Function Check is NG, it is the same as the detection of DTC*[1] by DTC Confirmation Procedure.

Is DTC*[1] detected?

Yes >> GO TO 10.
No >> Check according to EC-153, "TROUBLE DIAGNOSIS FOR INTERMITTENT INCIDENT" .

6. PERFORM BASIC INSPECTION

Perform EC-70, "Basic Inspection" .

With CONSULT-II>>GO TO 7.
Without CONSULT-II>>GO TO 9.

7. PERFORM DATA MONITOR (SPEC) MODE

With CONSULT-II
Make sure that “MAS A/F SE-B1”, “B/FUEL SCHDL”, and “A/F ALPHA-B1” is within the SP value using CONSULT-II “DATA MONITOR (SPEC)” mode. Refer to EC-185, "Diagnostic Procedure" .

Are they within the SP value?

Yes >> GO TO 9.
No >> GO TO 8.

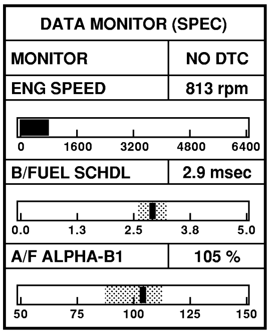

SEF601Z

8. DETECT MALFUNCTIONING PART BY TROUBLE DIAGNOSIS - SPECIFICATION VALUE

Detect malfunctioning part according to EC-143, "TROUBLE DIAGNOSIS - SPECIFICATION VALUE" .

Is malfunctioning part detected?

Yes >> GO TO 11.
No >> GO TO 9.

9. DETECT MALFUNCTIONING SYSTEM BY SYMPTOM MATRIX CHART

Detect malfunctioning system according to EC-103, "Symptom Matrix Chart" based on the confirmed symptom in step 4, and determine the trouble diagnosis order based on possible causes and symptom.

>> GO TO 10.

10. DETECT MALFUNCTIONING PART BY DIAGNOSTIC PROCEDURE

Inspect according to Diagnostic Procedure of the system.

NOTE:

The Diagnostic Procedure in EC section described based on open circuit inspection. A short circuit inspection is also required for the circuit check in the Diagnostic Procedure. For details, refer to Circuit Inspection in GI-26, "How to Perform Efficient Diagnosis for an Electrical Incident" .

Is malfunctioning part detected?

Yes >> GO TO 11.
No >> Monitor input data from related sensors or check voltage of related ECM terminals using CONSULT-II. Refer to EC-137, "CONSULT-II Reference Value in Data Monitor" , EC-115, "ECM Terminals and Reference Value" .

11. REPAIR OR REPLACE THE MALFUNCTIONING PART

1. Repair or replace the malfunctioning part.
2. Reconnect parts or connectors disconnected during Diagnostic Procedure again after repair and replacement.
3. Check DTC. If DTC is displayed, erase it, refer to EC-59, "HOW TO ERASE EMISSION-RELATED DIAGNOSTIC INFORMATION" .

>> GO TO 12.

12. FINAL CHECK

When DTC was detected in step 2, perform DTC Confirmation Procedure or Overall Function Check again, and then make sure that the malfunction have been repaired securely.
When symptom was described from the customer, refer to confirmed symptom in step 3 or 4, and make sure that the symptom is not detected.

OK or NG

NG (DTC*1 is detected)>>GO TO 10.
NG (Symptom remains)>>GO TO 6.
OK >> 1. Before returning the vehicle to the customer, make sure to erase unnecessary DTC*1 in ECM and TCM (Transmission Control Module). (Refer to EC-59, "HOW TO ERASE EMISSION-RELATED DIAGNOSTIC INFORMATION" and AT-40, "HOW TO ERASE DTC" .)
2. If the completion of SRT is needed, drive vehicle under the specific driving pattern. Refer to EC-57, "Driving Pattern" .
3. **INSPECTION END**

*1: Include 1st trip DTC.
*2: Include 1st trip freeze frame data.

DIAGNOSTIC WORKSHEET

Description

There are many operating conditions that lead to the malfunction of engine components. A good grasp of such conditions can make troubleshooting faster and more accurate.
In general, each customer feels differently about an incident. It is important to fully understand the symptoms or conditions for a customer complaint.
Utilize a diagnostic worksheet like the one on the next page in order to organize all the information for troubleshooting.
Some conditions may cause the MIL to come on steady or blink and DTC to be detected. Examples:

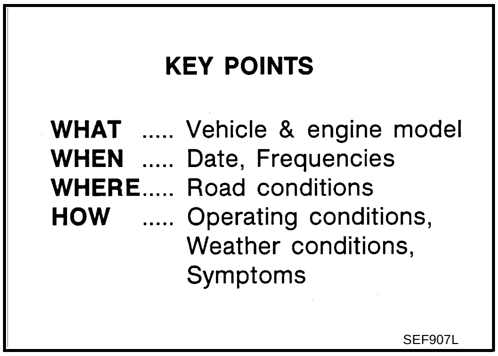

- Vehicle ran out of fuel, which caused the engine to misfire.
- Fuel filler cap was left off or incorrectly screwed on, allowing fuel to evaporate into the atmosphere.

Worksheet Sample

Customer name MR/MS	Model & Year	VIN
Engine #	Trans.	Mileage
Incident Date	Manuf. Date	In Service Date

Fuel and fuel filler cap		☐ Vehicle ran out of fuel causing misfire ☐ Fuel filler cap was left off or incorrectly screwed on.
Symptoms	☐ Startability	☐ Impossible to start ☐ No combustion ☐ Partial combustion ☐ Partial combustion affected by throttle position ☐ Partial combustion NOT affected by throttle position ☐ Possible but hard to start ☐ Others [ ]
	☐ Idling	☐ No fast idle ☐ Unstable ☐ High idle ☐ Low idle ☐ Others [ ]
	☐ Driveability	☐ Stumble ☐ Surge ☐ Knock ☐ Lack of power ☐ Intake backfire ☐ Exhaust backfire ☐ Others [ ]
	☐ Engine stall	☐ At the time of start ☐ While idling ☐ While accelerating ☐ While decelerating ☐ Just after stopping ☐ While loading
Incident occurrence		☐ Just after delivery ☐ Recently ☐ In the morning ☐ At night ☐ In the daytime
Frequency		☐ All the time ☐ Under certain conditions ☐ Sometimes
Weather conditions		☐ Not affected
	Weather	☐ Fine ☐ Raining ☐ Snowing ☐ Others [ ]
	Temperature	☐ Hot ☐ Warm ☐ Cool ☐ Cold ☐ Humid ˚F
Engine conditions		☐ Cold ☐ During warm-up ☐ After warm-up Engine speed 0 2,000 4,000 6,000 8,000 rpm
Road conditions		☐ In town ☐ In suburbs ☐ Highway ☐ Off road (up/down)
Driving conditions		☐ Not affected ☐ At starting ☐ While idling ☐ At racing ☐ While accelerating ☐ While cruising ☐ While decelerating ☐ While turning (RH/LH) Vehicle speed 0 10 20 30 40 50 60 MPH
Malfunction indicator lamp		☐ Turned on ☐ Not turned on

MTBL0017

DTC Inspection Priority Chart

ABS00CLE

If some DTCs are displayed at the same time, perform inspections one by one based on the following priority chart.

NOTE:

If DTC U1000 and/or U1001 is displayed with other DTC, first perform the trouble diagnosis for DTC U1000 and U1001. Refer to **EC-162, "DTC U1000, U1001 CAN COMMUNICATION LINE"** **.**

Priority	Detected items (DTC)
1	● U1000 U1001 CAN communication line ● P0101 P0102 P0103 Mass air flow sensor ● P0112 P0113 P0127 Intake air temperature sensor ● P0117 P0118 P0125 Engine coolant temperature sensor ● P0122 P0123 P0222 P0223 P1225 P1226 P2135 Throttle position sensor ● P0128 Thermostat function ● P0181 P0182 P0183 Fuel tank temperature sensor ● P0327 P0328 Knock sensor ● P0335 Crankshaft position sensor (POS) ● P0340 Camshaft position sensor (PHASE) ● P0460 P0461 P0462 P0463 Fuel level sensor ● P0500 Vehicle speed sensor ● P0605 ECM ● P1229 Sensor power supply ● P1610-P1615 NATS ● P1706 Park/Neutral position (PNP) switch ● P2122 P2123 P2127 P2128 P2138 Accelerator pedal position sensor

Priority	Detected items (DTC)
2	● P0031 P0032 Heated oxygen sensor 1 heater ● P0037 P0038 Heated oxygen sensor 2 heater ● P0132 P0133 P0134 P1143 P1144 Heated oxygen sensor 1 ● P0138 P0139 P1146 P1147 Heated oxygen sensor 2 ● P0441 EVAP control system purge flow monitoring ● P0444 P0445 P1444 EVAP canister purge volume control solenoid valve ● P0447 P1446 EVAP canister vent control valve ● P0451 P0452 P0453 EVAP control system pressure sensor ● P0506 P0507 Idle speed control system ● P0550 power steering pressure sensor ● P0705 P0710 P0720 P0725 P0740 P0744 P0745 P0750 P0755 P1705 P1760 A/T related sensors and solenoid valves ● P1065 ECM power supply ● P1111 Intake valve timing control solenoid valve ● P1122 Electric throttle control function ● P1124 P1126 P1128 Electric throttle control actuator ● P1720 Vehicle speed sensor ● P1800 VIAS control solenoid valve ● P1805 Brake switch
3	● P0011 Intake valve timing control ● P0171 P0172 Fuel injection system function ● P0300 - P0304 Misfire ● P0420 Three way catalyst function ● P0442 P0456 EVAP control system (SMALL LEAK, VERY SMALL LEAK) ● P0455 EVAP control system (GROSS LEAK) ● P0731-P0734 A/T function ● P1121 Electric throttle control actuator ● P1148 Closed loop control ● P1211 TCS control unit ● P1212 TCS communication line ● P1217 Engine over temperature (OVERHEAT) ● P1564 ASCD steering switch ● P1572 ASCD brake switch ● P1574 ASCD vehicle speed sensor

Fail-Safe Chart

ABS00CLF

When the DTC listed below is detected, the ECM enters fail-safe mode and the MIL lights up.

<table>
<tr><th>DTC No.</th><th>Detected items</th><th colspan="2">Engine operating condition in fail-safe mode</th></tr>
<tr><td>P0102
P0103</td><td>Mass air flow sensor circuit</td><td colspan="2">Engine speed will not rise more than 2,400 rpm due to the fuel cut.</td></tr>
<tr><td rowspan="6">P0117
P0118</td><td rowspan="6">Engine coolant temperature sensor circuit</td><td colspan="2">Engine coolant temperature will be determined by ECM based on the time after turning ignition switch ON or START.
CONSULT-II displays the engine coolant temperature decided by ECM.</td></tr>
<tr><td>Condition</td><td>Engine coolant temperature decided (CONSULT-II display)</td></tr>
<tr><td>Just as ignition switch is turned ON or START</td><td>40°C (104°F)</td></tr>
<tr><td>More than approx. 4 minutes after ignition ON or START</td><td>80°C (176°F)</td></tr>
<tr><td>Except as shown above</td><td>40 - 80°C (104 - 176°F)
(Depends on the time)</td></tr>
<tr><td colspan="2">When the fail-safe system for engine coolant temperature sensor is activated, the cooling fan operates while engine is running.</td></tr>
<tr><td>P0122
P0123
P0222
P0223
P2135</td><td>Throttle position sensor</td><td colspan="2">The ECM controls the electric throttle control actuator in regulating the throttle opening in order for the idle position to be within +10 degrees.
The ECM regulates the opening speed of the throttle valve to be slower than the normal condition.
So, the acceleration will be poor.</td></tr>
<tr><td rowspan="3">P1121</td><td rowspan="3">Electric throttle control actuator</td><td colspan="2">(When electric throttle control actuator does not function properly due to the return spring malfunction:)
ECM controls the electric throttle actuator by regulating the throttle opening around the idle position. The engine speed will not rise more than 2,000 rpm.</td></tr>
<tr><td colspan="2">(When throttle valve opening angle in fail-safe mode is not in specified range:)
ECM controls the electric throttle control actuator by regulating the throttle opening to 20 degrees or less.</td></tr>
<tr><td colspan="2">(When ECM detects the throttle valve is stuck open:)
While the vehicle is driving, it slows down gradually by fuel cut. After the vehicle stops, the engine stalls.
The engine can restart in N or P (A/T), Neutral (M/T) position, and engine speed will not exceed 1,000 rpm or more.</td></tr>
<tr><td>P1122</td><td>Electric throttle control function</td><td colspan="2">ECM stops the electric throttle control actuator control, throttle valve is maintained at a fixed opening (approx. 5 degrees) by the return spring.</td></tr>
<tr><td>P1124
P1126</td><td>Throttle control relay</td><td colspan="2">ECM stops the electric throttle control actuator control, throttle valve is maintained at a fixed opening (approx. 5 degrees) by the return spring.</td></tr>
<tr><td>P1128</td><td>Throttle control motor</td><td colspan="2">ECM stops the electric throttle control actuator control, throttle valve is maintained at a fixed opening (approx. 5 degrees) by the return spring.</td></tr>
<tr><td>P1229</td><td>Sensor power supply</td><td colspan="2">ECM stops the electric throttle control actuator control, throttle valve is maintained at a fixed opening (approx. 5 degrees) by the return spring.</td></tr>
<tr><td>P2122
P2123
P2127
P2128
P2138</td><td>Accelerator pedal position sensor</td><td colspan="2">The ECM controls the electric throttle control actuator in regulating the throttle opening in order for the idle position to be within +10 degrees.
The ECM regulates the opening speed of the throttle valve to be slower than the normal condition.
So, the acceleration will be poor.</td></tr>
</table>

- When there is an open circuit on MIL circuit, the ECM cannot warn the driver by lighting MIL up when there is malfunction on engine control system.
  Therefore, when electrical controlled throttle and part of ECM related diagnoses are continuously detected as NG for 5 trips, ECM warns the driver that engine control system malfunctions and MIL circuit is open by means of operating fail-safe function.
  The fail-safe function also operates when above diagnoses except MIL circuit are detected, and demands the driver to repair the malfunction.

Engine operating condition in fail-safe mode	Engine speed will not rise more than 2,500 rpm due to the fuel cut

Symptom Matrix Chart

ABS00CLH

SYSTEM — BASIC ENGINE CONTROL SYSTEM

		HARD/NO START/RESTART (EXCP. HA)	ENGINE STALL	HESITATION/SURGING/FLAT SPOT	SPARK KNOCK/DETONATION	LACK OF POWER/POOR ACCELERATION	HIGH IDLE/LOW IDLE	ROUGH IDLE/HUNTING	IDLING VIBRATION	SLOW/NO RETURN TO IDLE	OVERHEATS/WATER TEMPERATURE HIGH	EXCESSIVE FUEL CONSUMPTION	EXCESSIVE OIL CONSUMPTION	BATTERY DEAD (UNDER CHARGE)	Reference page
		SYMPTOM													
Warranty symptom code		AA	AB	AC	AD	AE	AF	AG	AH	AJ	AK	AL	AM	HA	
Fuel	Fuel pump circuit	1	1	2	3	2		2	2			3		2	EC-613
	Fuel pressure regulator system	3	3	4	4	4	4	4	4	4		4			EC-90
	Injector circuit	1	1	2	3	2		2	2			2			EC-607
	Evaporative emission system	3	3	4	4	4	4	4	4	4		4			EC-30
Air	Positive crankcase ventilation system	3	3	4	4	4	4	4	4	4		4	1		EC-44
	Incorrect idle speed adjustment	3	3				1	1	1	1		1			EC-70
	Electric throttle control actuator	1	1	2	3	3	2	2	2	2		2		2	EC-427, EC-429, EC-437, EC-443
Ignition	Incorrect ignition timing adjustment	3	3	1	1	1		1	1			1			EC-70
	Ignition circuit	1	1	2	2	2		2	2			2			EC-586
Power supply and ground circuit		2	2	3	3	3		3	3		2	3			EC-154
Mass air flow sensor circuit		1	1	2	2	2		2	2			2			EC-181, EC-190
Engine coolant temperature sensor circuit		1	1	2	2	2	3	2	2	3	1	2			EC-204, EC-218
Throttle position sensor circuit			1	2		2	2	2	2	2		2			EC-210, EC-290, EC-495, EC-497, EC-570
Accelerator pedal position sensor circuit				3	2	1	2			2					EC-499, EC-555, EC-562, EC-578
Heated oxygen sensor 1 circuit			1	2	3	2		2	2			2			EC-226, EC-233, EC-243, EC-448, EC-454
Knock sensor circuit				2	2							3			EC-305
Crankshaft position sensor (POS) circuit		2	2												EC-310
Camshaft position sensor (PHASE) circuit		2	2												EC-318

	SYMPTOM													Reference page
	HARD/NO START/RESTART (EXCP. HA)	ENGINE STALL	HESITATION/SURGING/FLAT SPOT	SPARK KNOCK/DETONATION	LACK OF POWER/POOR ACCELERATION	HIGH IDLE/LOW IDLE	ROUGH IDLE/HUNTING	IDLING VIBRATION	SLOW/NO RETURN TO IDLE	OVERHEATS/WATER TEMPERATURE HIGH	EXCESSIVE FUEL CONSUMPTION	EXCESSIVE OIL CONSUMPTION	BATTERY DEAD (UNDER CHARGE)	
Warranty symptom code	AA	AB	AC	AD	AE	AF	AG	AH	AJ	AK	AL	AM	HA	
Vehicle speed signal circuit		2	3		3						3			EC-405
Power steering pressure sensor circuit						3	3	3	3					EC-411
ECM	2	2	3	3	3	3	3	3	3	3	3			EC-416, EC-419
Intake valve timing control solenoid valve circuit	3	3	2		1	3	2	2	3		3			EC-423
VIAS control solenoid valve circuit					1									EC-545, EC-597
Park/neutral position (PNP) switch circuit			3		3	3	3	3	3		3			EC-540
Refrigerant pressure sensor circuit		2				3	3	3	3		4			EC-619
Electrical load signal circuit						3	3	3	3					EC-625
Air conditioner circuit	2	2	3	3	3	3	3	3	3		3		2	MTC-28or ATC-32
VDC/TCS/ABS control unit*[1]			4											BRC-48
ABS actuator and electric unit (control unit)*[2]			4											BRC-9

1 - 6: The numbers refer to the order of inspection.

(continued on next page)

*1: With VDC models.

*2: Without VDC models.

SYSTEM — ENGINE MECHANICAL & OTHER

		SYMPTOM													Reference page
		HARD/NO START/RESTART (EXCP. HA)	ENGINE STALL	HESITATION/SURGING/FLAT SPOT	SPARK KNOCK/DETONATION	LACK OF POWER/POOR ACCELERATION	HIGH IDLE/LOW IDLE	ROUGH IDLE/HUNTING	IDLING VIBRATION	SLOW/NO RETURN TO IDLE	OVERHEATS/WATER TEMPERATURE HIGH	EXCESSIVE FUEL CONSUMPTION	EXCESSIVE OIL CONSUMPTION	BATTERY DEAD (UNDER CHARGE)	
Warranty symptom code		AA	AB	AC	AD	AE	AF	AG	AH	AJ	AK	AL	AM	HA	
Fuel	Fuel tank	5													FL-11
	Fuel piping			5	5	5		5	5			5			EM-30
	Vapor lock		5												—
	Valve deposit														—
	Poor fuel (Heavy weight gaso-line, Low octane)	5		5	5	5		5	5			5			—
Air	Air duct														EM-14
	Air cleaner														EM-14
	Air leakage from air duct (Mass air flow sensor —electric throttle control actuator)		5	5		5		5	5			5			EM-14
	Electric throttle control actuator	5			5		5			5					EM-16
	Air leakage from intake manifold/ Collector/Gasket														EM-16
Cranking	Battery	1	1	1		1		1	1			1		1	SC-4
	Generator circuit														SC-20
	Starter circuit	3													SC-9
	Signal plate/Flywheel/Drive plate	6													EM-81
	Park/neutral position (PNP) switch	4													MT-13 or AT-98
Engine	Cylinder head	5	5	5	5	5		5	5			5			EM-62
	Cylinder head gasket										4		3		
	Cylinder block														
	Piston												4		
	Piston ring	6	6	6	6	6		6	6			6			EM-81
	Connecting rod														
	Bearing														
	Crankshaft														

		SYMPTOM													Reference page
		HARD/NO START/RESTART (EXCP. HA)	ENGINE STALL	HESITATION/SURGING/FLAT SPOT	SPARK KNOCK/DETONATION	LACK OF POWER/POOR ACCELERATION	HIGH IDLE/LOW IDLE	ROUGH IDLE/HUNTING	IDLING VIBRATION	SLOW/NO RETURN TO IDLE	OVERHEATS/WATER TEMPERATURE HIGH	EXCESSIVE FUEL CONSUMPTION	EXCESSIVE OIL CONSUMPTION	BATTERY DEAD (UNDER CHARGE)	
Warranty symptom code		AA	AB	AC	AD	AE	AF	AG	AH	AJ	AK	AL	AM	HA	
Valve mechanism	Timing chain	5	5	5	5	5		5	5			5			EM-49
	Camshaft														EM-37
	Intake valve timing control														EM-49
	Intake valve												3		EM-62
	Exhaust valve														
Exhaust	Exhaust manifold/Tube/Muffler/ Gasket	5	5	5	5	5		5	5			5			EM-20, EX-2
	Three way catalyst														
Lubrication	Oil pan/Oil strainer/Oil pump/Oil filter/Oil gallery	5	5	5	5	5		5	5			5	2		EM-22, LU-9 , LU-12 , LU-4
	Oil level (Low)/Filthy oil														LU-6
Cooling	Radiator/Hose/Radiator filler cap	5	5	5	5	5		5	5		2	5			CO-11
	Thermostat									5					CO-22
	Water pump														CO-20
	Water gallery														CO-6
	Cooling fan									5					CO-18
	Coolant level (low)/Contaminated coolant														CO-8
NVIS (NISSAN Vehicle Immobilizer System — NATS)		1	1												BL-97

1 - 6: The numbers refer to the order of inspection.

Engine Control Component Parts Location

ABS00CLI

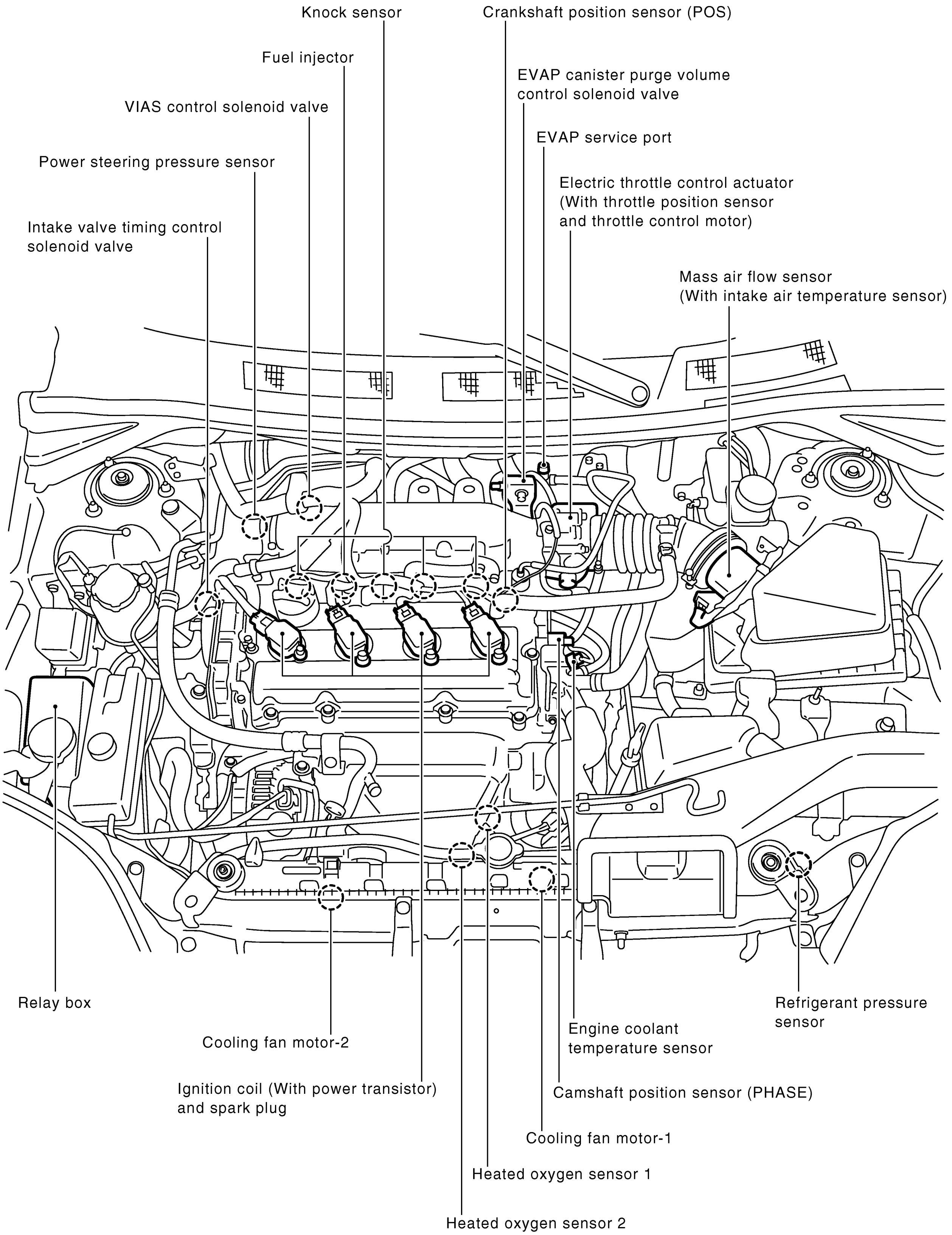

PBIB2333E

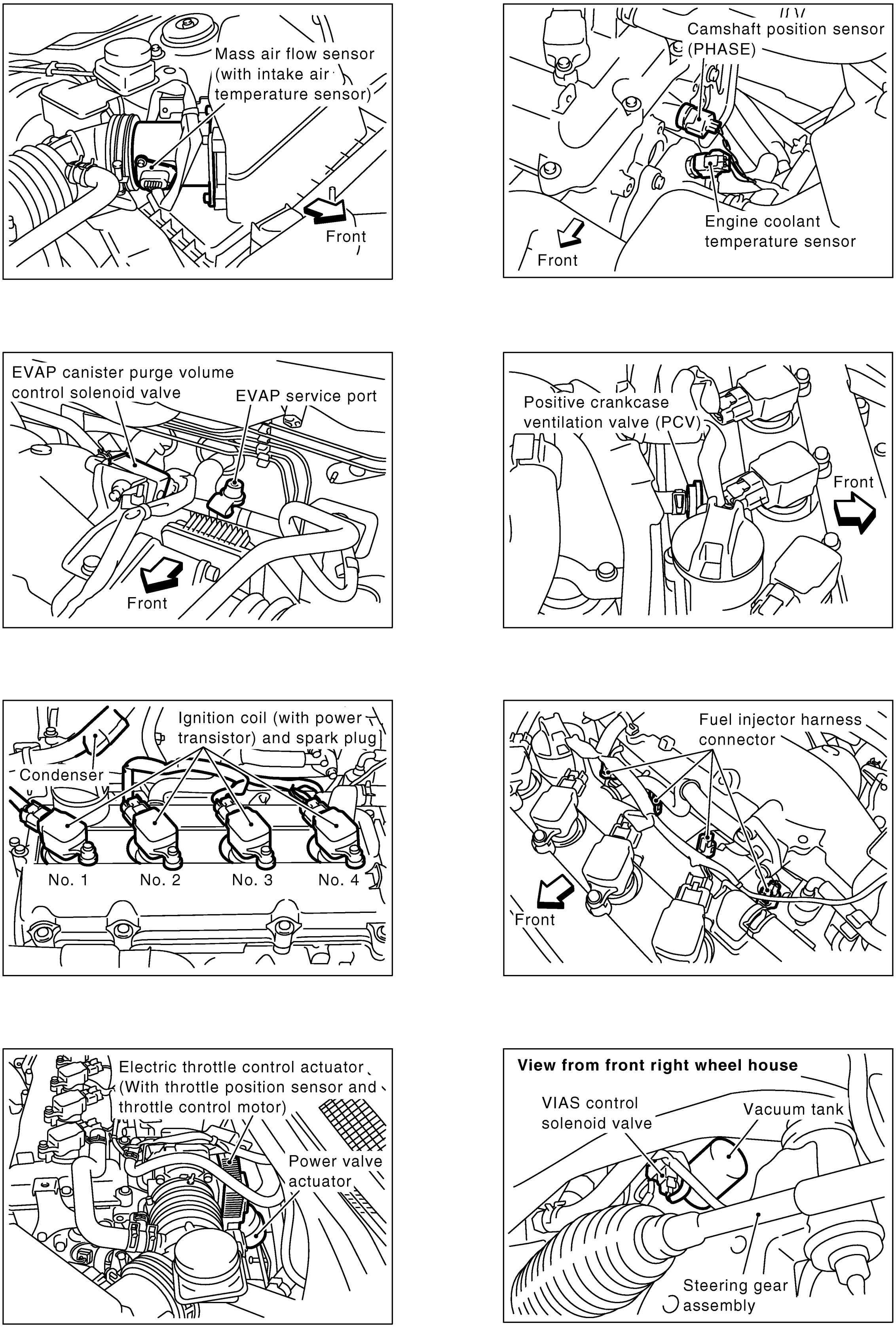
Mass air flow sensor
(with intake air
temperature sensor)
Front
Camshaft position sensor
(PHASE)
Engine coolant
temperature sensor
Front
EVAP canister purge volume
control solenoid valve
EVAP service port
Front
Positive crankcase
ventilation valve (PCV)
Front
Ignition coil (with power
transistor) and spark plug
Condenser
No. 1
No. 2
No. 3
No. 4
Fuel injector harness
connector
Front
Electric throttle control actuator
(With throttle position sensor and
throttle control motor)
Power valve
actuator
View from front right wheel house
VIAS control
solenoid valve
Vacuum tank
Steering gear
assembly

PBIB2346E

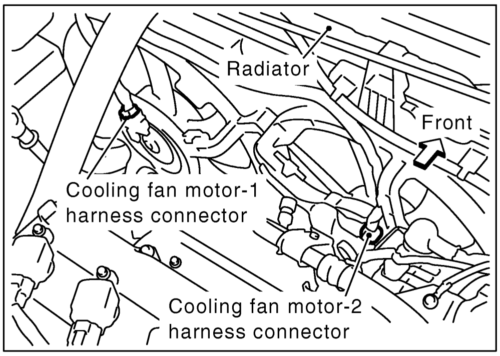
Radiator
Front
Cooling fan motor-1
harness connector
Cooling fan motor-2
harness connector

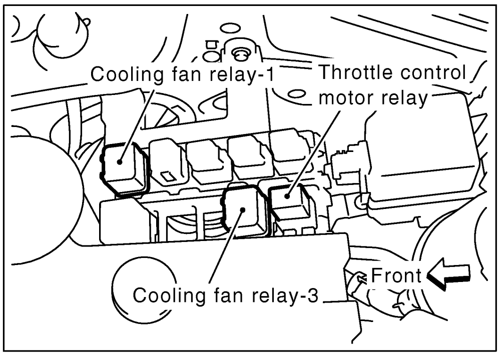
Cooling fan relay-1
Throttle control
motor relay
Front
Cooling fan relay-3

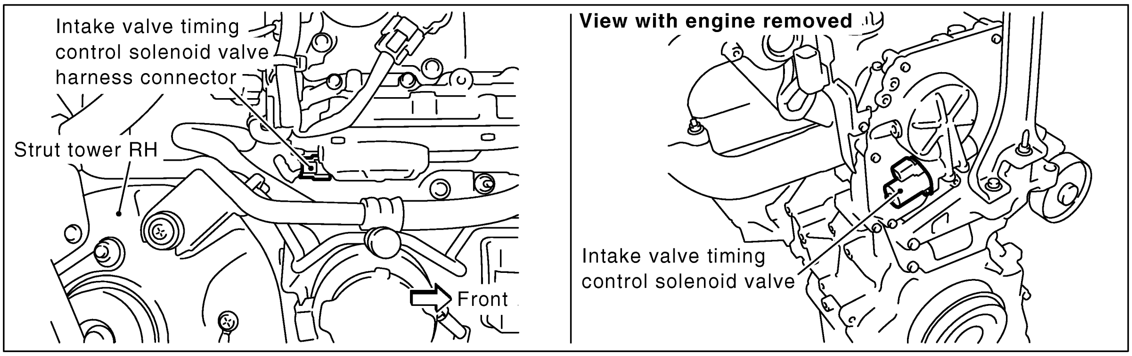
Intake valve timing
control solenoid valve
harness connector
Strut tower RH
Front
View with engine removed
Intake valve timing
control solenoid valve

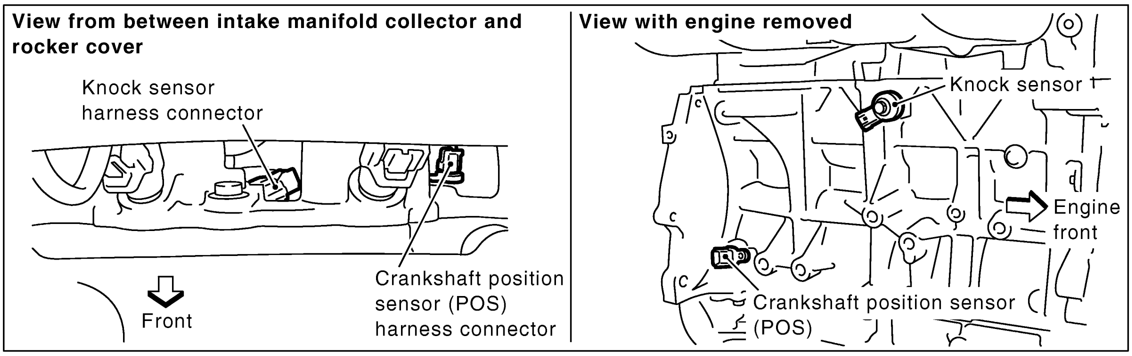
View from between intake manifold collector and
rocker cover
Knock sensor
harness connector
Front
Crankshaft position
sensor (POS)
harness connector
View with engine removed
Knock sensor
Engine
front
Crankshaft position sensor
(POS)

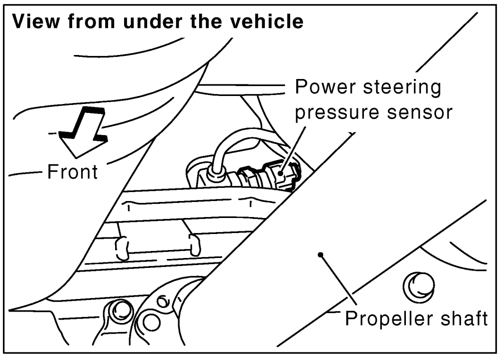
View from under the vehicle
Power steering
pressure sensor
Front
Propeller shaft

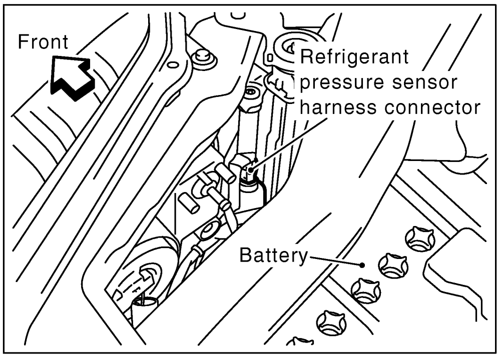
Front
Refrigerant
pressure sensor
harness connector
Battery

PBIB2347E

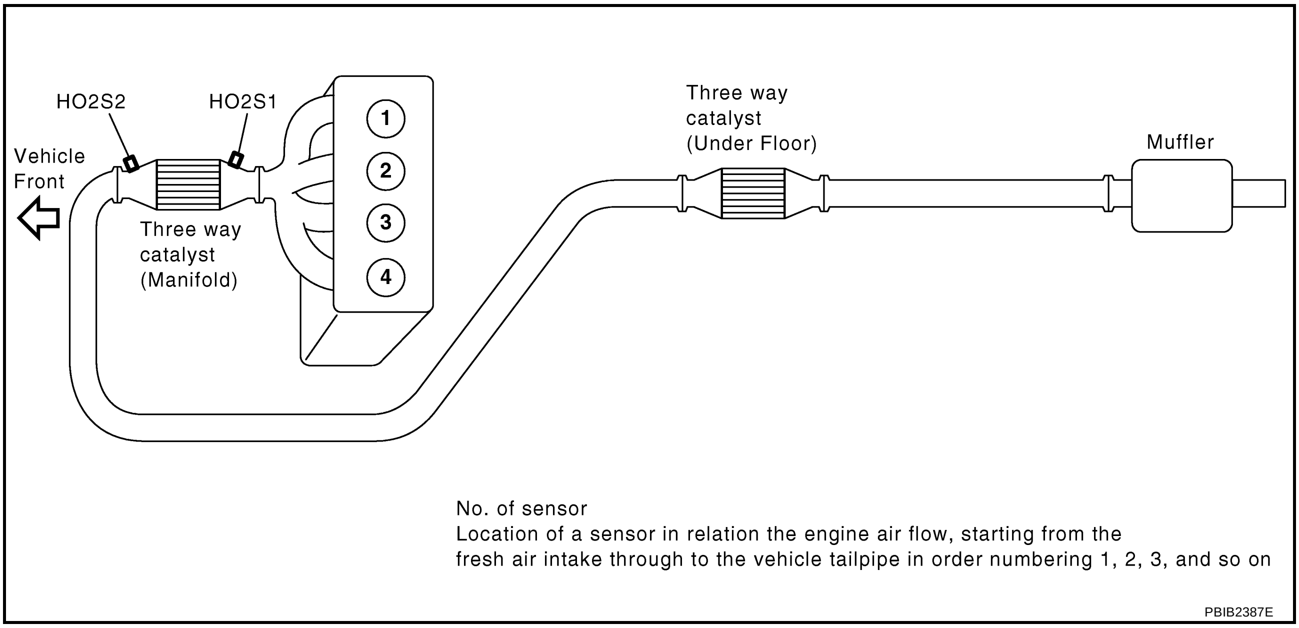
HO2S2
HO2S1
Vehicle
Front
Three way
catalyst
(Manifold)
1
2
3
4
Three way
catalyst
(Under Floor)
Muffler
No. of sensor
Location of a sensor in relation the engine air flow, starting from the
fresh air intake through to the vehicle tailpipe in order numbering 1, 2, 3, and so on
PBIB2387E

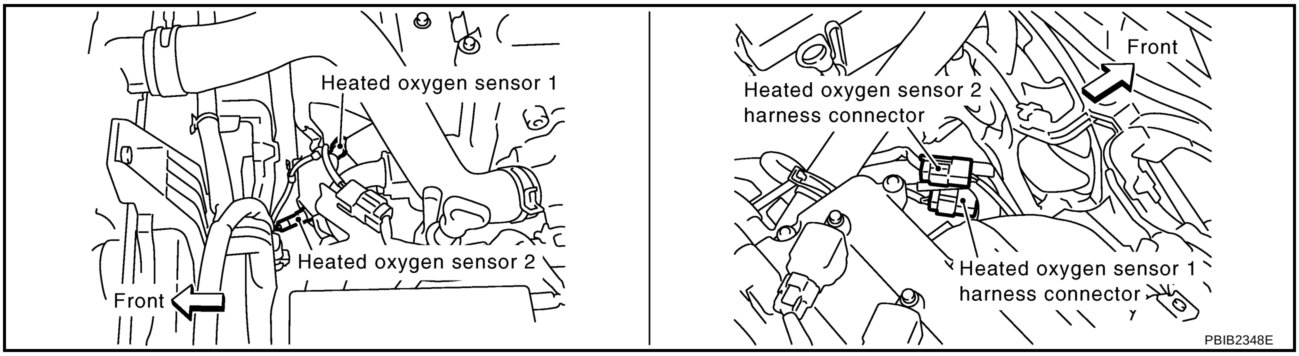
Heated oxygen sensor 1
Heated oxygen sensor 2
Front
Front
Heated oxygen sensor 2
harness connector
Heated oxygen sensor 1
harness connector
PBIB2348E

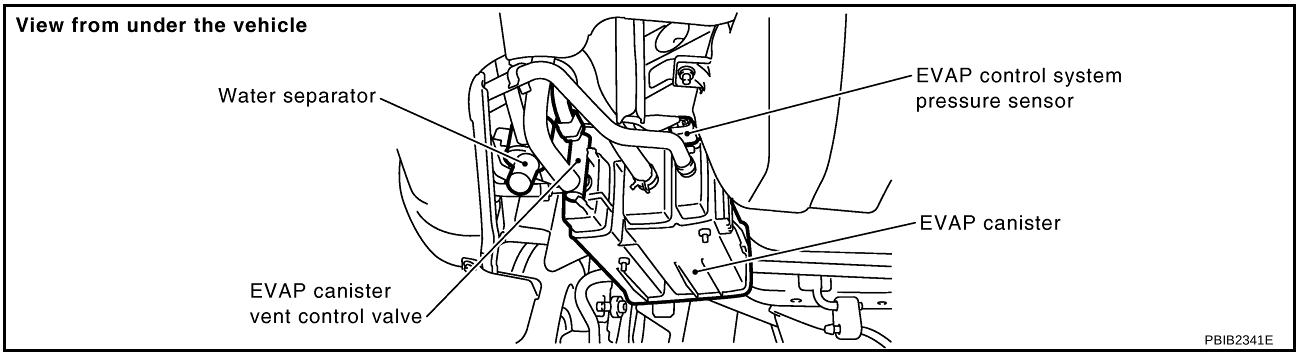
View from under the vehicle
Water separator
EVAP control system
pressure sensor
EVAP canister
EVAP canister
vent control valve
PBIB2341E

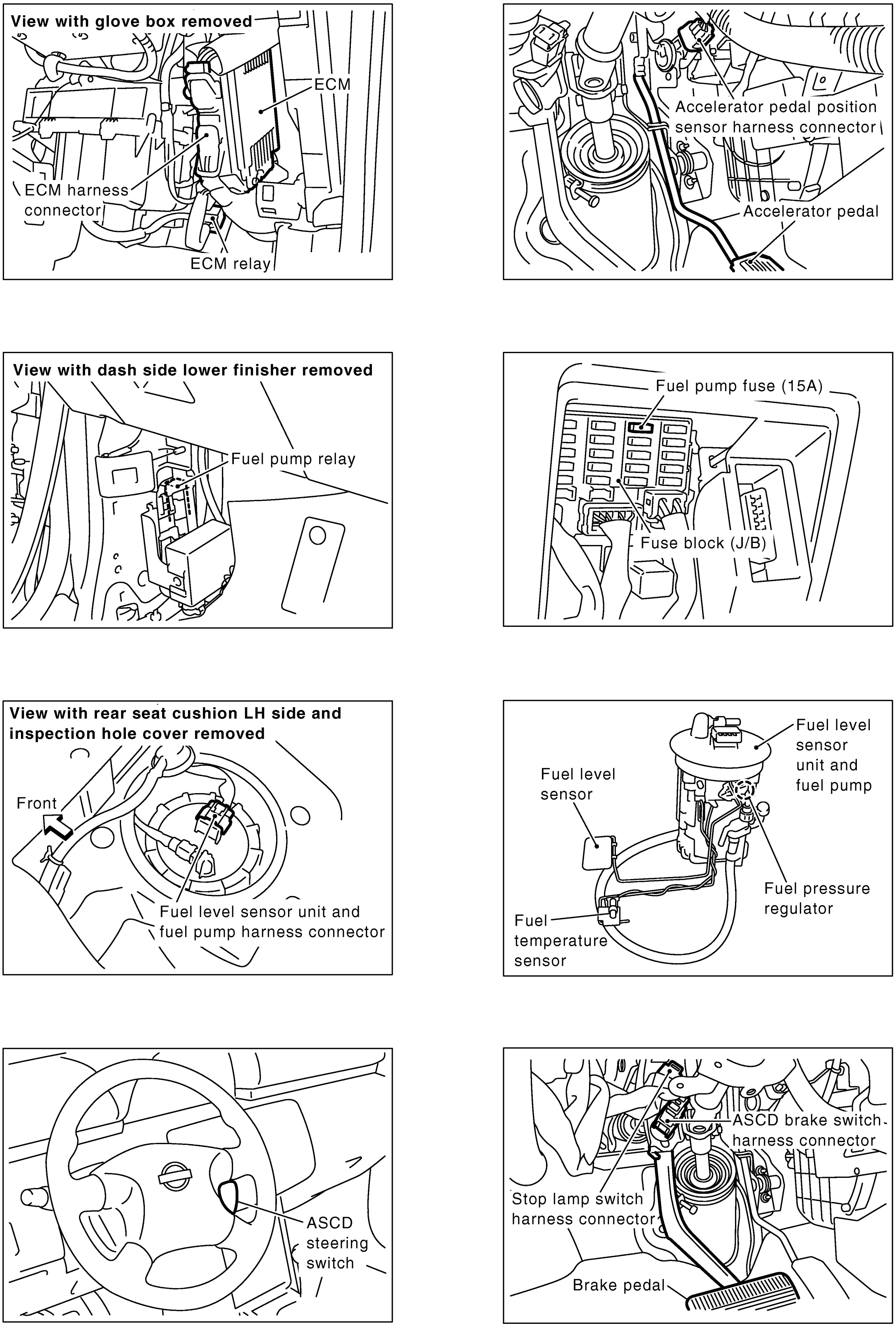
View with glove box removed
ECM
ECM harness connector
ECM relay
Accelerator pedal position sensor harness connector
Accelerator pedal
View with dash side lower finisher removed
Fuel pump relay
Fuel pump fuse (15A)
Fuse block (J/B)
View with rear seat cushion LH side and inspection hole cover removed
Front
Fuel level sensor unit and fuel pump harness connector
Fuel level sensor
Fuel level sensor unit and fuel pump
Fuel pressure regulator
Fuel temperature sensor
ASCD steering switch
ASCD brake switch harness connector
Stop lamp switch harness connector
Brake pedal

PBIB2349E

Vacuum Hose Drawing

ABS00CKU

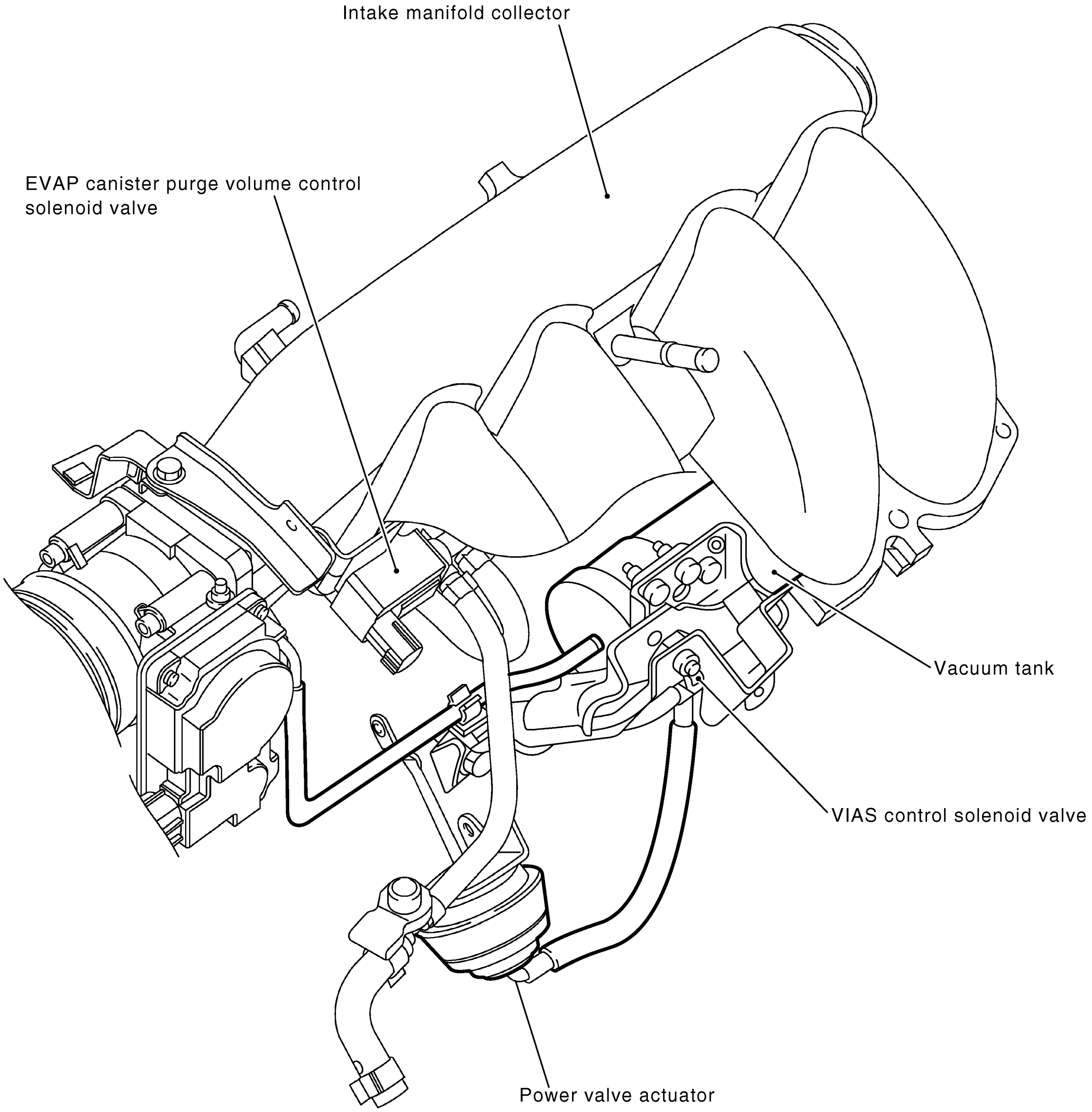

NOTE: Do not use soapy water or any type of solvent while installing vacuum hose or purge hoses.

PBIB2364E

Refer to EC-21, "System Diagram" for Vacuum Control System.

Circuit Diagram

ABS00CLJ

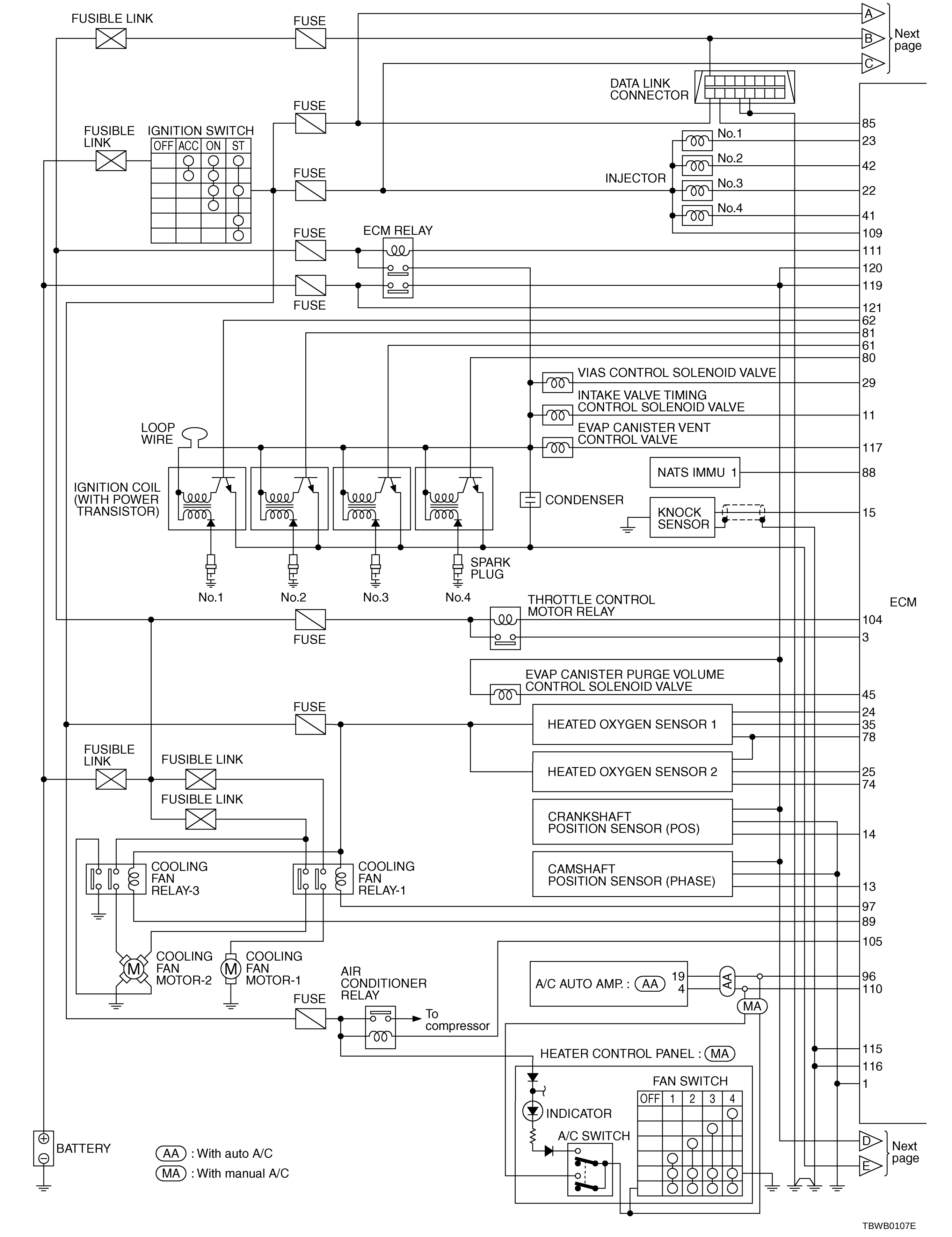

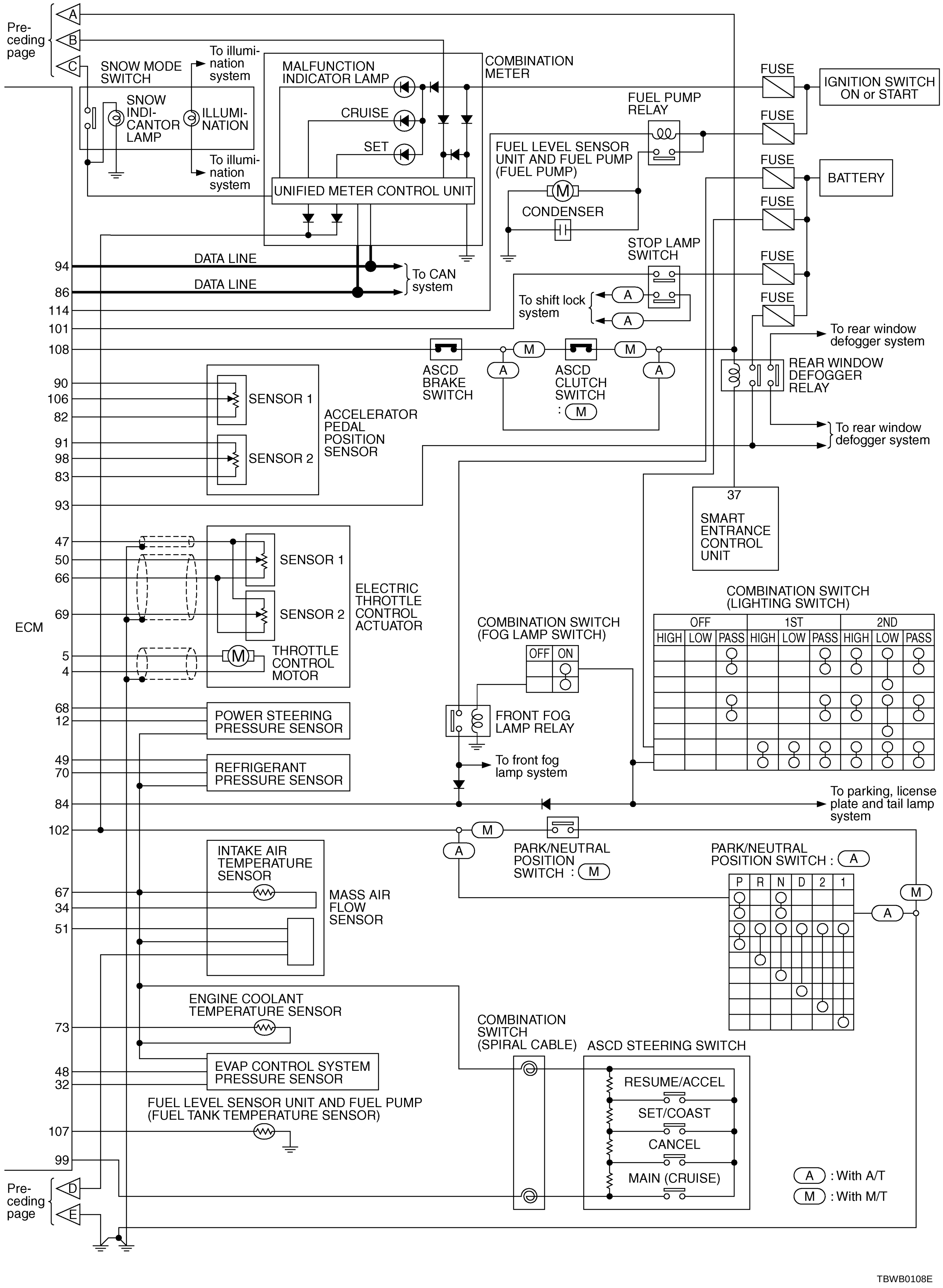
Preceding page
A
B
C
SNOW MODE SWITCH
SNOW INDICANTOR LAMP
ILLUMINATION
To illumination system
To illumination system
MALFUNCTION INDICATOR LAMP
CRUISE
SET
UNIFIED METER CONTROL UNIT
COMBINATION METER
FUSE
IGNITION SWITCH ON or START
FUEL PUMP RELAY
FUSE
FUEL LEVEL SENSOR UNIT AND FUEL PUMP (FUEL PUMP)
CONDENSER
FUSE
BATTERY
FUSE
STOP LAMP SWITCH
FUSE
FUSE
94
DATA LINE
86
DATA LINE
To CAN system
114
101
To shift lock system
108
ASCD BRAKE SWITCH
ASCD CLUTCH SWITCH : M
To rear window defogger system
REAR WINDOW DEFOGGER RELAY
To rear window defogger system
90
106
82
SENSOR 1
91
98
83
SENSOR 2
ACCELERATOR PEDAL POSITION SENSOR
93
37
SMART ENTRANCE CONTROL UNIT
47
50
66
69
SENSOR 1
SENSOR 2
ELECTRIC THROTTLE CONTROL ACTUATOR
ECM
5
4
THROTTLE CONTROL MOTOR
COMBINATION SWITCH (LIGHTING SWITCH)
OFF 1ST 2ND
HIGH LOW PASS HIGH LOW PASS HIGH LOW PASS
COMBINATION SWITCH (FOG LAMP SWITCH)
OFF ON
FRONT FOG LAMP RELAY
68
12
POWER STEERING PRESSURE SENSOR
49
70
REFRIGERANT PRESSURE SENSOR
To front fog lamp system
84
To parking, license plate and tail lamp system
102
PARK/NEUTRAL POSITION SWITCH : M
PARK/NEUTRAL POSITION SWITCH : A
P R N D 2 1
INTAKE AIR TEMPERATURE SENSOR
67
34
51
MASS AIR FLOW SENSOR
ENGINE COOLANT TEMPERATURE SENSOR
73
COMBINATION SWITCH (SPIRAL CABLE)
ASCD STEERING SWITCH
48
32
EVAP CONTROL SYSTEM PRESSURE SENSOR
RESUME/ACCEL
SET/COAST
FUEL LEVEL SENSOR UNIT AND FUEL PUMP (FUEL TANK TEMPERATURE SENSOR)
107
CANCEL
99
MAIN (CRUISE)
Preceding page
D
E
A : With A/T
M : With M/T
TBWB0108E

ECM Harness Connector Terminal Layout

ABS00CLK

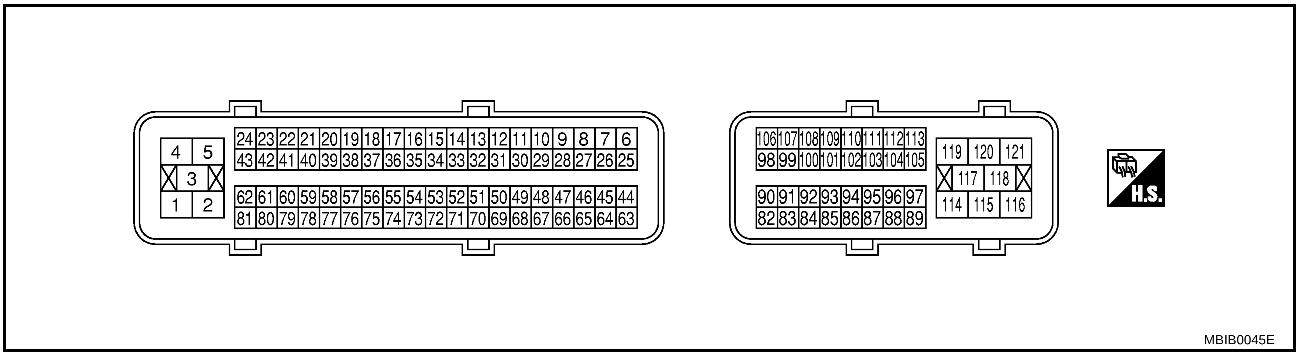

MBIB0045E

ECM Terminals and Reference Value

ABS00CLL

PREPARATION

1. ECM is located in the right side of the cowl top (behind the strut tower).

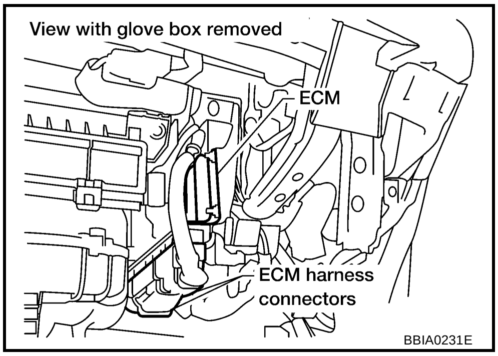

BBIA0231E

2. Remove ECM harness protector.
3. When disconnecting ECM harness connector, loosen it with levers as far as they will go as shown at right.
4. Connect a break-out box (SST) and Y-cable adapter (SST) between the ECM and ECM harness connector.
   - Use extreme care not to touch 2 pins at 1 time.
   - Data is for comparison and may not be exact.

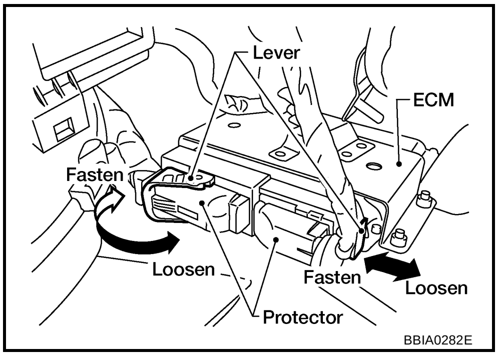

BBIA0282E

ECM INSPECTION TABLE

Specification data are reference values and are measured between each terminal and ground.
Pulse signal is measured by CONSULT-II.

CAUTION:

Do not use ECM ground terminals when measuring input/output voltage. Doing so may result in damage to the ECM's transistor. Use a ground other than ECM terminals, such as the ground.

TERMINAL NO.	WIRE COLOR	ITEM	CONDITION	DATA (DC Voltage)
1	B	ECM ground	**[Engine is running]** ● Idle speed	Body ground
3	W/B	Throttle control motor power supply	**[Ignition switch: ON]**	BATTERY VOLTAGE (11 - 14V)

TERMINAL NO.	WIRE COLOR	ITEM	CONDITION	DATA (DC Voltage)
4	G	Throttle control motor (Close)	**[Ignition switch: ON]** ● Engine stopped ● Shift lever: D (A/T), 1ST (M/T) ● Accelerator pedal: Fully released	0 - 14V★ 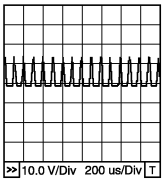 PBIB0534E
5	R	Throttle control motor (Open)	**[Ignition switch: ON]** ● Engine stopped ● Shift lever: D (A/T), 1ST (M/T) ● Accelerator pedal: Fully depressed	0 - 14V★ 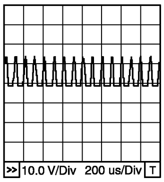 PBIB0533E
11	Y	Intake valve timing control solenoid valve	**[Engine is running]** ● **Warm-up condition** ● Idle speed	BATTERY VOLTAGE (11 - 14V)
			[Engine is running] ● **Warm-up condition** ● Engine speed 2,500 rpm	7 - 10V★ 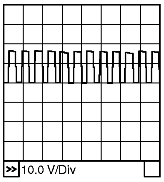
12	P	Power steering pressure sensor	**[Engine is running]** ● Steering wheel: Being turned	0.5 - 4.0V
			[Engine is running] ● Steering wheel: Not being turned	0.4 - 0.8V
13	L/W	Camshaft position sensor (PHASE)	**[Engine is running]** ● **Warm-up condition** ● Idle speed **NOTE:** The pulse cycle changes depending on rpm at idle.	1.0 - 4.0V★ 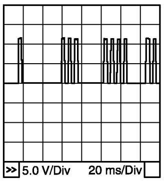 PBIB0525E
			[Engine is running] ● Engine speed is 2,000 rpm.	1.0 - 4.0V★ 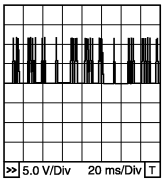 PBIB0526E

TERMINAL NO.	WIRE COLOR	ITEM	CONDITION	DATA (DC Voltage)
14	PU/R	Crankshaft position sensor (POS)	**[Engine is running]** ● **Warm-up condition** ● Idle speed **NOTE:** The pulse cycle changes depending on rpm at idle.	Approximately 3.0V★ 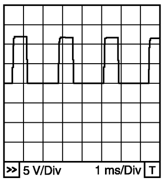 PBIB0527E
			[Engine is running] ● Engine speed is 2,000 rpm	Approximately 3.0V★ 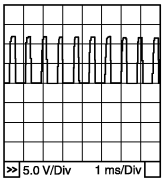 PBIB0528E
15	W	Knock sensor	**[Engine is running]** ● Idle speed	Approximately 2.5V
22 23 41 42	G/B R/B L/B Y/B	Injector No. 3 Injector No. 1 Injector No. 4 Injector No. 2	**[Engine is running]** ● **Warm-up condition** ● Idle speed **NOTE:** The pulse cycle changes depending on rpm at idle.	BATTERY VOLTAGE (11 - 14V)★ 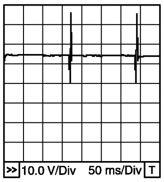 PBIB0529E
			[Engine is running] ● **Warm-up condition** ● Engine speed is 2,000 rpm	BATTERY VOLTAGE (11 - 14V)★ 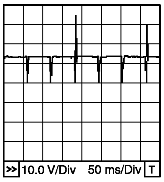 PBIB0530E
24	G/W	Heated oxygen sensor 1 heater	**[Engine is running]** ● **Warm-up condition** ● Engine speed is below 3,600 rpm.	Approximately 7.0V★ 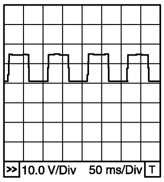 PBIB0519E
			[Engine is running] ● Engine speed is above 3,600 rpm.	BATTERY VOLTAGE (11 - 14V)

TERMINAL NO.	WIRE COLOR	ITEM	CONDITION	DATA (DC Voltage)
25	PU/R	Heated oxygen sensor 2 heater	**[Engine is running]** ● **Warm-up condition** ● Engine speed: Below 3,600 rpm after the following conditions are met. ● Keeping the engine speed between 3,500 and 4,000 rpm for 1 minute and at idle for 1 minute under on load	0 - 1.0V
			[Ignition switch: ON] ● Engine stopped. **[Engine is running]** ● Engine speed is above 3,600 rpm.	BATTERY VOLTAGE (11 - 14V)
29	Y	VIAS control solenoid valve	**[Engine is running]** ● Idle speed	BATTERY VOLTAGE (11 - 14V)
			[Engine is running] ● Engine speed is above 5,000 rpm	0 - 1.0V
32	L/W	EVAP control system pressure sensor	**[Ignition switch: ON]**	Approximately 1.8 - 4.8V
34	Y/G	Intake air temperature sensor	**[Engine is running]**	Approximately 0 - 4.8V Output voltage varies with intake air temperature.
35	P/L	Heated oxygen sensor 1	**[Engine is running]** ● **Warm-up condition** ● Engine speed is 2,000 rpm	0 - Approximately 1.0V (Periodically change)
45	P	EVAP canister purge volume control solenoid valve	**[Engine is running]** ● Idle speed	BATTERY VOLTAGE (11 - 14V)★ 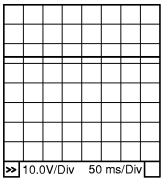 PBIB0050E
			[Engine is running] ● Engine speed is about 2,000 rpm (More than 100 seconds after starting engine)	Approximately 10V★ 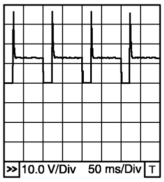 PBIB0520E
47	R	Sensor power supply (Throttle position sensor)	**[Ignition switch: ON]**	Approximately 5V
48	L	Sensor power supply (EVAP control system pressure sensor)	**[Ignition switch: ON]**	Approximately 5V
49	R	Sensor power supply (Refrigerant pressure sensor)	**[Ignition switch: ON]**	Approximately 5V

TERMINAL NO.	WIRE COLOR	ITEM	CONDITION	DATA (DC Voltage)
50	W	Throttle position sensor 1	**[Ignition switch: ON]** ● Engine stopped ● Shift lever: D (A/T), 1ST (M/T) ● Accelerator pedal: Fully released	More than 0.36V
			[Ignition switch: ON] ● Engine stopped ● Shift lever: D (A/T), 1ST (M/T) ● Accelerator pedal: Fully depressed	Less than 4.75V
51	OR	Mass air flow sensor	**[Engine is running]** ● **Warm-up condition** ● Idle speed	0.9 - 1.1V
			[Engine is running] ● **Warm-up condition** ● Engine speed is 2,500 rpm.	1.6 - 1.9V
61 62 80 81	L/R B/R GY/R PU	Ignition signal No. 3 Ignition signal No. 1 Ignition signal No. 4 Ignition signal No. 2	**[Engine is running]** ● **Warm-up condition** ● Idle speed **NOTE:** The pulse cycle changes depending on rpm at idle.	0 - 0.1V★ 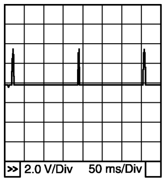 PBIB0521E
			[Engine is running] ● **Warm-up condition** ● Engine speed is 2,000 rpm.	0 - 0.2V★ 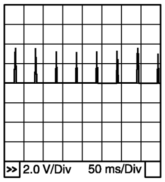 PBIB0522E
66	B	Sensor ground (Throttle position sensor)	**[Engine is running]** ● **Warm-up condition** ● Idle speed	Approximately 0V
67	B	Sensor ground	**[Engine is running]** ● **Warm-up condition** ● Idle speed	Approximately 0V
68	R	Sensor power supply (Power steering pressure sensor)	**[Ignition switch: ON]**	Approximately 5V
69	R	Throttle position sensor 2	**[Ignition switch: ON]** ● Engine stopped ● Shift lever: D (A/T), 1ST (M/T) ● Accelerator pedal: Fully released	Less than 4.75V
			[Ignition switch: ON] ● Engine stopped ● Shift lever: D (A/T), 1ST (M/T) ● Accelerator pedal: Fully depressed	More than 0.36V

TERMINAL NO.	WIRE COLOR	ITEM	CONDITION	DATA (DC Voltage)
70	Y	Refrigerant pressure sensor	**[Engine is running]** ● **Warm-up condition** ● Both A/C switch and blower switch are ON (Compressor operates.)	1.0 - 4.0V
73	BR/Y	Engine coolant temperature sensor	**[Engine is running]**	Approximately 0 - 4.8V Output voltage varies with engine coolant temperature.
74	OR/B	Heated oxygen sensor 2	**[Engine is running]** ● **Warm-up condition** ● Revving engine from idle up to 3,000 rpm quickly after the following conditions are met. ● Keeping the engine speed between 3,500 and 4,000 rpm for 1 minute and at idle for 1 minute under no load.	0 - Approximately 1.0V
78	B	Sensor ground (Heated oxygen sensor)	**[Engine is running]** ● **Warm-up condition** ● Idle speed	Approximately 0V
82	R/Y	Sensor ground (Accelerator pedal position sensor 1)	**[Engine is running]** ● **Warm-up condition** ● Idle speed	Approximately 0V
83	L	Sensor ground (Accelerator pedal position sensor 2)	**[Engine is running]** ● **Warm-up condition** ● Idle speed	Approximately 0V
84	L/Y	Electrical load signal (Headlamp signal)	**[Lighting switch: ON]** ● Lighting switch: 1st or 2nd	BATTERY VOLTAGE (11 - 14V)
			[Lighting switch: ON] ● Lighting switch: OFF	Approximately 0V
85	LG	DATA link connector	**[Ignition switch: ON]** ● CONSULT-II or GST is disconnected.	BATTERY VOLTAGE (11 - 14V)
86	GY/R	CAN communication line	**[Ignition switch: ON]**	Approximately 2.3V
89	G	Cooling fan relay (High)	**[Engine is running]** ● Cooling fan: Not operating	BATTERY VOLTAGE (11 - 14V)
			[Engine is running] ● Cooling fan: High speed operating	0 - 1.0V
90	R	Sensor power supply (Accelerator pedal position sensor 1)	**[Ignition switch: ON]**	Approximately 5V
91	BR/Y	Sensor power supply (Accelerator pedal position sensor 2)	**[Ignition switch: ON]**	Approximately 5V
93	BR	Electrical load signal (Rear window defogger signal)	**[Ignition switch: ON]** ● Rear window defogger switch: ON	BATTERY VOLTAGE (11 - 14V)
			[Ignition switch: ON] ● Rear window defogger switch: OFF	Approximately 0V
94	G/R	CAN communication line	**[Ignition switch: ON]**	Approximately 2.8V

TERMINAL NO.	WIRE COLOR	ITEM	CONDITION	DATA (DC Voltage)
96	LG/B	Heater fan switch	**[Engine is running]** ● Heater fan switch: ON	Approximately 0V
			[Engine is running] ● Heater fan switch: OFF	BATTERY VOLTAGE (11 - 14V)
97	PU	Cooling fan relay (Low)	**[Engine is running]** ● cooling fan is not operating	BATTERY VOLTAGE (11 - 14V)
			[Engine is running] ● Cooling fan is low speed operating	0 - 1.0V
98	B/W	Accelerator pedal position sensor 2	**[Ignition switch: ON]** ● Engine stopped ● Accelerator pedal: Fully released	0.15 - 0.6V
			[Ignition switch: ON] ● Engine stopped ● Accelerator pedal: Fully depressed	1.95 - 2.4V
99	W/R	ASCD steering switch	**[Ignition switch: ON]** ● ASCD steering switch: OFF	Approximately 4V
			[Ignition switch: ON] ● MAIN (CRUISE) switch: Pressed	Approximately 0V
			[Ignition switch: ON] ● CANCEL switch: Pressed	Approximately 1V
			[Ignition switch: ON] ● RESUME/ACCEL switch: Pressed	Approximately 3V
			[Ignition switch: ON] ● SET/COAST switch: Pressed	Approximately 2V
101	P	Stop lamp switch	**[Ignition switch: OFF]** ● Brake pedal: Fully released	Approximately 0V
			[Ignition switch: OFF] ● Brake pedal: Slightly depressed	BATTERY VOLTAGE (11 - 14V)
102	G/OR	PNP switch	**[Ignition switch: ON]** ● Shift lever: P or N (A/T), Neutral (M/T)	Approximately 0V
			[Ignition switch: ON] ● Except above position	BATTERY VOLTAGE (11 - 14V)
104	W/B	Throttle control motor relay	**[Ignition switch: OFF]**	BATTERY VOLTAGE (11 - 14V)
			[Ignition switch: ON]	0 - 1.0V
106	W	Accelerator pedal position sensor 1	**[Ignition switch: ON]** ● Engine stopped ● Accelerator pedal: Fully released	0.5 - 1.0V
			[Ignition switch: ON] ● Engine stopped ● Accelerator pedal: Fully depressed	3.9 - 4.7V
107	P/L	Fuel tank temperature sensor	**[Engine is running]**	Approximately 0 - 4.8V Output voltage varies with fuel tank temperature.

TERMINAL NO.	WIRE COLOR	ITEM	CONDITION	DATA (DC Voltage)
108	GY/L	ASCD brake switch	**[Ignition switch: ON]** ● Brake pedal: Slightly depressed (A/T) ● Brake pedal and/or clutch pedal: Slightly depressed (M/T)	Approximately 0V
			[Ignition switch: ON] ● Brake pedal: Fully released (A/T) ● Brake pedal and clutch pedal: Fully released (M/T)	BATTERY VOLTAGE (11 - 14V)
109	B/R	Ignition switch	**[Ignition switch: OFF]**	0V
			[Ignition switch: ON]	BATTERY VOLTAGE (11 - 14V)
110	L/R	Air conditioner switch signal	**[Engine is running]** ● Both A/C switch and blower switch: ON	Approximately 0V
			[Engine is running] ● A/C switch is OFF	BATTERY VOLTAGE (11 - 14V)
111	G/W	ECM relay (Self shut-off)	**[Engine is running]** **[Ignition switch: OFF]** ● A few seconds after turning ignition switch OFF	0 - 1.0V
			[Ignition switch: OFF] ● More than a few seconds after turning ignition switch OFF	BATTERY VOLTAGE (11 - 14V)
114	B/OR	Fuel pump relay	**[Ignition switch: ON]** ● For 1 second after turning ignition switch ON **[Engine is running]**	0 - 1.0V
			[Ignition switch: ON] ● More than 1 second after turning ignition switch ON	BATTERY VOLTAGE (11 - 14V)
115 116	B B	ECM ground	**[Engine is running]** ● Idle speed	Body ground
117	G	EVAP canister vent control valve	**[Ignition switch: ON]**	BATTERY VOLTAGE (11 - 14V)
119 120	SB GY	Power supply for ECM	**[Ignition switch: ON]**	BATTERY VOLTAGE (11 - 14V)
121	W/L	Power supply for ECM (Back-up)	**[Ignition switch: OFF]**	BATTERY VOLTAGE (11 - 14V)

★: Average voltage for pulse signal (Actual pulse signal can be confirmed by oscilloscope.)

CONSULT-II Function (ENGINE)

ABS00CLM

FUNCTION

Diagnostic test mode	Function
Work support	This mode enables a technician to adjust some devices faster and more accurately by following the indications on the CONSULT-II unit.
Self-diagnostic results	Self-diagnostic results such as 1st trip DTC, DTCs and 1st trip freeze frame data or freeze frame data can be read and erased quickly.*
Data monitor	Input/Output data in the ECM can be read.
Data monitor (SPEC)	Input/Output of the specification for Basic fuel schedule, AFM, A/F feedback control value and the other data monitor items can be read.
CAN diagnostic support monitor	The results of transmit/receive diagnosis of CAN communication can be read.
Active test	Diagnostic Test Mode in which CONSULT-II drives some actuators apart from the ECMs and also shifts some parameters in a specified range.
Function test	This mode is used to inform customers when their vehicle condition requires periodic maintenance.
DTC & SRT confirmation	The status of system monitoring tests and the self-diagnosis status/result can be confirmed.
ECM part number	ECM part number can be read.

*: The following emission-related diagnostic information is cleared when the ECM memory is erased.

- Diagnostic trouble codes
- 1st trip diagnostic trouble codes
- Freeze frame data
- 1st trip freeze frame data
- System readiness test (SRT) codes
- Test values

ENGINE CONTROL COMPONENT PARTS/CONTROL SYSTEMS APPLICATION

		Item	DIAGNOSTIC TEST MODE							
			WORK SUPPORT	SELF-DIAGNOSTIC RESULTS		DATA MONITOR	DATA MONITOR (SPEC)	ACTIVE TEST	DTC & SRT CONFIRMATION	
				DTC*1	FREEZE FRAME DATA*2				SRT STATUS	DTC WORK SUPPORT
ENGINE CONTROL COMPONENT PARTS	INPUT	Crankshaft position sensor (POS)		×	×	×	×			
		Camshaft position sensor (PHASE)		×		×	×			
		Mass air flow sensor		×		×	×			
		Engine coolant temperature sensor		×	×	×	×	×		
		Heated oxygen sensor 1		×		×	×		×	×
		Heated oxygen sensor 2		×		×	×		×	×
		Vehicle speed sensor		×	×	×	×			
		Accelerator pedal position sensor		×		×	×			
		Throttle position sensor		×		×	×			
		Fuel tank temperature sensor		×		×	×	×		
		EVAP control system pressure sensor		×		×	×			
		Intake air temperature sensor		×	×	×	×			
		Knock sensor		×						
		Refrigerant pressure sensor				×	×			
		Closed throttle position switch (accelerator pedal position sensor signal)				×	×			
		Air conditioner switch				×	×			
		Park/neutral position (PNP) switch		×		×	×			
		Stop lamp switch		×		×	×			
		Power steering pressure sensor		×		×	×			
		Battery voltage				×	×			
		Load signal				×	×			
		Snow mode switch*3				×	×			
		Fuel level sensor		×		×	×			
		ASCD steering switch		×		×	×			
		ASCD brake switch		×		×	×			
		ASCD clutch switch		×		×	×			

A
EC
C
D
E
F
G
H
I
J
K
L
M

Item			DIAGNOSTIC TEST MODE							
			WORK SUPPORT	SELF-DIAGNOSTIC RESULTS		DATA MONITOR	DATA MONITOR (SPEC)	ACTIVE TEST	DTC & SRT CONFIRMATION	
				DTC*1	FREEZE FRAME DATA*2				SRT STATUS	DTC WORK SUPPORT
ENGINE CONTROL COMPONENT PARTS	OUTPUT	Fuel injector				×	×	×		
		Power transistor (Ignition timing)				×	×	×		
		Throttle control motor relay		×		×	×			
		Throttle control motor		×						
		EVAP canister purge volume control solenoid valve		×		×	×	×		×
		Air conditioner relay				×	×			
		Fuel pump relay	×			×	×	×		
		Cooling fan relay		×		×	×	×		
		Heated oxygen sensor 1 heater		×		×	×		×	
		Heated oxygen sensor 2 heater		×		×	×		×	
		EVAP canister vent control valve	×	×		×	×	×		
		Intake valve timing control solenoid valve		×		×	×	×		
		VIAS control solenoid valve		×		×	×	×		
		Calculated load value			×	×	×			

X: Applicable
*1: This item includes 1st trip DTCs.
*2: This mode includes 1st trip freeze frame data or freeze frame data. The items appear on CONSULT-II screen in freeze frame data mode only if a 1st trip DTC or DTC is detected. For details, refer to EC-52 .
*3: With 2WD models.

INSPECTION PROCEDURE

1. Turn ignition switch OFF.
2. Connect CONSULT-II and CONSULT-II CONVERTER to data link connector, which is located under LH dash panel.
3. Turn ignition switch ON.

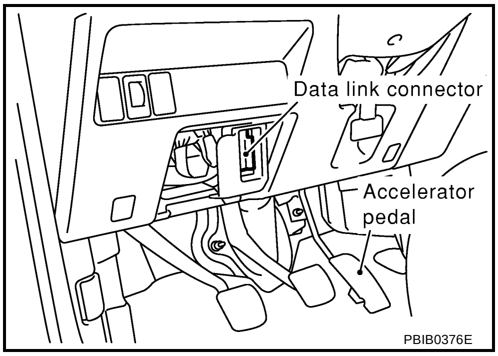

4. Touch “START” (NISSAN BASED VHCL).

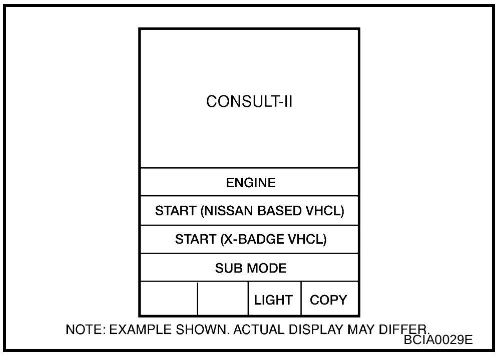

5. Touch “ENGINE”.
   If “ENGINE” is not indicated, go to GI-38, "CONSULT-II Data Link Connector (DLC) Circuit" .

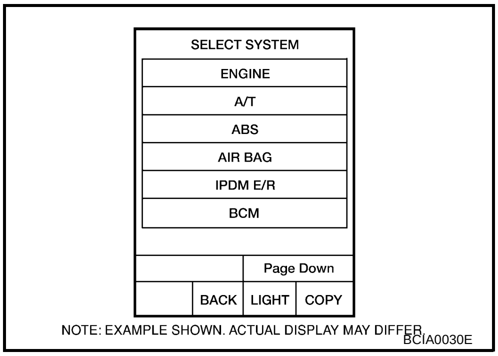

6. Perform each diagnostic test mode according to each service procedure.

For further information, see the CONSULT-II Operation Manual.

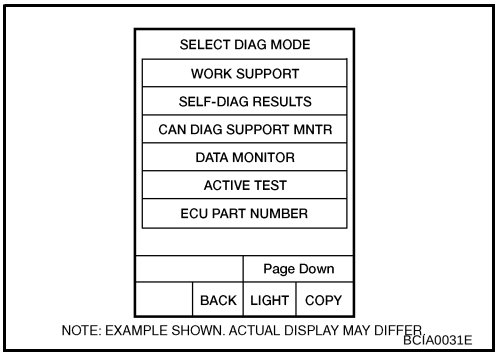

WORK SUPPORT MODE

Work Item

WORK ITEM	CONDITION	USAGE
FUEL PRESSURE RELEASE	● FUEL PUMP WILL STOP BY TOUCHING START DURING IDLING. CRANK A FEW TIMES AFTER ENGINE STALLS.	When releasing fuel pressure from fuel line
IDLE AIR VOL LEARN	● THE IDLE AIR VOLUME THAT KEEPS THE ENGINE WITHIN THE SPECIFIED RANGE IS MEMORIZED IN ECM.	When learning the idle air volume
SELF-LEARNING CONT	● THE COEFFICIENT OF SELF-LEARNING CONTROL MIXTURE RATIO RETURNS TO THE ORIGINAL COEFFICIENT.	When clearing the coefficient of self-learning control value
EVAP SYSTEM CLOSE	CLOSE THE EVAP CANISTER VENT CONTROL VALVE IN ORDER TO MAKE EVAP SYSTEM CLOSE UNDER THE FOLLOWING CONDITIONS. ● IGN SW ON ● ENGINE NOT RUNNING ● AMBIENT TEMPERATURE IS ABOVE 0°C (32°F). ● NO VACUUM AND NO HIGH PRESSURE IN EVAP SYSTEM ● FUEL TANK TEMP. IS MORE THAN 0°C (32°F). ● WITHIN 10 MINUTES AFTER STARTING “EVAP SYSTEM CLOSE” ● WHEN TRYING TO EXECUTE “EVAP SYSTEM CLOSE” UNDER THE CONDITION EXCEPT ABOVE, CONSULT-II WILL DISCONTINUE IT AND DISPLAY APPROPRIATE INSTRUCTION. **NOTE:** **WHEN STARTING ENGINE, CONSULT-II MAY DISPLAY “BATTERY VOLTAGE IS LOW. CHARGE BATTERY”, EVEN IN USING CHARGED BATTERY.**	When detecting EVAP vapor leak point of EVAP system
VIN REGISTRATION	● IN THIS MODE, VIN IS REGISTE RED IN ECM.	When registering VIN in ECM

WORK ITEM	CONDITION	USAGE
TARGET IDLE RPM ADJ*	● IDLE CONDITION	When setting target idle speed
TARGET IGN TIM ADJ*	● IDLE CONDITION	When adjusting target ignition timing

*: This function is not necessary in the usual service procedure.

SELF-DIAG RESULTS MODE

Self Diagnostic Item

Regarding items of “DTC and 1st trip DTC”, refer to EC-48, "EMISSION-RELATED DIAGNOSTIC INFORMATION ITEMS" .

Freeze Frame Data and 1st Trip Freeze Frame Data

Freeze frame data item*	Description
DIAG TROUBLE CODE [PXXXX]	● The engine control component part/control system has a trouble code, it is displayed as “PXXXX”. (Refer to EC-8, "INDEX FOR DTC" .)
FUEL SYS-B1	● “Fuel injection system status” at the moment a malfunction is detected is displayed. ● One mode in the following is displayed. “Mode2”: Open loop due to detected system malfunction “Mode3”: Open loop due to driving conditions (power enrichment, deceleration enleanment) “Mode4”: Closed loop - using oxygen sensor(s) as feedback for fuel control “Mode5”: Open loop - has not yet satisfied condition to go to closed loop
CAL/LD VALUE [%]	● The calculated load value at the moment a malfunction is detected is displayed.
COOLANT TEMP [°C] or [°F]	● The engine coolant temperature at the moment a malfunction is detected is displayed.
L-FUEL TRM-B1 [%]	● “Long-term fuel trim” at the moment a malfunction is detected is displayed. ● The long-term fuel trim indicates much more gradual feedback compensation to the base fuel schedule than short-term fuel trim.
S-FUEL TRM-B1 [%]	● “Short-term fuel trim” at the moment a malfunction is detected is displayed. ● The short-term fuel trim indicates dynamic or instantaneous feedback compensation to the base fuel schedule.
ENGINE SPEED [rpm]	● The engine speed at the moment a malfunction is detected is displayed.
VEHICL SPEED [km/h] or [mph]	● The vehicle speed at the moment a malfunction is detected is displayed.
B/FUEL SCHDL [msec]	● The base fuel schedule at the moment a malfunction is detected is displayed.
INT/A TEMP SE [°C] or [°F]	● The intake air temperature at the moment a malfunction is detected is displayed.

*: The items are the same as those of 1st trip freeze frame data.

DATA MONITOR MODE

Monitored Item

×: Applicable

Monitored item [Unit]	ECM INPUT SIGNALS	MAIN SIGNALS	Description	Remarks
ENG SPEED [rpm]	×	×	● Indicates the engine speed computed from the signals of the crankshaft position sensor (POS) and camshaft position sensor (PHASE).	● Accuracy becomes poor if engine speed drops below the idle rpm. ● If the signal is interrupted while the engine is running, an abnormal value may be indicated.
MAS A/F SE-B1 [V]	×	×	● The signal voltage of the mass air flow sensor is displayed.	● When the engine is stopped, a certain value is indicated.

Monitored item [Unit]	ECM INPUT SIG-NALS	MAIN SIG-NALS	Description	Remarks
B/FUEL SCHDL [msec]		×	● "Base fuel schedule" indicates the fuel injection pulse width programmed into ECM, prior to any learned on board correction.	
A/F ALPHA-B1 [%]		×	● The mean value of the air-fuel ratio feedback correction factor per cycle is indicated.	● When the engine is stopped, a certain value is indicated. ● This data also includes the data for the air-fuel ratio learning control.
COOLAN TEMP/S [°C] or [°F]	×	×	● The engine coolant temperature (determined by the signal voltage of the engine coolant temperature sensor) is displayed.	● When the engine coolant temperature sensor is open or short-circulated, ECM enters fail-safe mode. The engine coolant temperature determined by the ECM is displayed.
HO2S1 (B1) [V]	×	×	● The signal voltage of the heated oxygen sensor 1 is displayed.	
HO2S2 (B1) [V]	×	×	● The signal voltage of the heated oxygen sensor 2 is displayed.	
HO2S1 MNTR (B1) [RICH/LEAN]	×	×	● Display of heated oxygen sensor 1 signal during air-fuel ratio feedback control: RICH: Means the mixture became rich, and control is being affected toward a leaner mixture. LEAN: Means the mixture became lean, and control is being affected toward a rich mixture.	● After turning ON the ignition switch, "RICH" is displayed until air-fuel mixture ratio feedback control begins. ● When the air-fuel ratio feedback is clamped, the value just before the clamping is displayed continuously.
HO2S2 MNTR (B1) [RICH/LEAN]	×		● Display of heated oxygen sensor 2 signal: RICH: Means the amount of oxygen after three way catalyst is relatively small. LEAN: Means the amount of oxygen after three way catalyst is relatively large.	● When the engine is stopped, a certain value is indicated.
VHCL SPEED SE [km/h] or [mph]	×	×	● The vehicle speed computed from the vehicle speed signal is displayed.	
BATTERY VOLT [V]	×	×	● The power supply voltage of ECM is displayed.	
ACCEL SEN 1 [V]	×	×	● The accelerator pedal position sensor signal voltage is displayed.	● ACCEL SEN 2 signal is converted by ECM internally. Thus, it differs from ECM terminal voltage signal.
ACCEL SEN 2 [V]	×			
THRTL SEN 1 [V]	×	×	● The throttle position sensor signal voltage is displayed.	● THRTL SEN 2 signal is converted by ECM internally. Thus, it differs from ECM terminal voltage signal.
THRTL SEN 2 [V]	×			
FUEL T/TEMP SE [°C] or [°F]	×		● The fuel temperature (determined by the signal voltage of the fuel tank temperature sensor) is displayed.	
INT/A TEMP SE [°C] or [°F]	×	×	● The intake air temperature (determined by the signal voltage of the intake air temperature sensor) is indicated.	
EVAP SYS PRES [V]	×		● The signal voltage of EVAP control system pressure sensor is displayed.	
FUEL LEVEL SE [V]	×		● The signal voltage of the fuel level sensor is displayed.	
START SIGNAL [ON/OFF]	×	×	● Indicates [ON/OFF] condition from the starter signal.	● After starting the engine, [OFF] is displayed regardless of the starter signal.

Monitored item [Unit]	ECM INPUT SIG-NALS	MAIN SIG-NALS	Description	Remarks
CLSD THL POS [ON/OFF]	×	×	● Indicates idle position [ON/OFF] computed by ECM according to the accelerator pedal position sensor signal.	
AIR COND SIG [ON/OFF]	×	×	● Indicates [ON/OFF] condition of the air conditioner switch as determined by the air conditioner signal.	
P/N POSI SW [ON/OFF]	×	×	● Indicates [ON/OFF] condition from the park/neutral position (PNP) switch signal.	
PW/ST SIGNAL [ON/OFF]	×	×	● [ON/OFF] condition of the power steering system (determined by the signal voltage of the power steering pressure sensor signal) is indicated.	
LOAD SIGNAL [ON/OFF]	×	×	● Indicates [ON/OFF] condition from the electrical load signal. ON: Rear window defogger switch is ON and/or lighting switch is in 1st or 2nd position and/or heater fan switch is ON. OFF: Rear window defogger switch and lighting switch and heater fan switch are OFF.	
SNOW MODE SW* [ON/OFF]			● Indicates [NO/OFF] condition from the snow mode switch signal.	
IGNITION SW [ON/OFF]	×	×	● Indicates [ON/OFF] condition from ignition switch.	
HEATER FAN SW [ON/OFF]	×		● Indicates [ON/OFF] condition from the heater fan switch signal.	
BRAKE SW [ON/OFF]	×		● Indicates [ON/OFF] condition from the stop lamp switch signal.	
INJ PULSE-B1 [msec]		×	● Indicates the actual fuel injection pulse width compensated by ECM according to the input signals.	● When the engine is stopped, a certain computed value is indicated.
IGN TIMING [BTDC]		×	● Indicates the ignition timing computed by ECM according to the input signals.	● When the engine is stopped, a certain value is indicated.
CAL/LD VALUE [%]			● “Calculated load value” indicates the value of the current airflow divided by peak airflow.	
MASS AIRFLOW [g·m/s]			● Indicates the mass airflow computed by ECM according to the signal voltage of the mass air flow sensor.	
PURG VOL C/V [%]			● Indicates the EVAP canister purge volume control solenoid valve control value computed by the ECM according to the input signals. ● The opening becomes larger as the value increases.	
INT/V TIM (B1) [°CA]			● Indicates [°CA] of intake camshaft advanced angle.	
INT/V SOL (B1) [%]			● The control value of the intake valve timing control solenoid valve (determined by ECM according to the input signal) is indicated. ● The advance angle becomes larger as the value increases.	

Monitored item [Unit]	ECM INPUT SIG-NALS	MAIN SIG-NALS	Description	Remarks
VIAS S/V [ON/OFF]			● The control condition of the VIAS control solenoid valve (determined by ECM according to the input signals) is indicated. ON: VIAS control solenoid valve is operating. OFF: VIAS control solenoid valve is not operating.	
AIR COND RLY [ON/OFF]		×	● The air conditioner relay control condition (determined by ECM according to the input signals) is indicated.	
FUEL PUMP RLY [ON/OFF]		×	● Indicates the fuel pump relay control condition determined by ECM according to the input signals.	
VENT CONT/V [ON/OFF]			● The control condition of the EVAP canister vent control valve (determined by ECM according to the input signals) is indicated. ON: Closed OFF: Open	
THRTL RELAY [ON/OFF]		×	● Indicates the throttle control motor relay control condition determined by the ECM according to the input signals.	
COOLING FAN [HI/LOW/OFF]		×	● Indicates the condition of the cooling fan (determined by ECM according to the input signals). HI: High speed operation LOW: Low speed operation OFF: Stop	
HO2S1 HTR (B1) [ON/OFF]			● Indicates [ON/OFF] condition of heated oxygen sensor 1 heater determined by ECM according to the input signals.	
HO2S2 HTR (B1) [ON/OFF]			● Indicates [ON/OFF] condition of heated oxygen sensor 2 heater determined by ECM according to the input signals.	
IDL A/V LEARN [YET/CMPLT]			● Display the condition of Idle Air Volume Learning YET: Idle Air Volume Learning has not been performed yet. CMPLT: Idle Air Volume Learning has already been performed successfully.	
TRVL AFTER MIL [km] or [mile]			● Distance traveled while MIL is activated.	
O2SEN HTR DTY [%]			● Indicates the heated oxygen sensor 1 heater control value computed by the ECM according to the input signals.	
AC PRESS SEN [V]			● The signal voltage from the refrigerant pressure sensor is displayed.	
VHCL SPEED SE [km/h] or [mph]			● The vehicle speed computed from the vehicle speed signal sent from TCM is displayed.	
SET VHCL SPD [km/h] or [mph]			● The preset vehicle speed is displayed.	
MAIN SW [ON/OFF]			● Indicates [ON/OFF] condition from MAIN (CRUISE) switch signal.	

Monitored item [Unit]	ECM INPUT SIG-NALS	MAIN SIG-NALS	Description	Remarks
CANCEL SW [ON/OFF]			● Indicates [ON/OFF] condition from CANCEL switch signal.	
RESUME/ACC SW [ON/OFF]			● Indicates [ON/OFF] condition from RESUME/ACCEL switch signal.	
SET SW [ON/OFF]			● Indicates [ON/OFF] condition from SET/COAST switch signal.	
BRAKE SW1 [ON/OFF]			● Indicates [ON/OFF] condition from ASCD brake switch signal, and ASCD clutch switch signal (M/T models).	
BRAKE SW2 [ON/OFF]			● Indicates [ON/OFF] condition of stop lamp switch signal.	
VHCL SPD CUT [NON/CUT]			● Indicates the vehicle cruise condition. NON: Vehicle speed is maintained at the ASCD set speed. CUT: Vehicle speed increased to excessively high compared with the ASCD set speed, and ASCD operation is cut off.	
LO SPEED CUT [NON/CUT]			● Indicates the vehicle cruise condition. NON: Vehicle speed is maintained at the ASCD set speed. CUT: Vehicle speed decreased to excessively low compared with the ASCD set speed, and ASCD operation is cut off.	
AT OD MONITOR [ON/OFF]			● Indicates [ON/OFF] condition of A/T O/D according to the input signal from the TCM.	
AT OD CANCEL [ON/OFF]			● Indicates [ON/OFF] condition of A/T O/D cancel signal sent from the TCM.	
CRUISE LAMP [ON/OFF]			● Indicates [ON/OFF] condition of CRUISE lamp determined by the ECM according to the input signals.	
SET LAMP [ON/OFF]			● Indicates [ON/OFF] condition of SET lamp determined by the ECM according to the input signals.	
Voltage [V]			● Voltage, frequency, duty cycle or pulse width measured by the probe.	● Only “#” is displayed if item is unable to be measured. ● Figures with “#”s are temporary ones. They are the same figures as an actual piece of data which was just previously measured.
Frequency [msec], [Hz] or [%]				
DUTY-HI				
DUTY-LOW				
PLS WIDTH-HI				
PLS WIDTH-LOW				

*: With 2WD models.

NOTE:

Any monitored item that does not match the vehicle being diagnosed is deleted from the display automatically.

DATA MONITOR (SPEC) MODE

Monitored Item

Monitored item [Unit]	ECM input signals	Main signals	Description	Remarks
ENG SPEED [rpm]	×		● Indicates the engine speed computed from the signal of the crankshaft position sensor (POS) and camshaft position sensor (PHASE).	
MAS A/F SE-B1 [V]	×	×	● The signal voltage of the mass air flow sensor specification is displayed.	● When engine is running specification range is indicated.
B/FUEL SCHDL [msec]			● “Base fuel schedule” indicates the fuel injection pulse width programmed into ECM, prior to any learned on board correction.	● When engine is running specification range is indicated.
A/F ALPHA-B1 [%]		×	● The mean value of the air-fuel ratio feedback correction factor per cycle is indicated.	● When engine is running specification range is indicated. ● This data also includes the data for the air-fuel ratio learning control.

NOTE:
Any monitored item that does not match the vehicle being diagnosed is deleted from the display automatically.

ACTIVE TEST MODE

Test Item

TEST ITEM	CONDITION	JUDGEMENT	CHECK ITEM (REMEDY)
FUEL INJECTION	● Engine: Return to the original trouble condition ● Change the amount of fuel injection using CONSULT-II.	If trouble symptom disappears, see CHECK ITEM.	● Harness and connectors ● Fuel injector ● Heated oxygen sensor 1
IGNITION TIMING	● Engine: Return to the original trouble condition ● Timing light: Set ● Retard the ignition timing using CONSULT-II.	If trouble symptom disappears, see CHECK ITEM.	● Perform Idle Air Volume Learning.
POWER BALANCE	● Engine: After warming up, idle the engine. ● A/C switch OFF ● Shift lever P or N (A/T), Neutral (M/T) ● Cut off each injector signal one at a time using CONSULT-II.	Engine runs rough or dies.	● Harness and connectors ● Compression ● Fuel injector ● Power transistor ● Spark plug ● Ignition coil
COOLING FAN*	● Ignition switch: ON ● Turn the cooling fan “LOW”, “HI” and “OFF” with CONSULT-II.	Cooling fan moves and stops.	● Harness and connectors ● Cooling fan relay ● Cooling fan motor
ENG COOLANT TEMP	● Engine: Return to the original trouble condition ● Change the engine coolant temperature using CONSULT-II.	If trouble symptom disappears, see CHECK ITEM.	● Harness and connectors ● Engine coolant temperature sensor ● Fuel injector
FUEL PUMP RELAY	● Ignition switch: ON (Engine stopped) ● Turn the fuel pump relay “ON” and “OFF” using CONSULT-II and listen to operating sound.	Fuel pump relay makes the operating sound.	● Harness and connectors ● Fuel pump relay

TEST ITEM	CONDITION	JUDGEMENT	CHECK ITEM (REMEDY)
VIAS SOL VALVE	● Ignition switch: ON ● Turn solenoid valve “ON” and “OFF” with CONSULT-II and listen for operating sound.	Solenoid valve makes an operating sound.	● Harness and connectors ● Solenoid valve
PURG VOL CONT/V	● Engine: After warming up, run engine at 1,500 rpm. ● Change the EVAP canister purge volume control solenoid valve opening percent using CONSULT-II.	Engine speed changes according to the opening percent.	● Harness and connectors ● Solenoid valve
FUEL/T TEMP SEN	● Change the fuel tank temperature using CONSULT-II.		
VENT CONTROL/V	● Ignition switch: ON (Engine stopped) ● Turn solenoid valve “ON” and “OFF” with the CONSULT-II and listen to operating sound.	Solenoid valve makes an operating sound.	● Harness and connectors ● Solenoid valve
V/T ASSIGN ANGLE	● Engine: Return to the original trouble condition ● Change intake valve timing using CONSULT-II.	If trouble symptom disappears, see CHECK ITEM.	● Harness and connectors ● Intake valve timing control solenoid valve

*: Leaving cooling fan “OFF” with CONSULT-II while engine is running may cause the engine to over heat.

DTC & SRT CONFIRMATION MODE

SRT STATUS Mode

For details, refer to EC-52, "SYSTEM READINESS TEST (SRT) CODE" .

SRT WORK SUPPORT Mode

This mode enables a technician to drive a vehicle to set the SRT while monitoring the SRT status.

DTC WORK SUPPORT Mode

Test mode	Test item	Condition	Reference page
EVAPORATIVE SYSTEM	PURGE FLOW P0441	Refer to corresponding trouble diagnosis for DTC.	EC-332
	EVAP SML LEAK P0442/P1442*		EC-338
	EVAP V/S SML LEAK P0456/P1456*		EC-388
	PURG VOL CN/V P1444		EC-504
HO2S1	HO2S1 (B1) P0133		EC-233
	HO2S1 (B1) P0134		EC-243
	HO2S1 (B1) P1143		EC-448
	HO2S1 (B1) P1144		EC-454
HO2S2	HO2S2 (B1) P0139		EC-258
	HO2S2 (B1) P1146		EC-460
	HO2S2 (B1) P1147		EC-468

*: DTC P1442 and P1456 does not apply to T30 models but appears in DTC WORK SUPPORT MODE screens.

REAL TIME DIAGNOSIS IN DATA MONITOR MODE (RECORDING VEHICLE DATA)

Description

CONSULT-II has two kinds of triggers and they can be selected by touching “SETTING” in “DATA MONITOR” mode.

1. “AUTO TRIG” (Automatic trigger):
   - The malfunction will be identified on the CONSULT-II screen in real time.
     In other words, DTC/1st trip DTC and malfunction item will be displayed if the malfunction is detected by ECM.
     At the moment a malfunction is detected by ECM, “MONITOR” in “DATA MONITOR” screen is changed to “Recording Data: xx%” as shown at right, and the data after the malfunction detection is recorded. Then when the percentage reached 100%, “REAL-TIME DIAG” screen is displayed. If “STOP” is touched on the screen during “Recording Data: xx%”, “REAL-TIME DIAG” screen is also displayed.
     The recording time after the malfunction detection and the recording speed can be changed by “TRIGGER POINT” and “Recording Speed”. Refer to CONSULT-II Operation Manual.
2. “MANU TRIG” (Manual trigger):
   - DTC/1st trip DTC and malfunction item will not be displayed automatically on CONSULT-II screen even though a malfunction is detected by ECM.
     DATA MONITOR can be performed continuously even though a malfunction is detected.

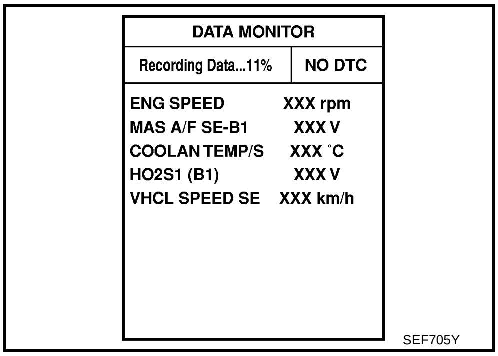

SEF705Y

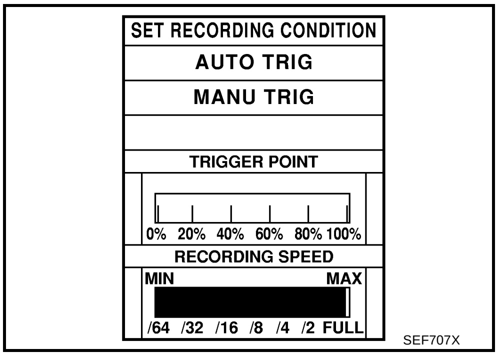

SEF707X

Operation

1. “AUTO TRIG”
   - While trying to detect the DTC/1st trip DTC by performing the DTC Confirmation Procedure, be sure to select to “DATA MONITOR (AUTO TRIG)” mode. You can confirm the malfunction at the moment it is detected.
   - While narrowing down the possible causes, CONSULT-II should be set in “DATA MONITOR (AUTO TRIG)” mode, especially in case the incident is intermittent.
     When you are inspecting the circuit by gently shaking (or twisting) the suspicious connectors, components and harness in the DTC Confirmation Procedure, the moment a malfunction is found the DTC/1st trip DTC will be displayed. (Refer to “Incident Simulation Tests” in GI-26, "How to Perform Efficient Diagnosis for an Electrical Incident" .)
2. “MANU TRIG”
   - If the malfunction is displayed as soon as “DATA MONITOR” is selected, reset CONSULT-II to “MANU TRIG”. By selecting “MANU TRIG” you can monitor and store the data. The data can be utilized for further diagnosis, such as a comparison with the value for the normal operating condition.

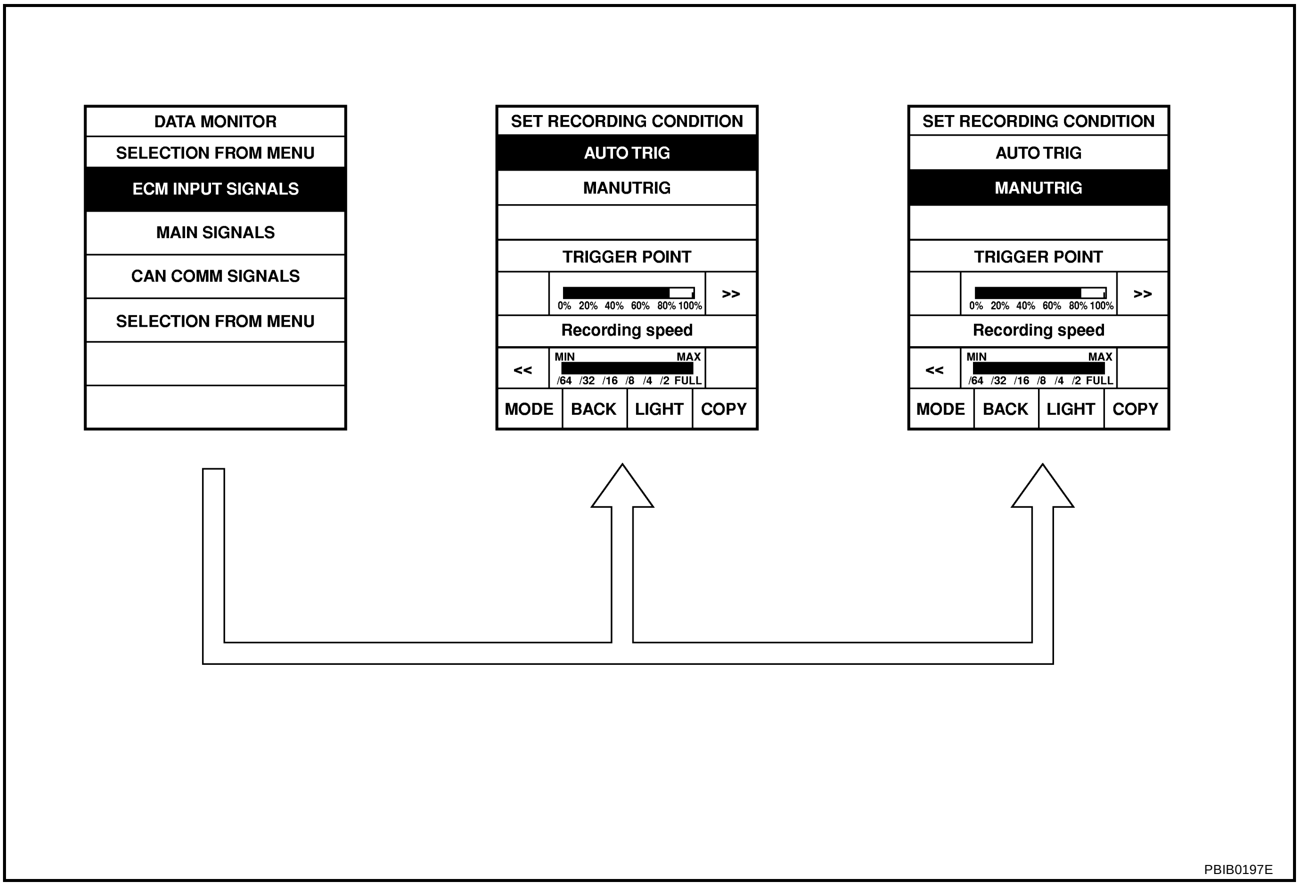

PBIB0197E

Generic Scan Tool (GST) Function

ABS00CLN

DESCRIPTION

Generic Scan Tool (OBDII scan tool) complying with SAE J1978 has 8 different functions explained below.
ISO9141 is used as the protocol.
The name GST or Generic Scan Tool is used in this service manual.

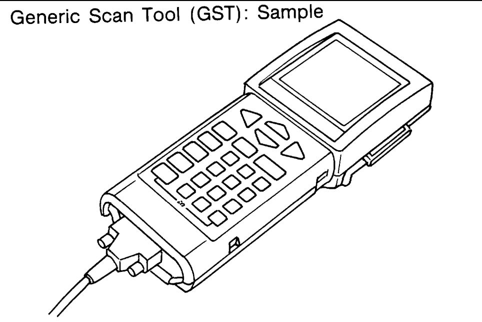

SEF139P

FUNCTION

Diagnostic test mode		Function
Service $01	READINESS TESTS	This diagnostic service gains access to current emission-related data values, including analog inputs and outputs, digital inputs and outputs, and system status information.
Service $02	(FREEZE DATA)	This diagnostic service gains access to emission-related data value which were stored by ECM during the freeze frame. For details, refer to EC-52, "FREEZE FRAME DATA AND 1ST TRIP FREEZE FRAME DATA" .
Service $03	DTCs	This diagnostic service gains access to emission-related power train trouble codes which were stored by ECM.

Diagnostic test mode		Function
Service $04	CLEAR DIAG INFO	This diagnostic service can clear all emission-related diagnostic information. This includes: ● Clear number of diagnostic trouble codes (Service $01) ● Clear diagnostic trouble codes (Service $03) ● Clear trouble code for freeze frame data (Service $01) ● Clear freeze frame data (Service $02) ● Reset status of system monitoring test (Service $01) ● Clear on board monitoring test results (Service $06 and $07)
Service $06	(ON BOARD TESTS)	This diagnostic service accesses the results of on board diagnostic monitoring tests of specific components/systems that are not continuously monitored.
Service $07	(ON BOARD TESTS)	This diagnostic service enables the off board test drive to obtain test results for emission-related powertrain components/systems that are continuously monitored during normal driving conditions.
Service $08	—	This diagnostic service can close EVAP system in ignition switch ON position (Engine stopped). When this diagnostic service is performed, EVAP canister vent control valve can be closed. In the following conditions, this diagnostic service cannot function. ● Low ambient temperature ● Low battery voltage ● Engine running ● Ignition switch OFF ● Low fuel temperature ● Too much pressure is applied to EVAP system
Service $09	(CALIBRATION ID)	This diagnostic service enables the off-board test device to request specific vehicle information such as Vehicle Identification Number (VIN) and Calibration IDs.

INSPECTION PROCEDURE

1. Turn ignition switch OFF.
2. Connect GST to data link connector, which is located under LH dash panel near the fuse box cover.
3. Turn ignition switch ON.

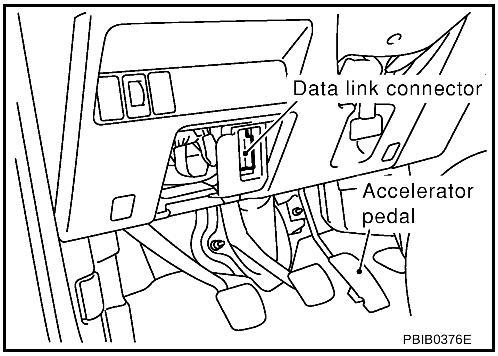

4. Enter the program according to instruction on the screen or in the operation manual.

(*: Regarding GST screens in this section, sample screens are shown.)

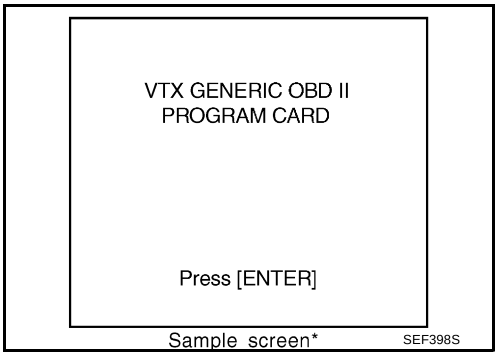

5. Perform each diagnostic mode according to each service procedure.

For further information, see the GST Operation Manual of the tool maker.

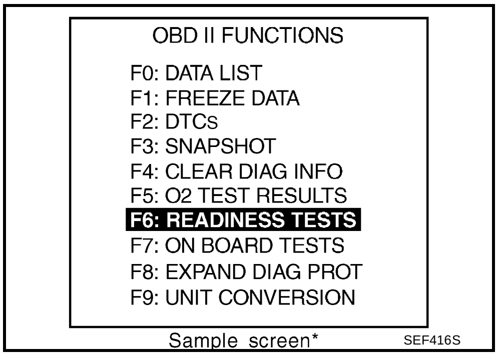

Sample screen*

SEF416S

CONSULT-II Reference Value in Data Monitor

ABS00CLO

Remarks:
- Specification data are reference values.
- Specification data are output/input values which are detected or supplied by the ECM at the connector.
  * Specification data may not be directly related to their components signals/values/operations.
  i.e. Adjust ignition timing with a timing light before monitoring IGN TIMING, because the monitor may show the specification data in spite of the ignition timing not being adjusted to the specification data. This IGN TIMING monitors the data calculated by the ECM according to the signals input from the camshaft position sensor and other ignition timing related sensors.

MONITOR ITEM	CONDITION		SPECIFICATION
ENG SPEED	● Run engine and compare the CONSULT-II value with tachometer indication.		Almost the same speed as the tachometer indication.
MAS A/F SE-B1	See EC-143, "TROUBLE DIAGNOSIS - SPECIFICATION VALUE" .		
B/FUEL SCHDL	See EC-143, "TROUBLE DIAGNOSIS - SPECIFICATION VALUE" .		
A/F ALPHA-B1	See EC-143, "TROUBLE DIAGNOSIS - SPECIFICATION VALUE" .		
COOLAN TEMP/S	● Engine: After warming up		More than 70°C (158°F)
HO2S1 (B1)	● Engine: After warming up	Maintaining engine speed at 2,000 rpm	0 - 0.3V ←→ Approx. 0.6 - 1.0V
HO2S2 (B1)	● Warm-up condition ● After keeping engine speed between 3,500 and 4,000 rpm for 1 minute and at idle for 1 minute under no load.	Revving engine from idle to 3,000 rpm quickly.	0 - 0.3V ←→ Approx. 0.6 - 1.0V
HO2S1 MNTR (B1)	● Engine: After warming up	Maintaining engine speed at 2,000 rpm	LEAN ←→ RICH Changes more than 5 times during 10 seconds.
HO2S2 MNTR (B1)	● Engine: After warming up ● After keeping engine speed between 3,500 and 4,000 rpm for 1 minute and at idle for 1 minute under no load.	Revving engine from idle to 3,000 rpm quickly.	LEAN ←→ RICH
VEH SPEED SE	● Turn drive wheels and compare the CONSULT-II value with speedometer indication.		Almost the same speed as the speedometer indication.
BATTERY VOLT	● Ignition switch: ON (Engine stopped)		11 - 14V
ACCEL SEN 1	● Ignition switch: ON (Engine stopped)	Accelerator pedal: Fully released	0.5 - 1.0V
		Accelerator pedal: Fully depressed	4.0 - 4.7V
ACCEL SEN 2*	● Ignition switch: ON (Engine stopped)	Accelerator pedal: Fully released	0.3 - 1.2V
		Accelerator pedal: Fully depressed	3.9 - 4.8V
THRTL SEN 1 THRTL SEN 2*	● Ignition switch: ON (Engine stopped) ● Shift lever: D (A/T), 1ST (M/T)	Accelerator pedal: Fully released	More than 0.36V
		Accelerator pedal: Fully depressed	Less than 4.75V
EVAP SYS PRES	● Ignition switch: ON		1.8 - 4.8V
START SIGNAL	● Ignition switch: ON → START → ON		OFF → ON → OFF

MONITOR ITEM	CONDITION		SPECIFICATION
CLSD THL POS	● Ignition switch: ON (Engine stopped)	Accelerator pedal: Fully released	ON
		Accelerator pedal: Slightly depressed	OFF
AIR COND SIG	● Engine: After warming up, idle the engine	Air conditioner switch: OFF	OFF
		Air conditioner switch: ON (Compressor operates.)	ON
P/N POSI SW	● Ignition switch: ON	Shift lever: P or N (A/T), Neutral (M/T)	ON
		Shift lever: Except above position	OFF
PW/ST SIGNAL	● Engine: After warming up, idle the engine	Steering wheel: Not being turn. (Forward direction)	OFF
		Steering wheel: Being turned.	ON
LOAD SIGNAL	● Ignition switch: ON	Rear window defogger switch is ON and/or lighting switch is in 1st or 2nd and/or heater fan switch is ON.	ON
		Rear window defogger switch is OFF, lighting switch and heater fan switch is OFF.	OFF
SNOW MODE SW	● Ignition switch: ON	Snow mode switch: ON	ON
		Snow mode switch: OFF	OFF
IGNITION SW	● Ignition switch: ON → OFF → ON		ON → OFF → ON
HEATER FAN SW	● Engine: After warming up, idle the engine	Heater fan: Operating.	ON
		Heater fan: Not operating	OFF
BRAKE SW	● Ignition switch: ON	Brake pedal: Fully released	OFF
		Brake pedal: Slightly depressed	ON
INJ PULSE-B1	● Engine: After warming up ● Shift lever: P or N (A/T), Neutral (M/T) ● Air conditioner switch: OFF ● No-load	Idle	2.0 - 3.0 msec
		2,000 rpm	1.9 - 2.9 msec
IGN TIMING	● Engine: After warming up ● Shift lever: P or N (A/T), Neutral (M/T) ● Air conditioner switch: OFF ● No-load	Idle	13° - 17° BTDC
		2,000 rpm	25° - 45° BTDC
CAL/LD VALUE	● Engine: After warming up ● Shift lever: P or N (A/T), Neutral (M/T) ● Air conditioner switch: OFF ● No-load	Idle	10% - 35%
		2,500 rpm	10% - 35%
MASS AIRFLOW	● Engine: After warming up ● Shift lever: P or N (A/T), Neutral (M/T) ● Air conditioner switch: OFF ● No-load	Idle	1.0 - 4.0 g·m/s
		2,500 rpm	4.0 - 10.0 g·m/s
PURG VOL C/V	● Engine: After warming up ● Shift lever: P or N (A/T), Neutral (M/T) ● Air conditioner switch: OFF ● No-load	Idle	0%
		2,000 rpm	20 - 30%

MONITOR ITEM	CONDITION		SPECIFICATION
INT/V TIM (B1)	● Engine: After warming up ● Shift lever: P or N (A/T), Neutral (M/T) ● Air conditioner switch: OFF ● No-load	Idle	–5° - 5°CA
		When revving engine up to 2,000 rpm quickly.	Approx. 0° - 20°CA
INT/V SOL (B1)	● Engine: After warming up ● Shift lever: P or N (A/T), Neutral (M/T) ● Air conditioner switch: OFF ● No-load	Idle	0% - 2%
		When revving engine up to 2,000 rpm quickly.	Approx. 0% - 50%
AIR COND RLY	● Engine: After warming up, idle the engine	Air conditioner switch: OFF	OFF
		Air conditioner switch: ON (Compressor operates)	ON
VIAS S/V	● Engine: After warming up	Idle	OFF
		More than 5,000 rpm	ON
FUEL PUMP RLY	● For 1 second after turning ignition switch ON ● Engine running or cranking		ON
	● Except above conditions		OFF
VENT CONT/V	● Ignition switch: ON		OFF
THRTL RELAY	● Ignition switch: ON		ON
COOLING FAN	● Engine: After warming up, idle the engine ● Air conditioner switch: OFF	Engine coolant temperature is 94°C (201°F) or less	OFF
		Engine coolant temperature is between 95°C (203°F) and 99°C (210°F)	LOW
		Engine coolant temperature is 100°C (212°F) or more	HIGH
HO2S1 HTR (B1)	● Engine: After warming up ● Engine speed: Below 3,600 rpm		ON
	● Engine speed: Above 3,600 rpm		OFF
HO2S2 HTR (B1)	● Engine speed: Below 3,600 rpm after the following conditions are met ● Engine: After warming up ● Keeping the engine speed between 3,500 and 4,000 rpm for 1 minute and at idle for 1 minute under no load.		ON
	● Engine speed: Above 3,600 rpm		OFF
TRVL AFTER MIL	● Ignition switch: ON	Vehicle has traveled after MIL has turned ON.	0 - 65,535 km (0 - 40,723 mile)
O2SEN HTR DTY	● Engine coolant temperature when engine started: More than 80°C (176°F) ● Engine speed: Below 3,600 rpm		Approx. 50%
AC PRESS SEN	● Ignition switch: ON (Engine stopped)		Approx. 0V
	● Engine: Idle ● Air conditioner switch: OFF		1.0 - 4.0V
VEH SPEED SE	● Turn drive wheels and compare the CONSULT-II value with speedometer indication.		Almost the same speed as the speedometer indication
SET VHCL SPD	● Engine: Running	ASCD: Operating	The preset vehicle speed is displayed.
MAIN SW	● Ignition switch: ON	MAIN (CRUISE) switch: Pressed	ON
		MAIN (CRUISE) switch: Released	OFF
CANCEL SW	● Ignition switch: ON	CANCEL switch: Pressed	ON
		CANCEL switch: Released	OFF

MONITOR ITEM	CONDITION		SPECIFICATION
RESUME/ACC SW	● Ignition switch: ON	RESUME/ACCEL switch: Pressed	ON
		RESUME/ACCEL switch: Released	OFF
SET SW	● Ignition switch: ON	SET/COAST switch: Pressed	ON
		SET/COAST switch: Released	OFF
BRAKE SW1 (ASCD brake switch)	● Ignition switch: ON	● Brake pedal: Fully released (A/T) ● Brake pedal and clutch pedal: Fully released (M/T)	ON
		● Brake pedal: Slightly depressed (A/T) ● Brake pedal and/or clutch pedal: Fully depressed (M/T)	OFF
BRAKE SW2 (STOP lamp switch)	● Ignition switch: ON	Brake pedal: Fully released	OFF
		Brake pedal: Slightly depressed	ON
CRUISE LAMP	● Ignition switch: ON	CRUISE switch is pressed at 1st time → 2nd time	ON → OFF
SET LAMP	● CRUISE switch: ON ● When vehicle is between 40 km/h (25 MPH) and 144 km/h (89 MPH)	ASCD: Operating	ON
		ASCD: Not operating	OFF

*: Accelerator pedal position sensor 2 signal and throttle position sensor 2 signal are converted by ECM internally. Thus, they differ from ECM terminals voltage signal.

Major Sensor Reference Graph in Data Monitor Mode

ABS00CLP

The following are the major sensor reference graphs in “DATA MONITOR” mode.

CLSD THL POS, ACCEL SEN 1, THRTL SEN 1

Below is the data for “CLSD THL POS”, “ACCEL SEN 1” and “THRTL SEN 1” when depressing the accelerator pedal with the ignition switch ON and with shift lever in D position (A/T), 1st position (M/T).
The signal of “ACCEL SEN 1” and “THRTL SEN 1” should rise gradually without any intermittent drop or rise after “CLSD THL POS” is changed from ON to OFF.

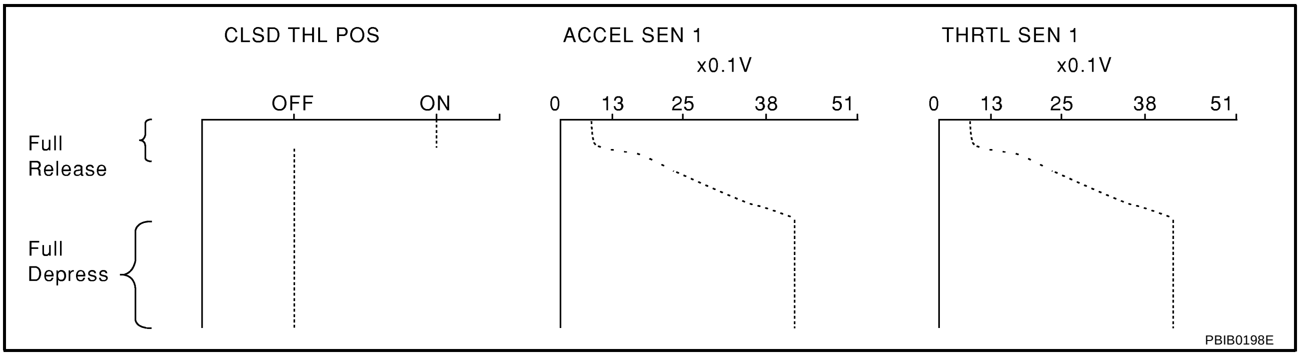

PBIB0198E

ENG SPEED, MAS A/F SE-B1, THRTL SEN 1, HO2S1 (B1), HO2S2 (B1), INJ PULSE-B1

Below is the data for “ENG SPEED”, “MAS A/F SE-B1”, “THRTL SEN 1”, “HO2S2 (B1)” and “INJ PULSE-B1” when revving engine quickly up to 4,800 rpm under no load after warming up engine sufficiently.
Each value is for reference, the exact value may vary.

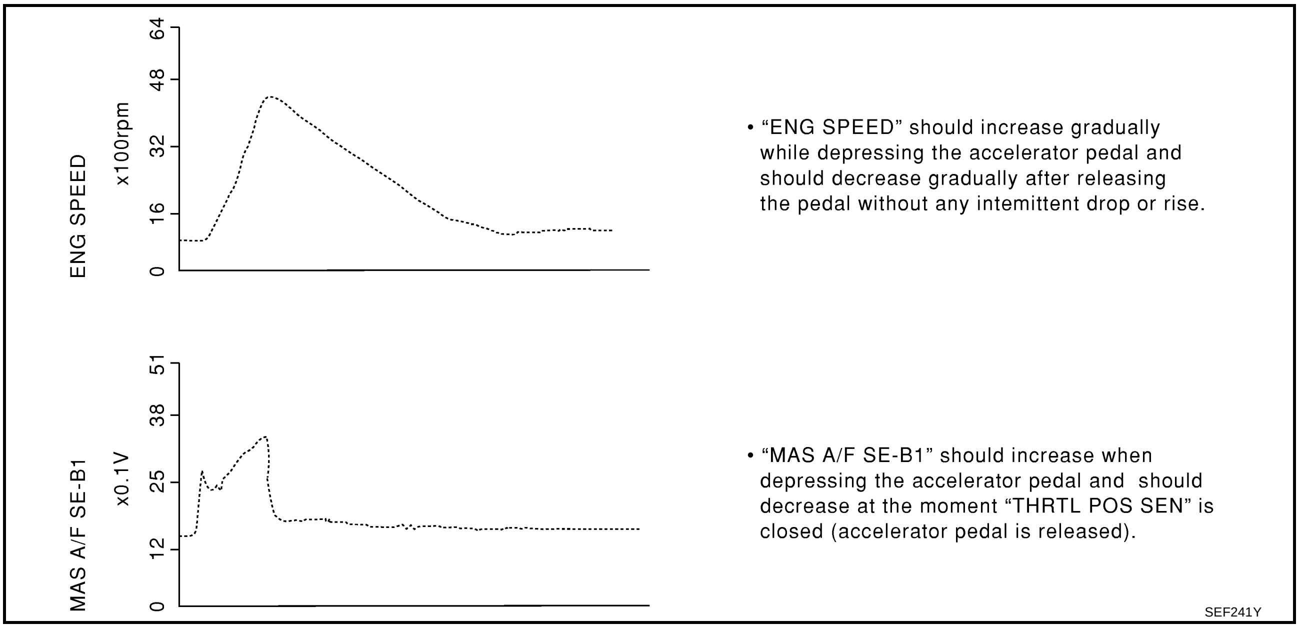

SEF241Y

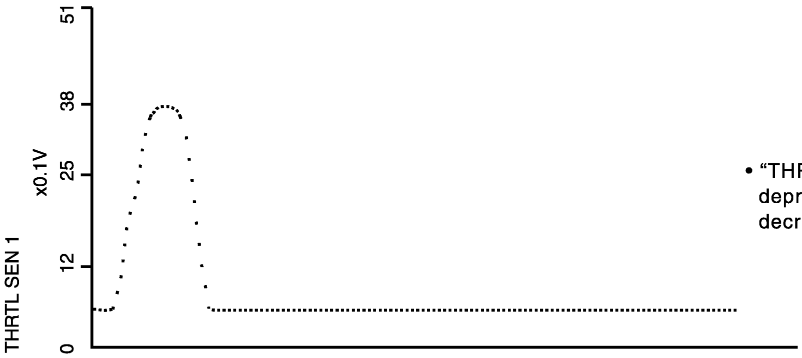

- "THRTL SEN 1" should increase while depressing the accelerator pedal and should decrease while releasing it.

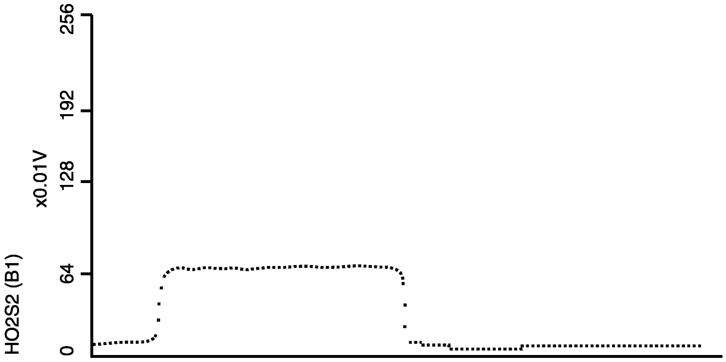

- "HO2S2 (B1)" may increase immediately after depressing the accelerator pedal and may decrease after releasing the pedal.

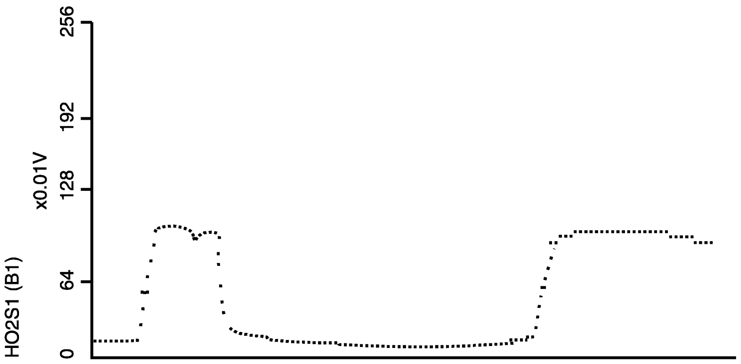

- "HO2S1 (B1)" may increase immediately after depressing the accelerator pedal and may decrease after releasing the pedal.

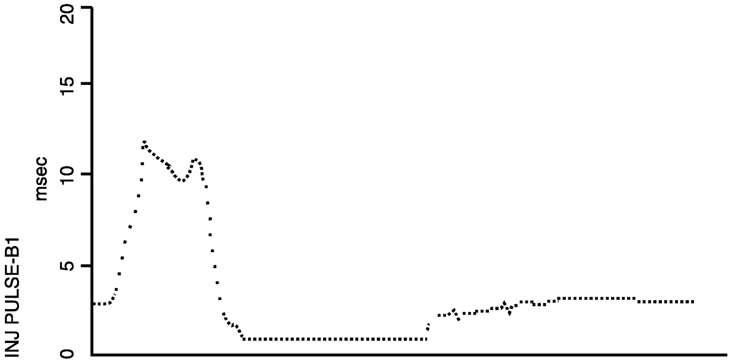

- "INJ PULSE-B1" should increase when depressing the accelerator pedal and should decrease when the pedal is released.

PBIB0668E

TROUBLE DIAGNOSIS - SPECIFICATION VALUE

PFP:00031

Description

ABS00CLQ

The specification (SP) value indicates the tolerance of the value that is displayed in “DATA MONITOR (SPEC)” mode of CONSULT-II during normal operation of the Engine Control System. When the value in “DATA MONITOR (SPEC)” mode is within the SP value, the Engine Control System is confirmed OK. When the value in “DATA MONITOR (SPEC)” mode is NOT within the SP value, the Engine Control System may have one or more malfunctions.
The SP value is used to detect malfunctions that may affect the Engine Control System, but will not light the MIL.
The SP value will be displayed for the following three items:

- B/FUEL SCHDL (The fuel injection pulse width programmed into ECM prior to any learned on board correction)
- A/F ALPHA-B1 (The mean value of air-fuel ratio feedback correction factor per cycle)
- MAS A/F SE-B1 (The signal voltage of the mass air flow sensor)

Testing Condition

ABS00CLR

- Vehicle driven distance: More than 5,000 km (3,017 miles)
- Barometric pressure: 98.3 - 104.3 kPa (1.003 - 1.064 kg/cm^2 , 14.25 - 15.12 psi)
- Atmospheric temperature: 20 - 30°C (68 - 86°F)
- Engine coolant temperature: 75 - 95°C (167 - 203°F)
- Transmission: Warmed-up*1
- Electrical load: Not applied*2
- Engine speed: Idle

*1: For A/T models, after the engine is warmed up to normal operating temperature, drive vehicle until “FLUID TEMP SE” (A/T fluid temperature sensor signal) indicates more than 60°C (140°F).
For M/T models, after the engine is warmed up to normal operating temperature, drive vehicle for 5 minutes.
*2: Rear window defogger switch, air conditioner switch, lighting switch are OFF. Steering wheel is straight ahead.

Inspection Procedure

ABS00CLS

NOTE:
Perform “DATA MONITOR (SPEC)” mode in maximum scale display.

1. Perform EC-70, "Basic Inspection" .
2. Confirm that the testing conditions indicated above are met.
3. Select “B/FUEL SCHDL”, “A/F ALPHA-B1” and “MAS A/F SE-B1” in “DATA MONITOR (SPEC)” mode with CONSULT-II.
4. Make sure that monitor items are within the SP value.
5. If NG, go to EC-144, "Diagnostic Procedure" .

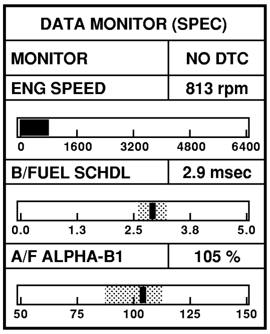

SEF601Z

Diagnostic Procedure

ABS00CLT

OVERALL SEQUENCE

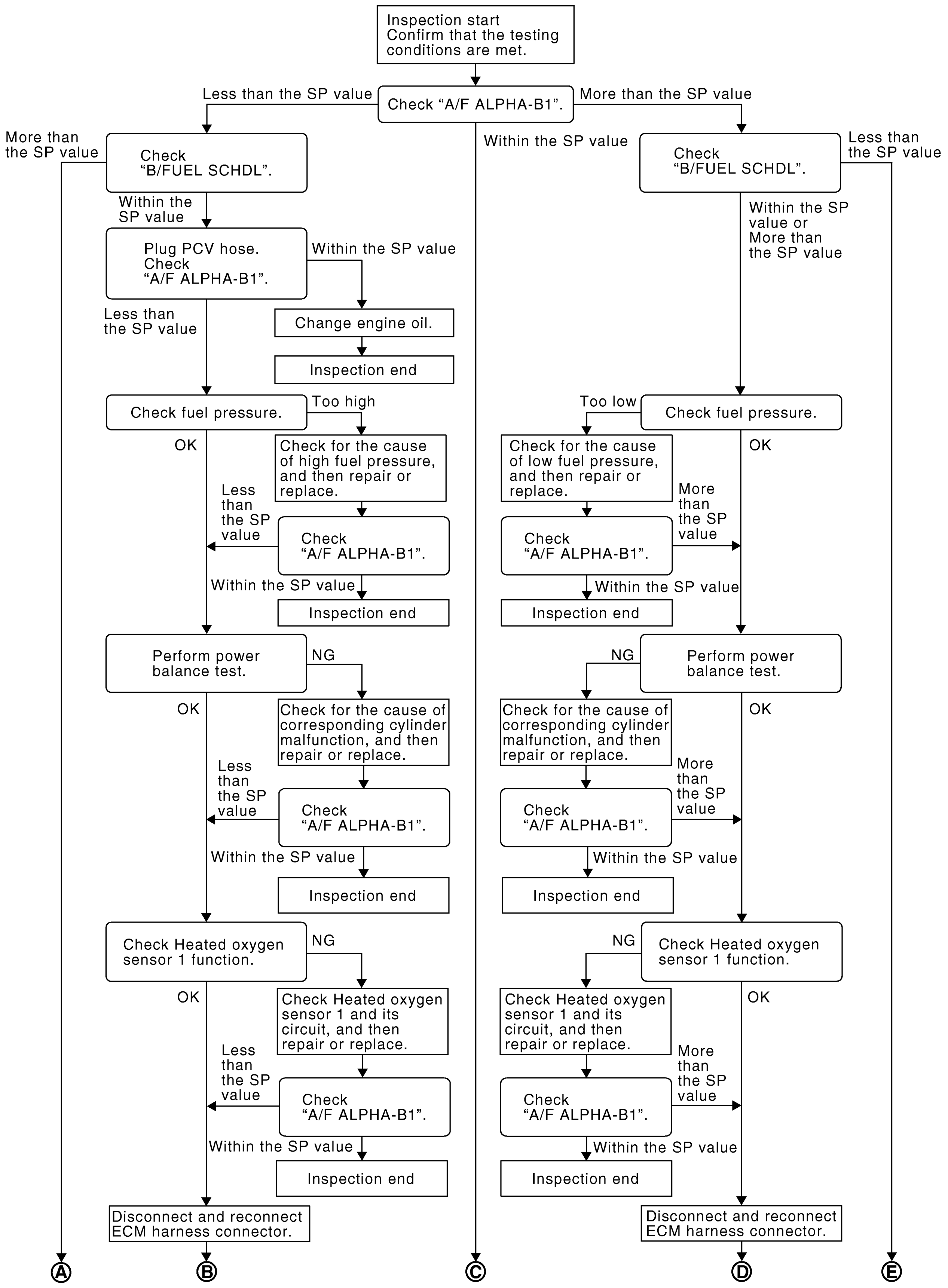

PBIB2384E

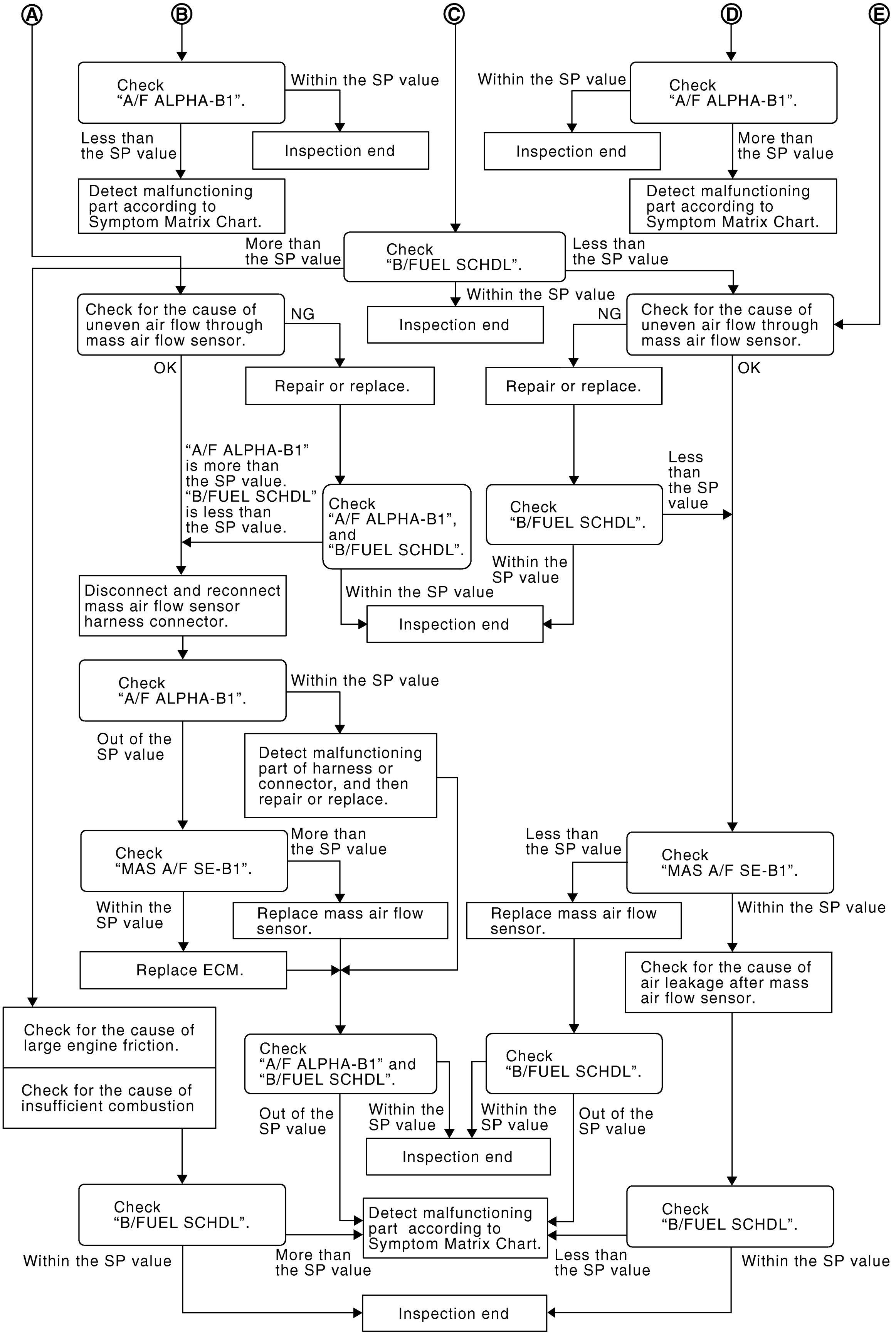
A
B
C
D
E
Check "A/F ALPHA-B1".
Within the SP value
Inspection end
Less than the SP value
Detect malfunctioning part according to Symptom Matrix Chart.
Within the SP value
Check "A/F ALPHA-B1".
Inspection end
More than the SP value
Detect malfunctioning part according to Symptom Matrix Chart.
More than the SP value
Check "B/FUEL SCHDL".
Less than the SP value
Within the SP value
Inspection end
Check for the cause of uneven air flow through mass air flow sensor.
NG
OK
Repair or replace.
NG
Check for the cause of uneven air flow through mass air flow sensor.
OK
Repair or replace.
"A/F ALPHA-B1" is more than the SP value. "B/FUEL SCHDL" is less than the SP value.
Check "A/F ALPHA-B1", and "B/FUEL SCHDL".
Check "B/FUEL SCHDL".
Less than the SP value
Within the SP value
Within the SP value
Inspection end
Disconnect and reconnect mass air flow sensor harness connector.
Check "A/F ALPHA-B1".
Within the SP value
Detect malfunctioning part of harness or connector, and then repair or replace.
Out of the SP value
Check "MAS A/F SE-B1".
More than the SP value
Replace mass air flow sensor.
Within the SP value
Replace ECM.
Less than the SP value
Check "MAS A/F SE-B1".
Replace mass air flow sensor.
Within the SP value
Check for the cause of air leakage after mass air flow sensor.
Check for the cause of large engine friction.
Check for the cause of insufficient combustion
Check "A/F ALPHA-B1" and "B/FUEL SCHDL".
Out of the SP value
Within the SP value
Check "B/FUEL SCHDL".
Within the SP value
Out of the SP value
Inspection end
Check "B/FUEL SCHDL".
Detect malfunctioning part according to Symptom Matrix Chart.
Check "B/FUEL SCHDL".
Within the SP value
More than the SP value
Less than the SP value
Within the SP value
Inspection end

PBIB2509E

DETAILED PROCEDURE

1. CHECK “A/F ALPHA-B1”

1. Start engine.
2. Confirm that the testing conditions are met. Refer to EC-143, "Testing Condition" .
3. Select “A/F ALPHA-B1” in “DATA MONITOR (SPEC)” mode, and make sure that the indication is within the SP value.

   NOTE:
   Check “A/F ALPHA-B1” for approximately 1 minute because they may fluctuate. It is NG if the indication is out of the SP value even a little.

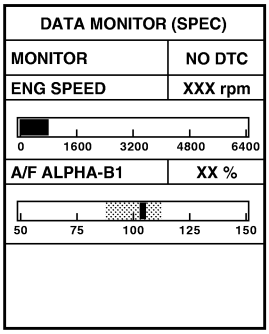

PBIB2369E

OK or NG

OK >> GO TO 17.
NG (Less than the SP value)>>GO TO 2.
NG (More than the SP value)>>GO TO 3.

2. CHECK “B/FUEL SCHDL”

Select “B/FUEL SCHDL” in “DATA MONITOR (SPEC)” mode, and make sure that the indication is within the SP value.

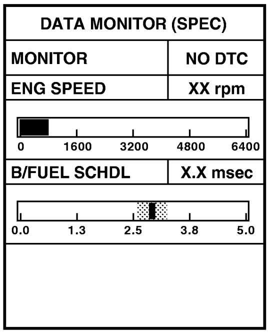

PBIB2332E

OK or NG

OK >> GO TO 4.
NG (More than the SP value)>>GO TO 19.

3. CHECK “B/FUEL SCHDL”

Select “B/FUEL SCHDL” in “DATA MONITOR (SPEC)” mode, and make sure that the indication is within the SP value.

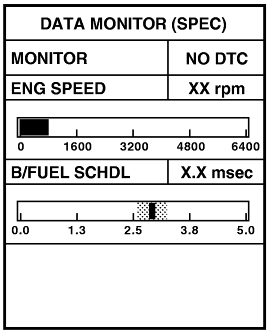

PBIB2332E

OK or NG

OK >> GO TO 6.
NG (More than the SP value)>>GO TO 6.
NG (Less than the SP value)>>GO TO 25.

4. CHECK “A/F ALPHA-B1”

1. Stop the engine.
2. Disconnect PCV hose, and then plug it.
3. Start engine.
4. Select “A/F ALPHA-B1” in “DATA MONITOR (SPEC)” mode, and make sure that the indication is within the SP value.

OK or NG

OK >> GO TO 5.
NG >> GO TO 6.

5. CHANGE ENGINE OIL

1. Stop the engine.
2. Change engine oil.
   NOTE:
   This symptom may occur when a large amount of gasoline is mixed with engine oil because of driving conditions (such as when engine oil temperature does not rise enough since a journey distance is too short during winter). The symptom will not be detected after changing engine oil or changing driving condition.

>> **INSPECTION END**

6. CHECK FUEL PRESSURE

Check fuel pressure. (Refer to EC-90, "Fuel Pressure Check" .)

OK or NG

OK >> GO TO 9.
NG (Fuel pressure is too high)>>Replace fuel pressure regulator, refer to EC-90 . GO TO 8.
NG (Fuel pressure is too low)>>GO TO 7.

7. DETECT MALFUNCTIONING PART

1. Check the following.
- Clogged and bent fuel hose and fuel tube
- Clogged fuel filter
- Fuel pump and its circuit (Refer to EC-613 .)
2. If NG, repair or replace the malfunctioning part. (Refer to EC-90 .)
   If OK, replace fuel pressure regulator.

>> GO TO 8.

8. CHECK "A/F ALPHA-B1"

1. Start engine.
2. Select "A/F ALPHA-B1" in "DATA MONITOR (SPEC)" mode, and make sure that the indication is within the SP value.

OK or NG

OK >> **INSPECTION END**
NG >> GO TO 9.

9. PERFORM POWER BALANCE TEST

1. Perform "POWER BALANCE" in "ACTIVE TEST" mode.
2. Make sure that the each cylinder produces a momentary engine speed drop.

OK or NG

OK >> GO TO 12.
NG >> GO TO 10.

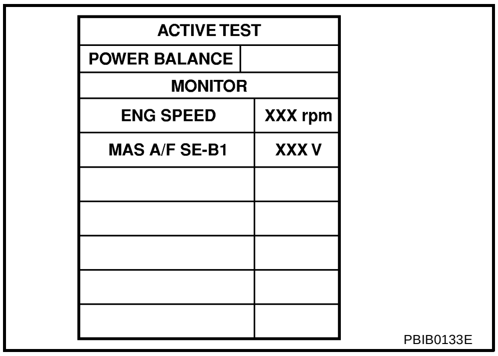

10. DETECT MALFUNCTIONING PART

1. Check the following.
– Ignition coil and its circuit (Refer to EC-586 .)
– Fuel injector and its circuit (Refer to EC-607 .)
– Intake air leakage
– Low compression pressure (Refer to EM-62 .)
2. If NG, repair or replace the malfunctioning part.
If OK, replace fuel injector. (It may be caused by leakage from fuel injector or clogging.)

>> GO TO 11.

11. CHECK “A/F ALPHA-B1”

1. Start engine.
2. Select “A/F ALPHA-B1” in “DATA MONITOR (SPEC)” mode, and make sure that the indication is within the SP value.

OK or NG

OK >> **INSPECTION END**
NG >> GO TO 12.

12. CHECK HEATED OXYGEN SENSOR 1 FUNCTION

1. Run engine at about 2,000 rpm for about 2 minutes under no-load.
2. Select “HO2S1 MNTR (B1)”, in “DATA MONITOR” mode.
3. Running engine at 2,000 rpm under no-load (The engine is warmed up to normal operating temperature.), check that the monitor fluctuates between LEAN and RICH more than 5 times during 10 seconds.

1 time : RICH → LEAN → RICH
2 times : RICH → LEAN → RICH → LEAN → RICH

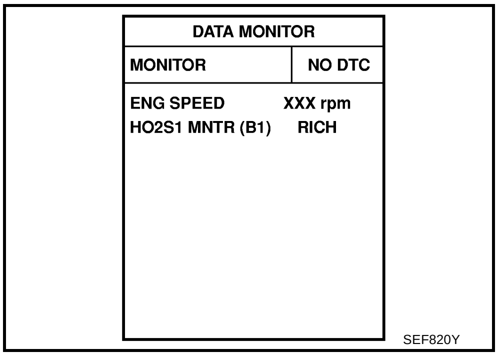

SEF820Y

OK or NG

OK >> GO TO 15.
NG >> GO TO 13.

13. CHECK HEATED OXYGEN SENSOR 1 CIRCUIT

Check heated oxygen sensor 1 and its circuit. Refer to EC-226

>> GO TO 14.

14. CHECK “A/F ALPHA-B1”

1. Start engine.
2. Select “A/F ALPHA-B1” in “DATA MONITOR (SPEC)” mode, and make sure that the indication is within the SP value.

OK or NG

OK >> **INSPECTION END**
NG >> GO TO 15.

15. DISCONNECT AND RECONNECT ECM HARNESS CONNECTOR

1. Stop the engine.
2. Disconnect ECM harness connector. Check pin terminal and connector for damage, and then reconnect it.

>> GO TO 16.

16. CHECK “A/F ALPHA-B1”

1. Start engine.
2. Select “A/F ALPHA-B1” in “DATA MONITOR (SPEC)” mode, and make sure that the indication is within the SP value.

OK or NG

OK >> **INSPECTION END**
NG >> Detect malfunctioning part according to EC-103, "Symptom Matrix Chart" .

17. CHECK “B/FUEL SCHDL”

Select “B/FUEL SCHDL” in “DATA MONITOR (SPEC)” mode, and make sure that the indication is within the SP value.

OK or NG

OK >> **INSPECTION END**
NG (More than the SP value)>>GO TO 18.
NG (Less than the SP value)>>GO TO 25.

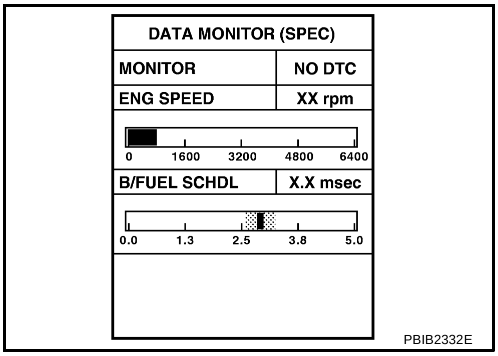

PBIB2332E

18. DETECT MALFUNCTIONING PART

1. Check for the cause of large engine friction. Refer to the following.
   - Engine oil level is too high
   - Engine oil viscosity
   - Belt tension of power steering, alternator, A/C compressor, etc. is excessive
   - Noise from engine
   - Noise from transmission, etc.
2. Check for the cause of insufficient combustion. Refer to the following.
   - Valve clearance malfunction
   - Intake valve timing control function malfunction
   - Camshaft sprocket installation malfunction, etc.

>> Repair or replace malfunctioning part, and then GO TO 30.

19. CHECK INTAKE SYSTEM

Check for the cause of uneven air flow through mass air flow sensor. Refer to the following.

- Crushed air ducts
- Malfunctioning seal of air cleaner element
- Uneven dirt of air cleaner element
- Improper specification of intake air system

OK or NG

OK >> GO TO 21.
NG >> Repair or replace malfunctioning part, and then GO TO 20.

20. CHECK “A/F ALPHA-B1”, AND “B/FUEL SCHDL”

Select “A/F ALPHA-B1” and “B/FUEL SCHDL” in “DATA MONITOR (SPEC)” mode, and make sure that the indication is within the SP value.

OK or NG

OK >> **INSPECTION END**
NG (“B/FUEL SCHDL” is more, “A/F ALPHA-B1” is less than the SP value)>>GO TO 21.

21. DISCONNECT AND RECONNECT MASS AIR FLOW SENSOR HARNESS CONNECTOR

1. Stop the engine.
2. Disconnect mass air flow sensor harness connector. Check pin terminal and connector for damage and then reconnect it again.

>> GO TO 22.

22. CHECK “A/F ALPHA-B1”

1. Start engine.
2. Select “A/F ALPHA-B1” in “DATA MONITOR (SPEC)” mode, and make sure that the indication is within the SP value.

OK or NG

OK >> 1. Detect malfunctioning part of mass air flow sensor circuit and repair it. Refer to EC-190 .
2. GO TO 29.

NG >> GO TO 23.

23. CHECK “MAS A/F SE-B1”

Select “MAS A/F SE-B1” in “DATA MONITOR (SPEC)” mode, and make sure that the indication is within the SP value.

OK or NG

OK >> GO TO 24.
NG (More than the SP value)>>Replace mass air flow sensor, and then GO TO 29.

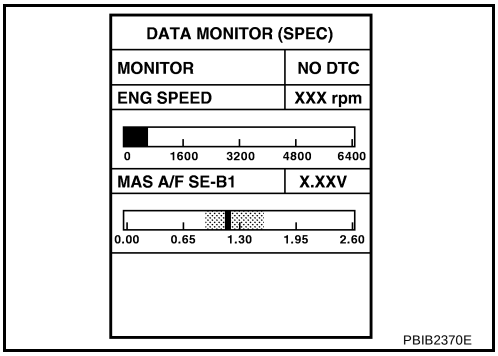

24. REPLACE ECM

1. Replace ECM.
2. Perform initialization of NVIS (NATS) system and registration of all NVIS (NATS) ignition key IDs. Refer to BL-99, "ECM Re-communicating Function" .
3. Perform EC-87, "VIN Registration" .
4. Perform EC-88, "Accelerator Pedal Released Position Learning" .
5. Perform EC-88, "Throttle Valve Closed Position Learning" .
6. Perform EC-88, "Idle Air Volume Learning" .

>> GO TO 29.

25. CHECK INTAKE SYSTEM

Check for the cause of uneven air flow through mass air flow sensor. Refer to the following.

- Crushed air ducts
- Malfunctioning seal of air cleaner element
- Uneven dirt of air cleaner element
- Improper specification of intake air system

OK or NG

OK >> GO TO 27.
NG >> Repair or replace malfunctioning part, and then GO TO 26.

26. CHECK "B/FUEL SCHDL"

Select "B/FUEL SCHDL" in "DATA MONITOR (SPEC)" mode, and make sure that the indication is within the SP value.

OK or NG

OK >> **INSPECTION END**
NG (Less than the SP value)>>GO TO 27.

27. CHECK "MAS A/F SE-B1"

Select "MAS A/F SE-B1" in "DATA MONITOR (SPEC)" mode, and make sure that the indication is within the SP value.

OK or NG

OK >> GO TO 28.
NG (Less than the SP value)>>Replace mass air flow sensor, and then GO TO 30.

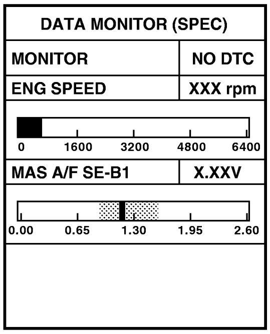

PBIB2370E

28. CHECK INTAKE SYSTEM

Check for the cause of air leak after the mass air flow sensor. Refer to the following.

- Disconnection, looseness, and cracks in air duct
- Looseness of oil filler cap
- Disconnection of oil level gauge
- Open stuck, breakage, hose disconnection, or cracks of PCV valve
- Disconnection or cracks of EVAP purge hose, open stuck of EVAP canister purge volume control solenoid valve
- Malfunctioning seal of rocker cover gasket
- Disconnection, looseness, or cracks of hoses, such as vacuum hose, connecting to intake air system parts
- Malfunctioning seal of intake air system, etc.

>> GO TO 30.

29. CHECK "A/F ALPHA-B1" AND "B/FUEL SCHDL"

Select "A/F ALPHA-B1" and "B/FUEL SCHDL" in "DATA MONITOR (SPEC)" mode, and make sure that the indication is within the SP value.

OK or NG

OK >> **INSPECTION END**
NG >> Detect malfunctioning part according to EC-103, "Symptom Matrix Chart" .

30. CHECK “B/FUEL SCHDL”

Select “B/FUEL SCHDL” in “DATA MONITOR (SPEC)” mode, and then make sure that the indication is within the SP value.

OK or NG

OK >> **INSPECTION END**
NG >> Detect malfunctioning part according to EC-103, "Symptom Matrix Chart" .

TROUBLE DIAGNOSIS FOR INTERMITTENT INCIDENT

PFP:00006

Description

ABS00CLU

Intermittent incidents may occur. In many cases, the malfunction resolves itself (the part or circuit function returns to normal without intervention). It is important to realize that the symptoms described in the customer's complaint often do not recur on (1st trip) DTC visits. Realize also that the most frequent cause of I/I occurrences is poor electrical connections. Because of this, the conditions under which the incident occurred may not be clear. Therefore, circuit checks made as part of the standard diagnostic procedure may not indicate the specific malfunctioning area.

Common intermittent incidents Report Situations

STEP in Work Flow	Situation
2	The CONSULT-II is used. The SELF-DIAG RESULTS screen shows time data other than [0] or [1t].
3 or 4	The symptom described by the customer does not recur.
5	(1st trip) DTC does not appear during the DTC Confirmation Procedure.
10	The Diagnostic Procedure for PXXXX does not indicate the malfunctioning area.

Diagnostic Procedure

ABS00CLV

1. INSPECTION START

Erase (1st trip) DTCs. Refer to EC-59, "HOW TO ERASE EMISSION-RELATED DIAGNOSTIC INFORMATION" .

>> GO TO 2.

2. CHECK GROUND TERMINALS

Check ground terminals for corroding or loose connection.
Refer to EC-161, "Ground Inspection" .

OK or NG

OK >> GO TO 3.
NG >> Repair or replace.

3. SEARCH FOR ELECTRICAL INCIDENT

Perform GI-26, "How to Perform Efficient Diagnosis for an Electrical Incident" , “INCIDENT SIMULATION TESTS”.

OK or NG

OK >> GO TO 4.
NG >> Repair or replace.

4. CHECK CONNECTOR TERMINALS

Refer to GI-23, "How to Check Terminal" , “HOW TO PROBE CONNECTORS”, “How to Check Enlarged Contact Spring of Terminal”.

OK or NG

OK >> **INSPECTION END**
NG >> Repair or replace connector.

POWER SUPPLY AND GROUND CIRCUIT

PFP:24110

Wiring Diagram

ABS00CLW

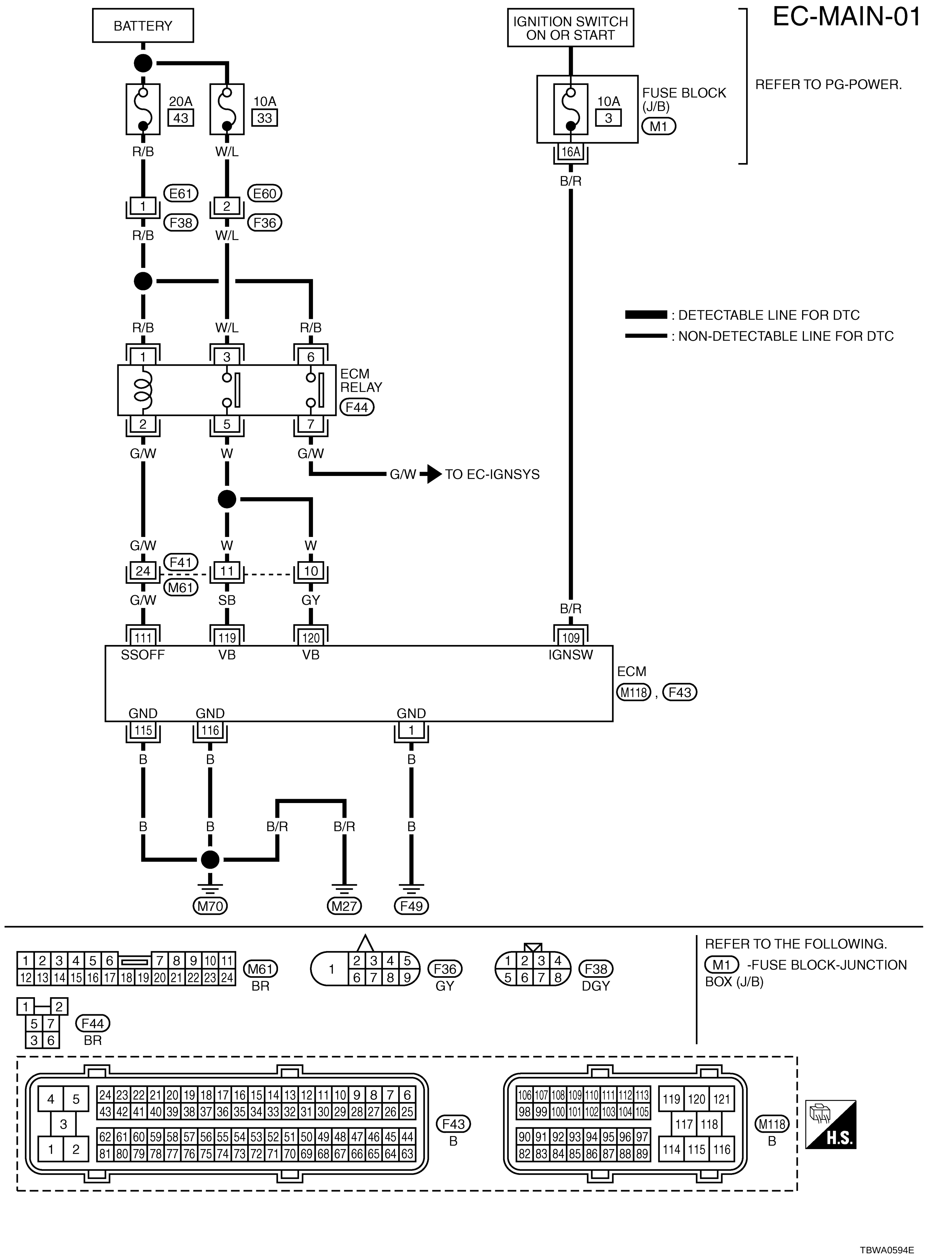

Specification data are reference values and are measured between each terminal and ground.

CAUTION:

Do not use ECM ground terminals when measuring input/output voltage. Doing so may result in damage to the ECM's transistor. Use a ground other than ECM terminals, such as the ground.

TER-MINAL NO.	WIRE COLOR	ITEM	CONDITION	DATA (DC Voltage)
1	B	ECM ground	**[Engine is running]** ● Idle speed	Body ground
109	B/R	Ignition switch	**[Ignition switch: OFF]**	0V
			[Ignition switch: ON]	BATTERY VOLTAGE (11 - 14V)
111	G/W	ECM relay (Self shut-off)	**[Engine is running]** **[Ignition switch: OFF]** ● A few seconds after turning ignition switch OFF	0 - 1.0V
			[Ignition switch: OFF] ● More than a few seconds after turning ignition switch OFF	BATTERY VOLTAGE (11 - 14V)
115 116	B B	ECM ground	**[Engine is running]** ● Idle speed	Body ground
119 120	SB GY	Power supply for ECM	**[Ignition switch: ON]**	BATTERY VOLTAGE (11 - 14V)

Diagnostic Procedure

ABS00D81

1. INSPECTION START

Start engine.

Is engine running?

Yes or No

Yes >> GO TO 11.
No >> GO TO 2.

2. CHECK ECM POWER SUPPLY CIRCUIT-I

1. Turn ignition switch OFF and then ON.
2. Check voltage between ECM terminal 109 and ground with CONSULT-II or tester.

Voltage: Battery voltage

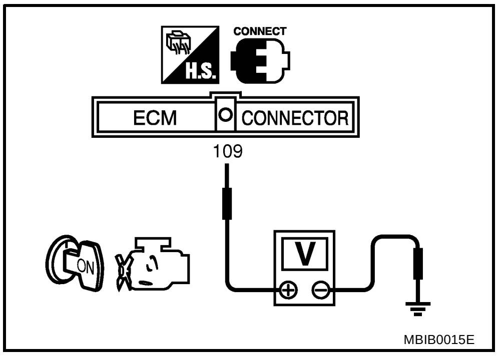

OK or NG

OK >> GO TO 4.
NG >> GO TO 3.

3. DETECT MALFUNCTIONING PART

Check the following.

- Fuse block (J/B) connector M1
- 10A fuse
- Harness for open or short between ECM and fuse

>> Repair open circuit or short to ground or short to power in harness or connectors.

4. CHECK GROUND CONNECTIONS

1. Turn ignition switch OFF.
2. Loosen and retighten three ground screws on the body.
   Refer to EC-161, "Ground Inspection" .

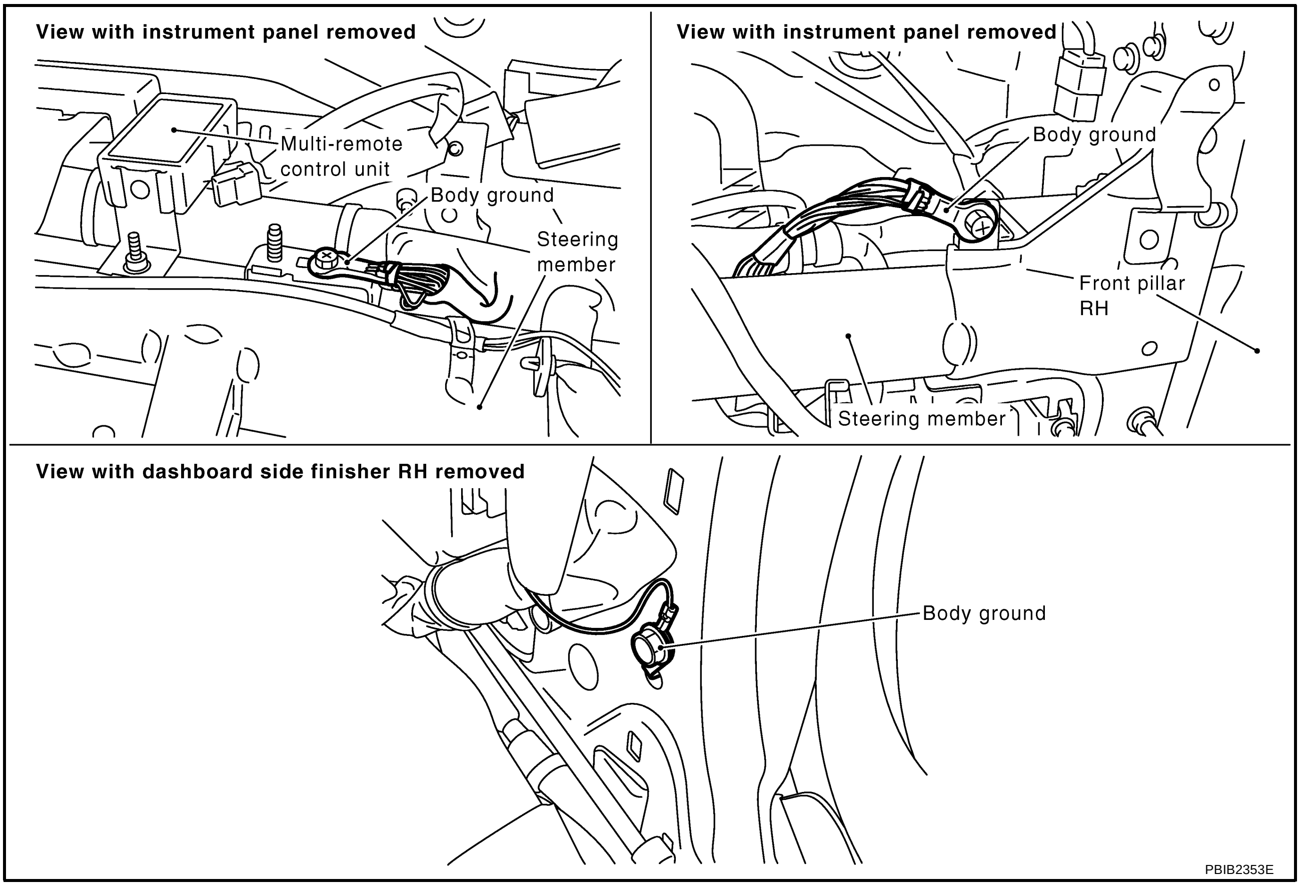

OK or NG

OK >> GO TO 5.
NG >> Repair or replace ground connections.

5. CHECK ECM GROUND CIRCUIT FOR OPEN AND SHORT-I

1. Disconnect ECM harness connector.
2. Check harness continuity between ECM terminals 1, 115, 116 and ground.
   Refer to Wiring Diagram.

   Continuity should exist.

3. Also check harness for short to power.

OK or NG

OK >> GO TO 6.
NG >> Repair open circuit or short to power in harness or connectors.

6. CHECK ECM POWER SUPPLY CIRCUIT-II

1. Disconnect ECM relay.

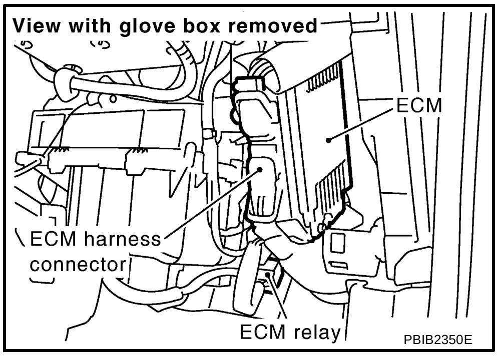

2. Check voltage between ECM relay terminals 1, 6 and ground with CONSULT-II or tester.

Voltage: Battery voltage

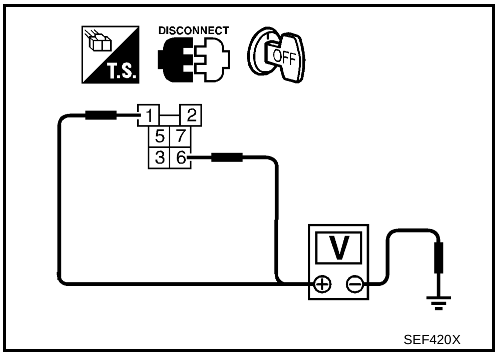

OK or NG

OK >> GO TO 8.
NG >> GO TO 7.

7. DETECT MALFUNCTIONING PART

Check the following.

- Harness connectors E61, F38
- 20A fuse
- Harness for open or short between ECM relay and battery

>> Repair open circuit or short to ground or short to power in harness or connectors.

8. CHECK OUTPUT SIGNAL CIRCUIT FOR OPEN AND SHORT

1. Check harness continuity between ECM terminal 111 and ECM relay terminal 2.
Refer to Wiring Diagram.

Continuity should exist.

2. Also check harness for short to ground and short to power.

OK or NG

OK >> GO TO 10.
NG >> GO TO 9.

9. DETECT MALFUNCTIONING PART

Check the following.

- Harness connectors F41, M61
- Harness for open or short between ECM relay and ECM

>> Repair open circuit or short to ground or short to power in harness or connectors.

10. CHECK ECM RELAY

Refer to EC-161, "Component Inspection" .

OK or NG

OK >> Go to EC-586, "IGNITION SIGNAL" .
NG >> Replace ECM relay.

11. CHECK ECM POWER SUPPLY CIRCUIT-III

1. Stop engine and wait at least 10 seconds.
2. Turn ignition switch ON and then OFF.
3. Check voltage between ECM terminals 119, 120 and ground with CONSULT-II or tester.

Voltage: After turning ignition switch OFF, battery voltage will exist for a few seconds, then drop approximately 0V.

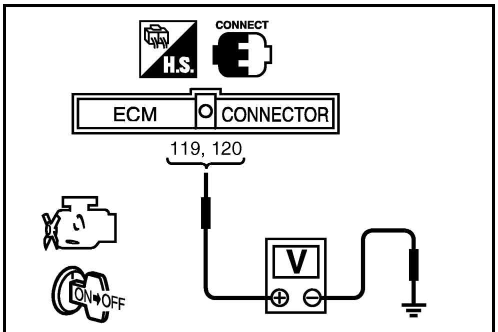

PBIB1630E

OK or NG

OK >> GO TO 17.
NG (Battery voltage does not exist.)>>GO TO 12.
NG (Battery voltage exists for more than a few seconds.)>>GO TO 14.

12. CHECK ECM POWER SUPPLY CIRCUIT-IV

1. Disconnect ECM relay.

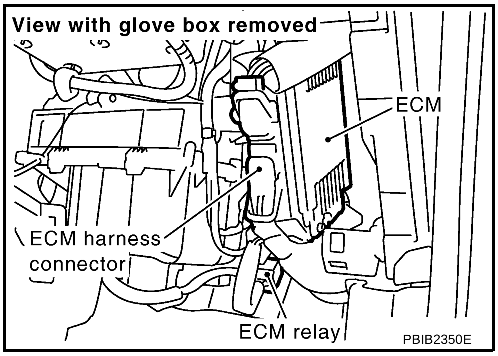

PBIB2350E

2. Check voltage between ECM relay terminal 3 and ground with CONSULT-II or tester.

Voltage: Battery voltage

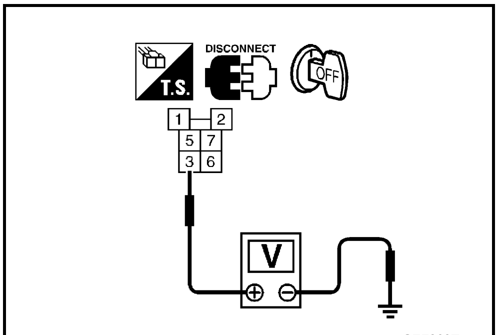

SEF860T

OK or NG

OK >> GO TO 14.
NG >> GO TO 13.

13. DETECT MALFUNCTIONING PART

Check the following.

- Harness connectors E60, F36
- 10A fuse
- Harness for open or short between ECM relay and battery

>> Repair open circuit or short to ground or short to power in harness or connectors.

14. CHECK ECM POWER SUPPLY CIRCUIT-V

1. Disconnect ECM harness connector.
2. Check harness continuity between ECM terminals 119, 120 and ECM relay terminal 5.
   Refer to Wiring Diagram.

   Continuity should exist.

3. Also check harness for short to ground and short to power.

OK or NG

OK >> GO TO 16.
NG >> GO TO 15.

15. DETECT MALFUNCTIONING PART

Check the following.

- Harness connectors F41, M61
- Harness for open or short between ECM relay and ECM

>> Repair open circuit or short to ground or short to power in harness or connectors.

16. CHECK ECM RELAY

Refer to EC-161, "Component Inspection" .

OK or NG

OK >> GO TO 17.
NG >> Replace ECM relay.

17. CHECK GROUND CONNECTIONS

Loosen and retighten three ground screws on the body.
Refer to EC-161, "Ground Inspection" .

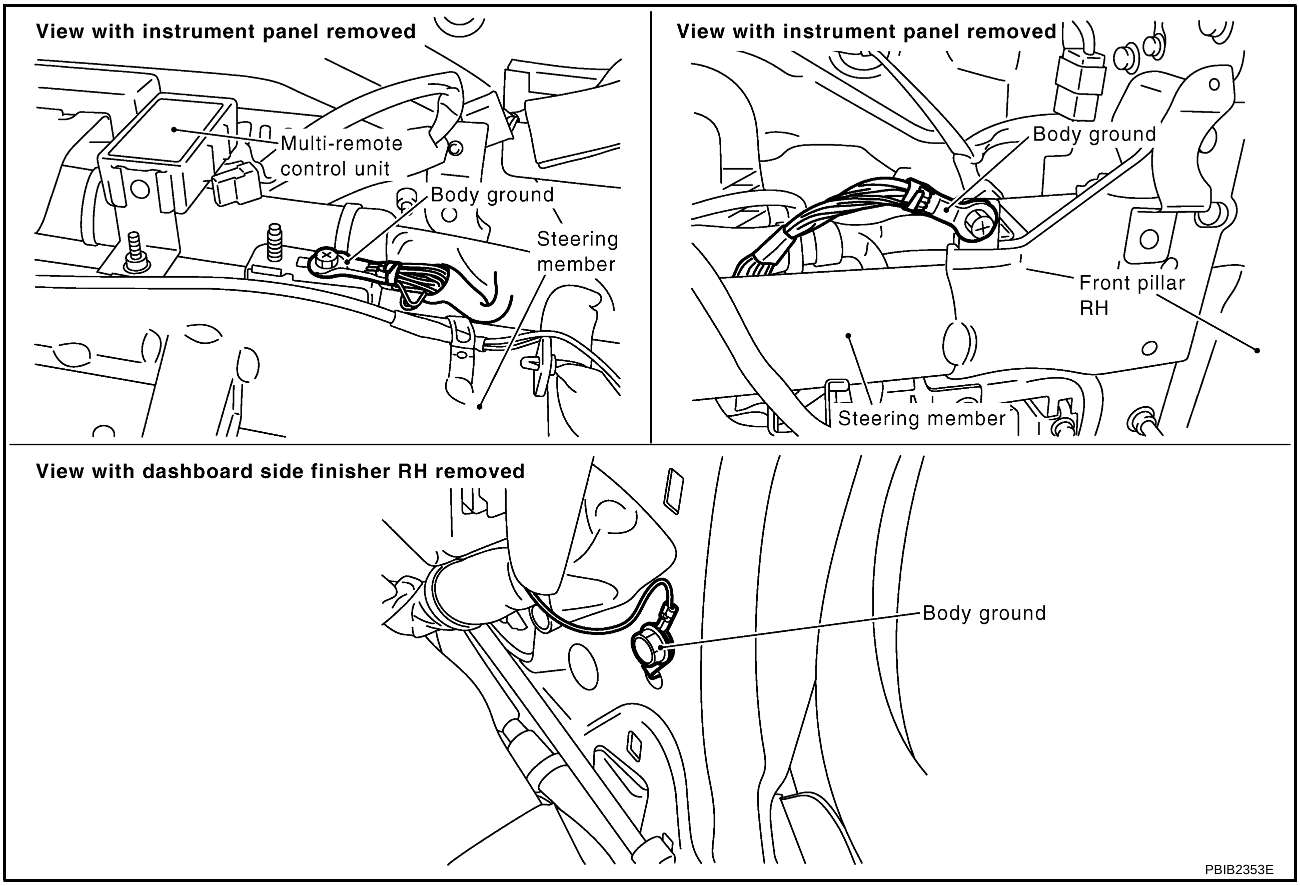

OK or NG

OK >> GO TO 18.
NG >> Repair or replace ground connections.

18. CHECK ECM GROUND CIRCUIT FOR OPEN AND SHORT-II

1. Disconnect ECM harness connector.
2. Check harness continuity between ECM terminals 1, 115, 116 and ground.
   Refer to Wiring Diagram.

   Continuity should exist.

3. Also check harness for short to power.

OK or NG

OK >> GO TO 19.
NG >> Repair open circuit or short to power in harness or connectors.

19. CHECK INTERMITTENT INCIDENT

Refer to EC-153, "TROUBLE DIAGNOSIS FOR INTERMITTENT INCIDENT" .

>> **INSPECTION END**

Component Inspection

ABS00DAR

ECM RELAY

1. Apply 12V direct current between ECM relay terminals 1 and 2.
2. Check continuity between relay terminals 3 and 5, 6 and 7.

Condition	Continuity
12V direct current supply between terminals 1 and 2	Yes
OFF	No

3. If NG, replace ECM relay.

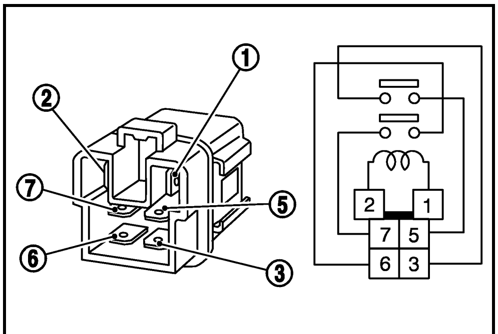

PBIB0077E

Ground Inspection

ABS00CLY

Ground connections are very important to the proper operation of electrical and electronic circuits. Ground connections are often exposed to moisture, dirt and other corrosive elements. The corrosion (rust) can become an unwanted resistance. This unwanted resistance can change the way a circuit works.

Electronically controlled circuits are very sensitive to proper grounding. A loose or corroded ground can drastically affect an electronically controlled circuit. A poor or corroded ground can easily affect the circuit. Even when the ground connection looks clean, there can be a thin film of rust on the surface.

When inspecting a ground connection follow these rules:

- Remove the ground bolt or screw.
- Inspect all mating surfaces for tarnish, dirt, rust, etc.
- Clean as required to assure good contact.
- Reinstall bolt or screw securely.
- Inspect for “add-on” accessories which may be interfering with the ground circuit.
- If several wires are crimped into one ground eyelet terminal, check for proper crimps. Make sure all of the wires are clean, securely fastened and providing a good ground path. If multiple wires are cased in one eyelet make sure no ground wires have excess wire insulation.

For detailed ground distribution information, refer to PG-13, "Ground Distribution" .

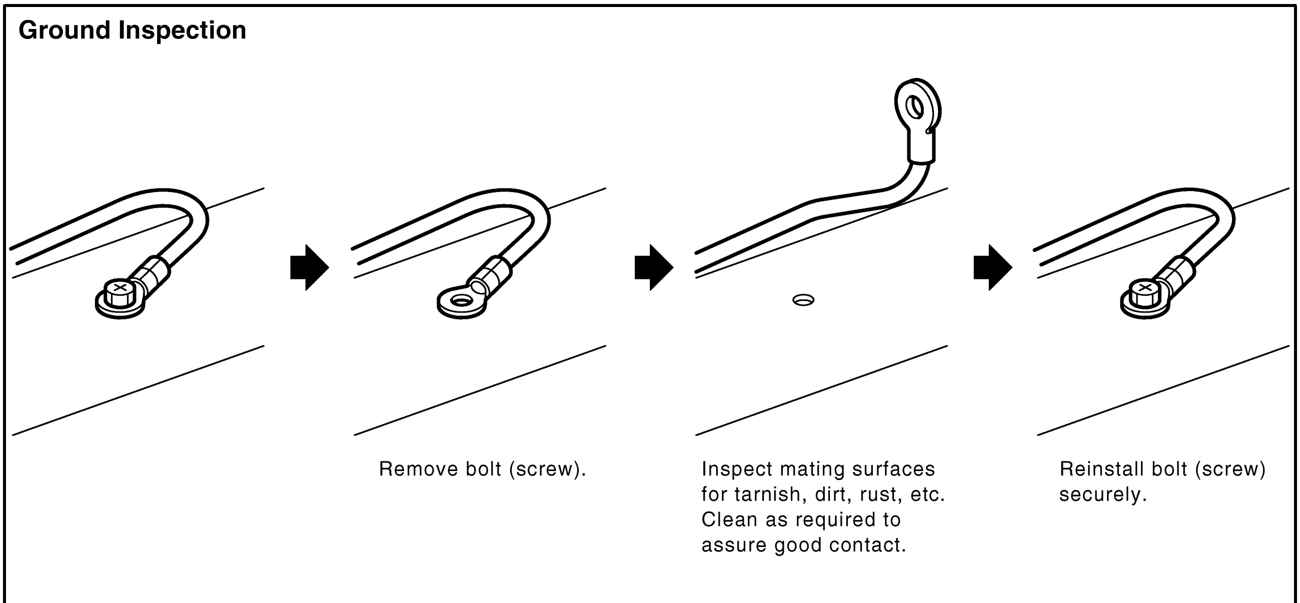

PBIB1870E

DTC U1000, U1001 CAN COMMUNICATION LINE

PFP:23710

Description

ABS00CLZ

CAN (Controller Area Network) is a serial communication line for real time application. It is an on-vehicle multiplex communication line with high data communication speed and excellent error detection ability. Many electronic control units are equipped onto a vehicle, and each control unit shares information and links with other control units during operation (not independent). In CAN communication, control units are connected with 2 communication lines (CAN H line, CAN L line) allowing a high rate of information transmission with less wiring. Each control unit transmits/receives data but selectively reads required data only.

On Board Diagnosis Logic

ABS00CM0

DTC No.	Trouble diagnosis name	DTC detecting condition	Possible cause
U1000*1 1000*1	CAN communication line	• ECM cannot communicate to other control units. • ECM cannot communicate for more than the specified time.	• Harness or connectors (CAN communication line is open or shorted)
U1001*2 1001*2			

*1: **This self-diagnosis has the one trip detection logic. (A/T models)**
The MIL will not light up for this diagnosis. (M/T models)
*2: **The MIL will not light up for this diagnosis.**

DTC Confirmation Procedure

ABS00CM1

1. Turn ignition switch ON and wait at least 3 seconds.
2. Select “DATA MONITOR” mode with CONSULT-II.
3. If 1st trip DTC is detected, go to EC-164, "Diagnostic Procedure" .

Wiring Diagram

ABS00CM2

EC-CAN-01

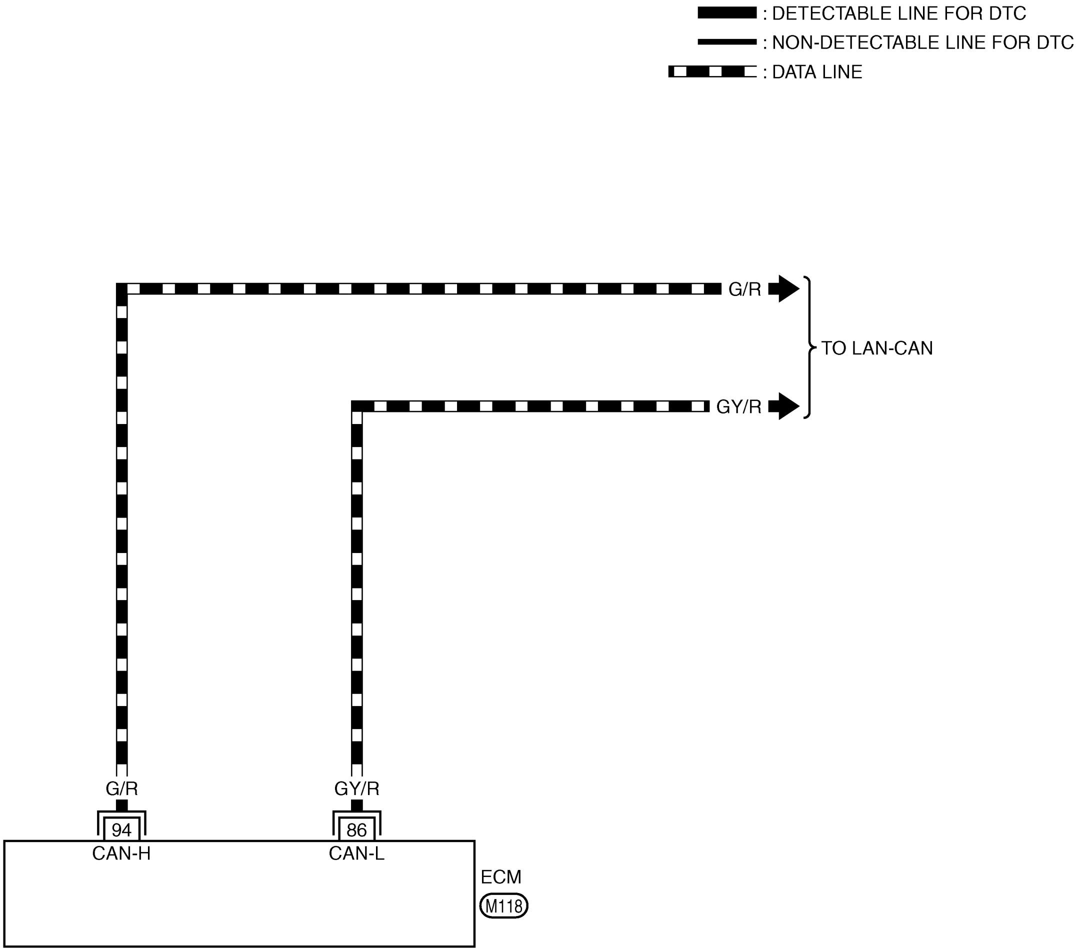

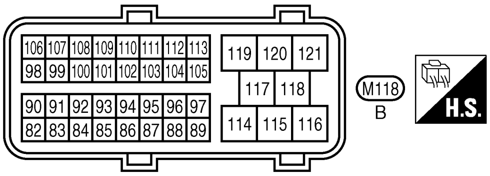

TBWA0595E

Diagnostic Procedure

ABS00CM3

Go to LAN-4, "TROUBLE DIAGNOSES WORK FLOW" .

DTC P0011 IVT CONTROL

PFP:23796

Description

ABS00CM4

SYSTEM DESCRIPTION

Sensor	Input signal to ECM	ECM function	Actuator
Crankshaft position sensor (POS)	Engine speed and piston position	Intake valve timing control	Intake valve timing control solenoid valve
Camshaft position sensor (PHASE)			
Engine coolant temperature sensor	Engine coolant temperature		
Wheel sensor*	Vehicle speed		

*: This signal is sent to ECM through CAN communication line.

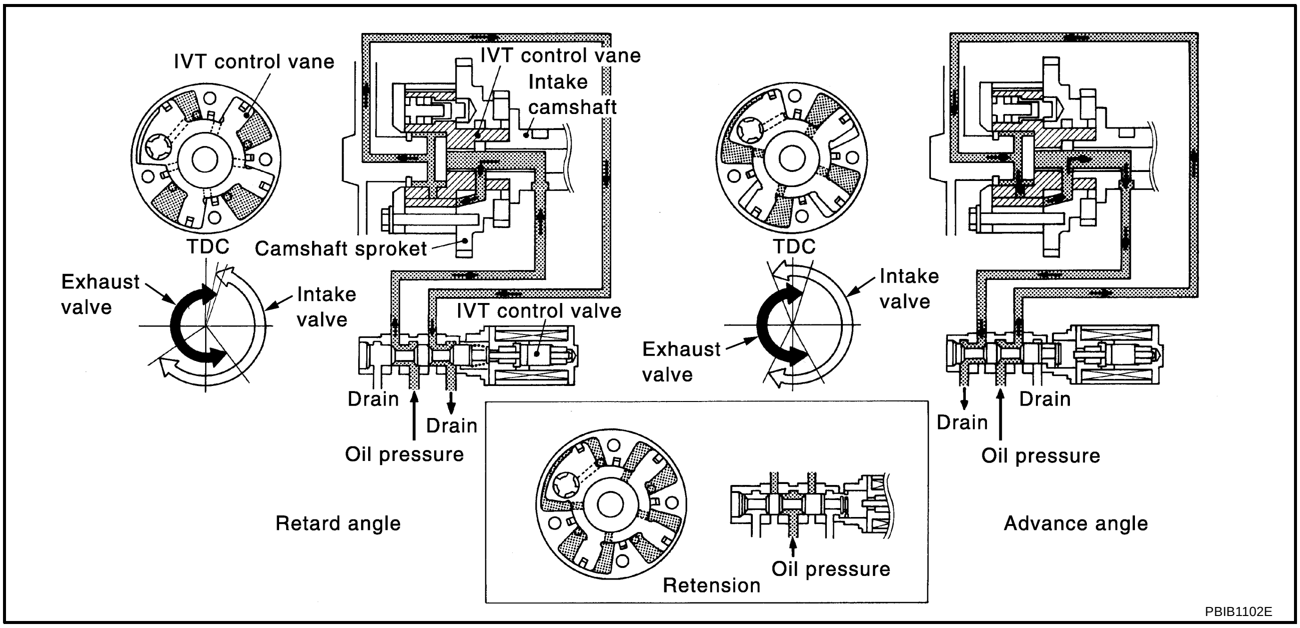

This mechanism hydraulically controls cam phases continuously with the fixed operating angle of the intake valve.

The ECM receives signals such as crankshaft position, camshaft position, engine speed, and engine coolant temperature. Then, the ECM sends ON/OFF pulse duty signals to the intake valve timing control solenoid valve depending on driving status. This makes it possible to control the shut/open timing of the intake valve to increase engine torque in low/mid speed range and output in high-speed range.

CONSULT-II Reference Value in Data Monitor Mode

ABS00CM5

Specification data are reference values.

MONITOR ITEM	CONDITION		SPECIFICATION
INT/V TIM (B1)	● Engine: After warming up ● Shift lever: P or N (A/T), Neutral (M/T) ● Air conditioner switch: OFF ● No-load	Idle	−5° - 5°CA
		When revving engine up to 2,000 rpm quickly.	Approx. 0° - 20°CA
INT/V SOL (B1)	● Engine: After warming up ● Shift lever: P or N (A/T), Neutral (M/T) ● Air conditioner switch: OFF ● No-load	Idle	0% - 2%
		When revving engine up to 2,000 rpm quickly.	Approx. 0% - 50%

On Board Diagnosis Logic

ABS00CM6

DTC No.	Trouble diagnosis name	Detecting condition	Possible cause
P0011 0011	Intake valve timing control performance	There is a gap between angle of target and phase-control angle degree.	● Crankshaft position sensor (POS) ● Camshaft position sensor (PHASE) ● intake valve control solenoid valve ● Accumulation of debris to the signal pick-up portion of the camshaft ● Timing chain installation ● Foreign matter caught in the oil groove for intake valve timing control

FAIL-SAFE MODE

ECM enters fail-safe mode when the malfunction is detected.

Detected items	Engine operating condition in fail-safe mode
Intake valve timing control	The signal is not energized to the solenoid valve and the valve control does not function

DTC Confirmation Procedure

ABS00CM7

CAUTION:

Always drive at a safe speed.

NOTE:

- **If DTC P0011 is displayed with DTC P1111, first perform trouble diagnosis for DTC P1111. Refer to EC-423 .**
- If DTC Confirmation Procedure has been previously conducted, always turn ignition switch OFF and wait at least 10 seconds before conducting the next test.

TESTING CONDITION:

Before performing the following procedure, confirm that battery voltage is between 10V and 16V at idle.

WITH CONSULT-II

1. Turn ignition switch ON and select “DATA MONITOR” mode with CONSULT-II.
2. Start engine and warm it up to the normal operating temperature.
3. Maintain the following conditions for at least 10 consecutive seconds.
   Hold the accelerator pedal as steady as possible.

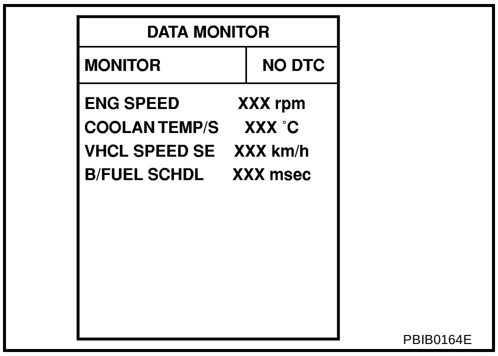

ENG SPEED	500 - 2,000 rpm (A constant rotation is maintained.)
COOLAN TEMPS	60 - 120°C (158 - 248°F)
B/FUEL SCHDL	More than 7.26 msec
Shift lever	P or N (A/T), Neutral (M/T) position

4. Let engine idle for 10 seconds.
5. If the 1st trip DTC is detected, go to EC-167, "Diagnostic Procedure" .
   If the 1st trip DTC is not detected, go to next step.
6. Maintain the following conditions for at least 20 consecutive seconds.

ENG SPEED	1,700 - 3,175 rpm (A constant rotation is maintained.)
COOLAN TEMPS	70 - 105°C (158 - 221°F)
Shift lever	1st or 2nd position
Driving location uphill	Driving vehicle uphill (Increased engine load will help maintain the driving conditions required for this test.)

7. If the 1st trip DTC is detected, go to EC-167, "Diagnostic Procedure" .

WITH GST

Follow the procedure “WITH CONSULT-II” above.

Diagnostic Procedure

ABS00CM8

1. CHECK OIL PRESSURE WARNING LAMP

1. Start engine.
2. Check oil pressure warning lamp and confirm it is not illuminated.

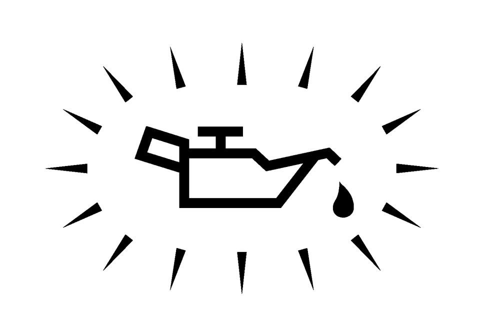
PBIA8559J

OK or NG

OK >> GO TO 2.
NG >> Go to LU-6, "OIL PRESSURE CHECK" .

2. CHECK INTAKE VALVE TIMING CONTROL SOLENOID VALVE

Refer to EC-168, "Component Inspection" .

OK or NG

OK >> GO TO 3.
NG >> Replace intake valve timing control solenoid valve.

3. CHECK CRANKSHAFT POSITION SENSOR (POS)

Refer to EC-316, "Component Inspection" .

OK or NG

OK >> GO TO 4.
NG >> Replace crankshaft position sensor (POS).

4. CHECK CAMSHAFT POSITION SENSOR (PHASE)

Refer to EC-324, "Component Inspection" .

OK or NG

OK >> GO TO 5.
NG >> Replace camshaft position sensor (PHASE).

5. CHECK CAMSHAFT (INTAKE)

Check the following.

- Accumulation of debris to the signal plate of camshaft rear end
- Chipping signal plate of camshaft rear end

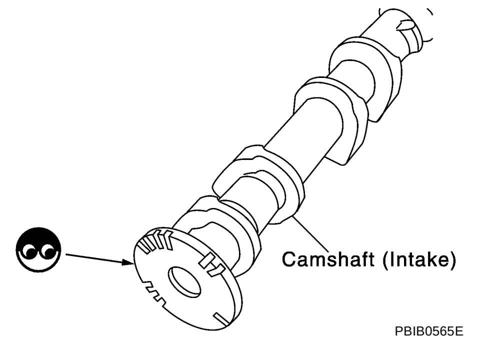

PBIB0565E

OK or NG

OK >> GO TO 6.
NG >> Remove debris and clean the signal plate of camshaft rear end or replace camshaft.

6. CHECK TIMING CHAIN INSTALLATION

Check service records for any recent repairs that may cause timing chain misaligned.

OK or NG

OK >> Check timing chain installation. Refer to EM-49, "TIMING CHAIN" .
NG >> GO TO 7.

7. CHECK LUBRICATION CIRCUIT

Refer to EM-45, "Inspection of Camshaft Sprocket (INT) Oil Groove" .

OK or NG

OK >> GO TO 8.
NG >> Clean lubrication line.

8. CHECK INTERMITTENT INCIDENT

Refer to EC-153, "TROUBLE DIAGNOSIS FOR INTERMITTENT INCIDENT" .
For Wiring Diagram, refer to EC-312 for CKP sensor (POS) and EC-320 for CMP sensor (PHASE).

>> **INSPECTION END**

Component Inspection

ABS00DCT

INTAKE VALVE TIMING CONTROL SOLENOID VALVE

1. Disconnect intake valve timing control solenoid valve harness connector.
2. Check resistance between intake valve timing control solenoid valve as follows.

Terminal	Resistance
1 and 2	8Ω [at 20°C (68°F)]
1 or 2 and ground	∞ Ω (Continuity should not exist.)

If NG, replace intake valve timing control solenoid valve.
If OK, go to next step.

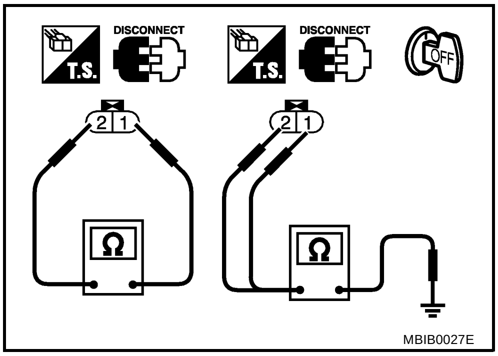

MBIB0027E

3. Remove intake valve timing control solenoid valve.
4. Provide 12V DC between intake valve timing control solenoid valve terminals and then interrupt it. Make sure that the plunger moves as shown in the figure.

CAUTION:

Do not apply 12V DC continuously for 5 seconds or more. Doing so may result in damage to the coil in intake valve timing control solenoid valve.

If NG, replace intake valve timing control solenoid valve.

NOTE:

Always replace O-ring when intake valve timing control solenoid valve is removed.

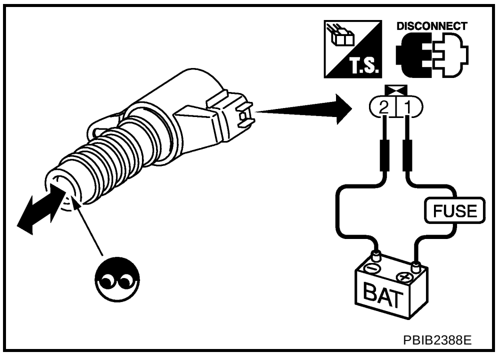

PBIB2388E

Removal and Installation

ABS00DCU

INTAKE VALVE TIMING CONTROL SOLENOID VALVE

Refer to EM-49, "TIMING CHAIN" .

DTC P0031, P0032 HO2S1 HEATER

PFP:22690

A
EC
C
D
E
F
G
H
I
J
K
L
M

Description

ABS00D68

SYSTEM DESCRIPTION

Sensor	Input Signal to ECM	ECM function	Actuator
Camshaft position sensor (PHASE) Crankshaft position sensor (POS)	Engine speed	Heated oxygen sensor 1 heater control	Heated oxygen sensor 1 heater
Engine coolant temperature sensor	Engine coolant temperature		

The ECM performs ON/OFF duty control of the heated oxygen sensor 1 heater corresponding to the engine speed and engine coolant temperature. The duty percent varies with engine coolant temperature when engine is started.

OPERATION

Engine speed rpm	Heated oxygen sensor 1 heater
Above 3,600	OFF
Below 3,600	ON

CONSULT-II Reference Value in Data Monitor Mode

ABS00D69

Specification data are reference values.

MONITOR ITEM	CONDITION	SPECIFICATION
HO2S1 HTR (B1)	• Engine: After warming up • Engine speed: Below 3,600 rpm	ON
	• Engine speed: Above 3,600 rpm	OFF
O2SEN HTR DTY	• Engine coolant temperature when engine started: More than 80°C (176°F) • Engine speed: Below 3,600 rpm	Approx. 50%

On Board Diagnosis Logic

ABS00D6A

DTC No.	Trouble diagnosis name	DTC detecting condition	Possible cause
P0031 0031	Heated oxygen sensor 1 heater control circuit low	The current amperage in the heated oxygen sensor 1 heater circuit is out of the normal range. (An excessively low voltage signal is sent to ECM through the heated oxygen sensor 1 heater.)	• Harness or connectors (The heated oxygen sensor 1 heater circuit is open or shorted.) • Heater oxygen sensor 1 heater
P0032 0032	Heated oxygen sensor 1 heater control circuit high	The current amperage in the heated oxygen sensor 1 heater circuit is out of the normal range. (An excessively high voltage signal is sent to ECM through the heated oxygen sensor 1 heater.)	• Harness or connectors (The heated oxygen sensor 1 heater circuit is shorted.) • Heater oxygen sensor 1 heater

DTC Confirmation Procedure

ABS00D6B

NOTE:
If DTC Confirmation Procedure has been previously conducted, always turn ignition switch OFF and wait at least 10 seconds before conducting the next test.
TESTING CONDITION:
Before performing the following procedure, confirm that battery voltage is between 10.5V and 16V at idle.

WITH CONSULT-II

1. Start engine and warm it up to normal operating temperature.
2. Turn ignition switch OFF and wait at least 10 seconds.

3. Turn ignition switch ON and select “DATA MONITOR” mode with CONSULT-II.
4. Start engine and run it for at least 6 seconds at idle speed.
5. If 1st trip DTC is detected, go to EC-172, "Diagnostic Procedure".

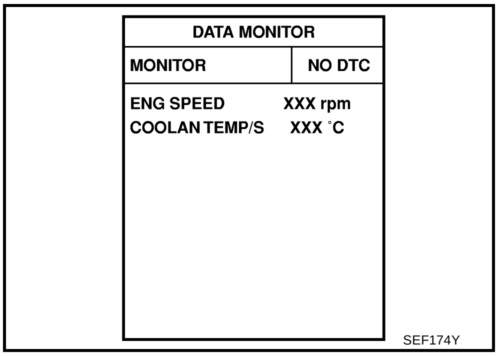

WITH GST

Follow the procedure “WITH CONSULT-II” above.

Wiring Diagram

ABS00D6C

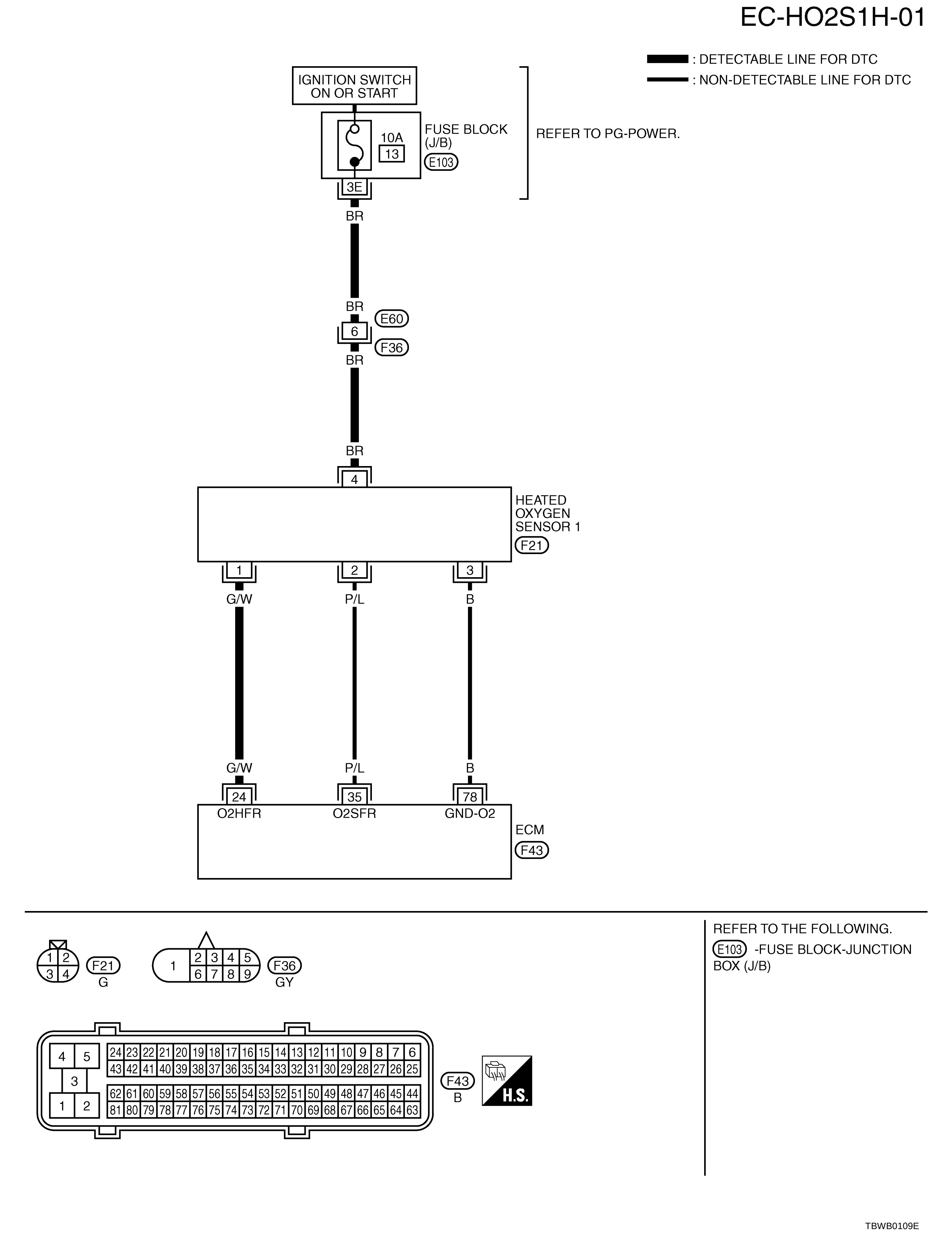

Specification data are reference values and are measured between each terminal and ground.
Pulse signal is measured by CONSULT-II.

CAUTION:

Do not use ECM ground terminals when measuring input/output voltage. Doing so may result in damage to the ECM's transistor. Use a ground other than ECM terminals, such as the ground.

TERMINAL NO.	WIRE COLOR	ITEM	CONDITION	DATA (DC Voltage)
24	G/W	Heated oxygen sensor 1 heater	**[Engine is running]** ● **Warm-up condition** ● Engine speed is below 3,600 rpm.	Approximately 7.0V★ 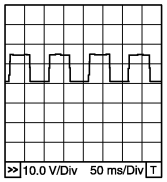 PBIB0519E
			[Engine is running] ● Engine speed is above 3,600 rpm.	BATTERY VOLTAGE (11 - 14V)

★: Average voltage for pulse signal (Actual pulse signal can be confirmed by oscilloscope.)

Diagnostic Procedure

ABS00D82

1. CHECK GROUND CONNECTIONS

1. Turn ignition switch OFF.
2. Loosen and retighten three ground screws on the body.
   Refer to EC-161, "Ground Inspection" .

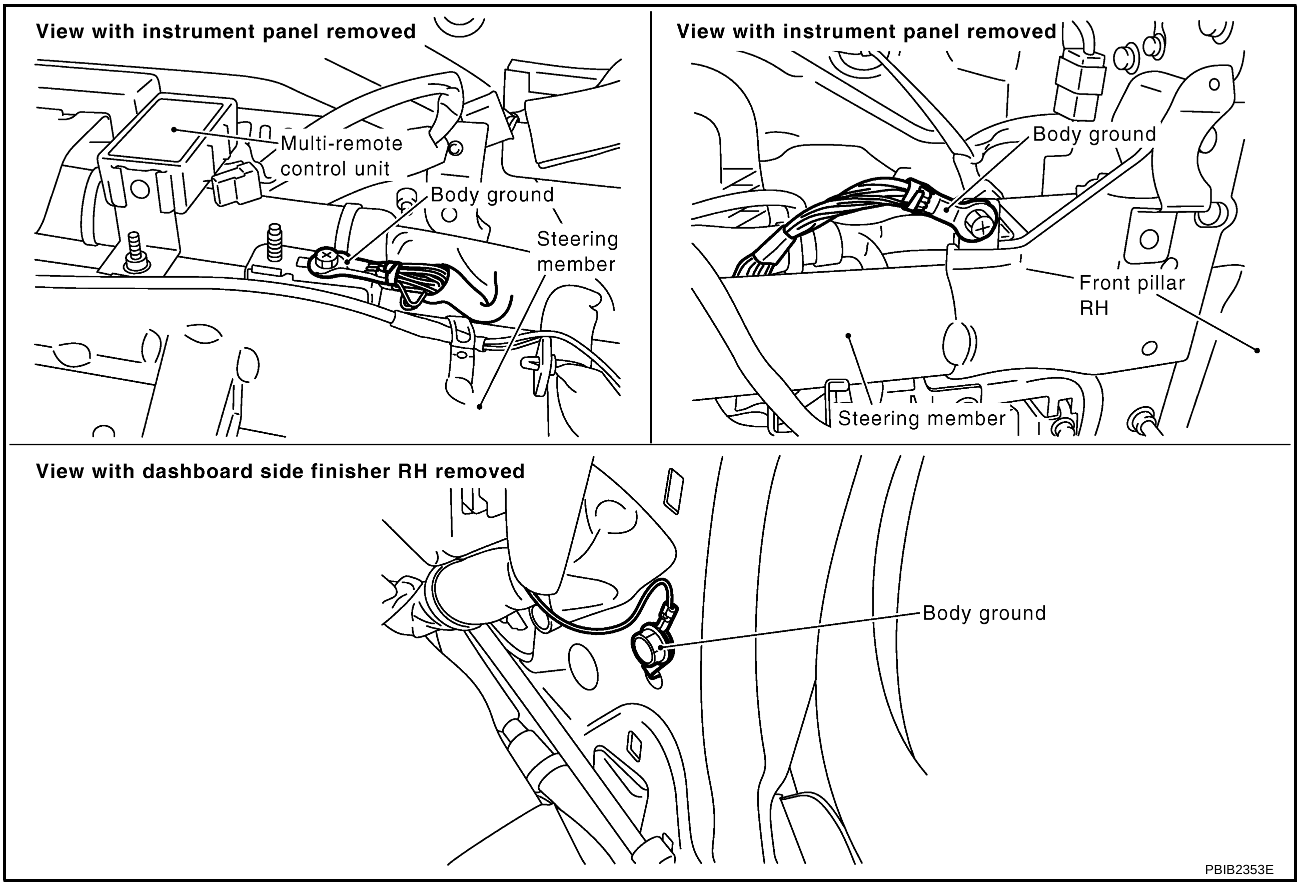

OK or NG

OK >> GO TO 2.

NG >> Repair or replace ground connections.

2. CHECK HO2S1 POWER SUPPLY CIRCUIT

1. Disconnect heated oxygen sensor 1 harness connector.
2. Turn ignition switch ON.

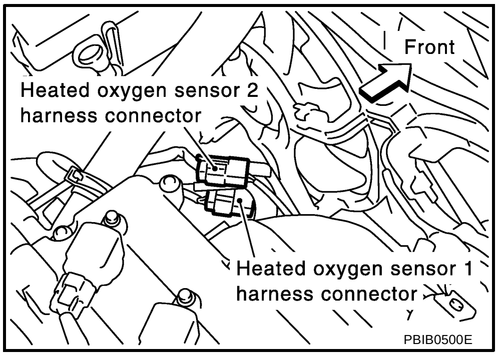

3. Check voltage between HO2S1 terminal 4 and ground with CONSULT-II or tester.

Voltage: Battery voltage

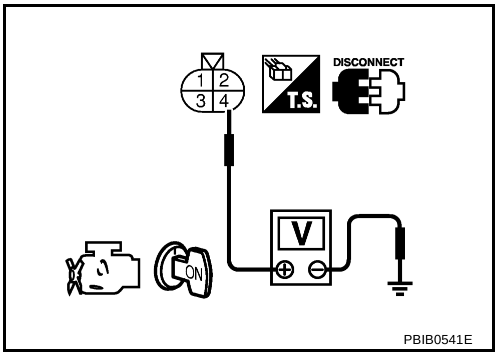

OK or NG

OK >> GO TO 4.
NG >> GO TO 3.

3. DETECT MALFUNCTIONING PART

Check the following.

- Harness connectors E60, F36
- Fuse block (J/B) connector E103
- 10A fuse
- Harness for open or short between heated oxygen sensor 1 and fuse

>> Repair open circuit or short to ground or short to power in harness or connectors.

4. CHECK HO2S1 OUTPUT SIGNAL CIRCUIT FOR OPEN AND SHORT

1. Turn ignition switch OFF.
2. Disconnect ECM harness connector.
3. Check harness continuity between ECM terminal 24 and HO2S1 terminal 1.
   Refer to Wiring Diagram.

   Continuity should exist.

4. Also check harness for short to ground and short to power.

OK or NG

OK >> GO TO 5.
NG >> Repair open circuit or short to ground or short to power in harness or connectors.

5. CHECK HEATED OXYGEN SENSOR 1 HEATER

Refer to EC-174, "Component Inspection" .

OK or NG

OK >> GO TO 6.
NG >> Replace heated oxygen sensor 1.

6. CHECK INTERMITTENT INCIDENT

Refer to EC-153, "TROUBLE DIAGNOSIS FOR INTERMITTENT INCIDENT" .

>> **INSPECTION END**

Component Inspection

ABS00D6E

HEATED OXYGEN SENSOR 1 HEATER

1. Check resistance between HO2S1 terminals as follows.

Terminal No.	Resistance
1 and 4	3.3 - 4.0 Ω [at 25°C (77°F)]
2 and 1, 3, 4	∞ Ω (Continuity should not exist)
3 and 1, 2, 4	

2. If NG, replace heated oxygen sensor 1.

CAUTION:

- **Discard any heated oxygen sensor which has been dropped from a height of more than 0.5 m (19.7 in) onto a hard surface such as a concrete floor; use a new one.**
- **Before installing new oxygen sensor, clean exhaust system threads using Oxygen Sensor Thread Cleaner tool J-43897-18 or J-43897-12 and approved anti-seize lubricant.**

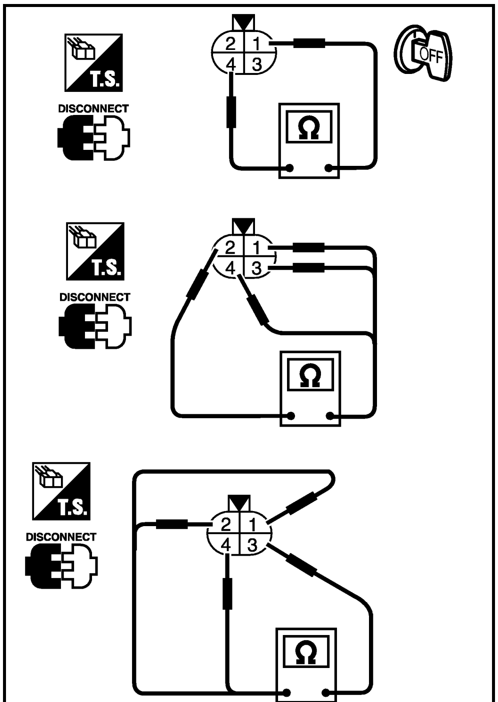

PBIB0542E

Removal and Installation

ABS00D6F

HEATED OXYGEN SENSOR 1

Refer to EM-20, "EXHAUST MANIFOLD AND THREE WAY CATALYST" .

DTC P0037, P0038 HO2S2 HEATER

PFP:226A0

Description

ABS00CM9

SYSTEM DESCRIPTION

Sensor	Input Signal to ECM	ECM Function	Actuator
Camshaft position sensor (PHASE)	Engine speed	Heated oxygen sensor 2 heater control	Heated oxygen sensor 2 heater
Crankshaft position sensor (POS)			
Engine coolant temperature sensor	Engine coolant temperature		
Mass air flow sensor	Amount of intake air		

The ECM performs ON/OFF control of the heated oxygen sensor 2 heater corresponding to the engine speed, amount of intake air and engine coolant temperature.

OPERATION

Engine speed rpm	Heated oxygen sensor 2 heater
Above 3,600	OFF
● Below 3,600 rpm after the following conditions are met. ● Engine: After warming up ● Keeping the engine speed between 3,500 and 4,000 rpm for 1 minute and at idle for 1 minute under no load	ON

CONSULT-II Reference Value in Data Monitor Mode

ABS00CMA

Specification data are reference values.

MONITOR ITEM	CONDITION	SPECIFICATION
HO2S2 HTR (B1)	● Engine speed: Below 3,600 rpm after the following conditions are met ● Engine: After warming up ● Keeping the engine speed between 3,500 and 4,000 rpm for 1 minute and at idle for 1 minute under no load.	ON
	● Engine speed: Above 3,600 rpm	OFF

On Board Diagnosis Logic

ABS00CMB

DTC No.	Trouble diagnosis name	DTC detecting condition	Possible cause
P0037 0037	Heated oxygen sensor 2 heater control circuit low	The current amperage in the heated oxygen sensor 2 heater circuit is out of the normal range. (An excessively low voltage signal is sent to ECM through the heated oxygen sensor 2 heater.)	● Harness or connectors (The heated oxygen sensor 2 heater circuit is open or shorted.) ● Heater oxygen sensor 2 heater
P0038 0038	Heated oxygen sensor 2 heater control circuit high	The current amperage in the heated oxygen sensor 2 heater circuit is out of the normal range. (An excessively high voltage signal is sent to ECM through the heated oxygen sensor 2 heater.)	● Harness or connectors (The heated oxygen sensor 2 heater circuit is shorted.) ● Heater oxygen sensor 2 heater

DTC Confirmation Procedure

ABS00CMC

NOTE:

If DTC Confirmation Procedure has been previously conducted, always turn ignition switch OFF and wait at least 10 seconds before conducting the next test.

TESTING CONDITION:

Before performing the following procedure, confirm that battery voltage is between 10.5V and 16V at idle.

WITH CONSULT-II

1. Turn ignition switch ON and select “DATA MONITOR” mode with CONSULT-II.
2. Start engine and warm it up to the normal operating temperature.
3. Turn ignition switch OFF and wait at least 10 seconds.

4. Start engine and keep the engine speed between 3,500 and 4,000 rpm for at least 1 minute under no load.
5. Let engine idle for 1 minute.
6. If 1st trip DTC is detected, go to EC-178, "Diagnostic Procedure" .

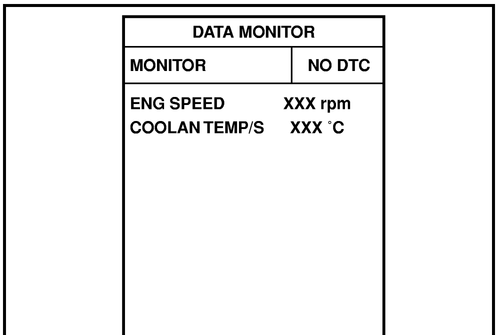

SEF174Y

WITH GST

Follow the procedure “WITH CONSULT-II” above.

Wiring Diagram

ABS00CMD

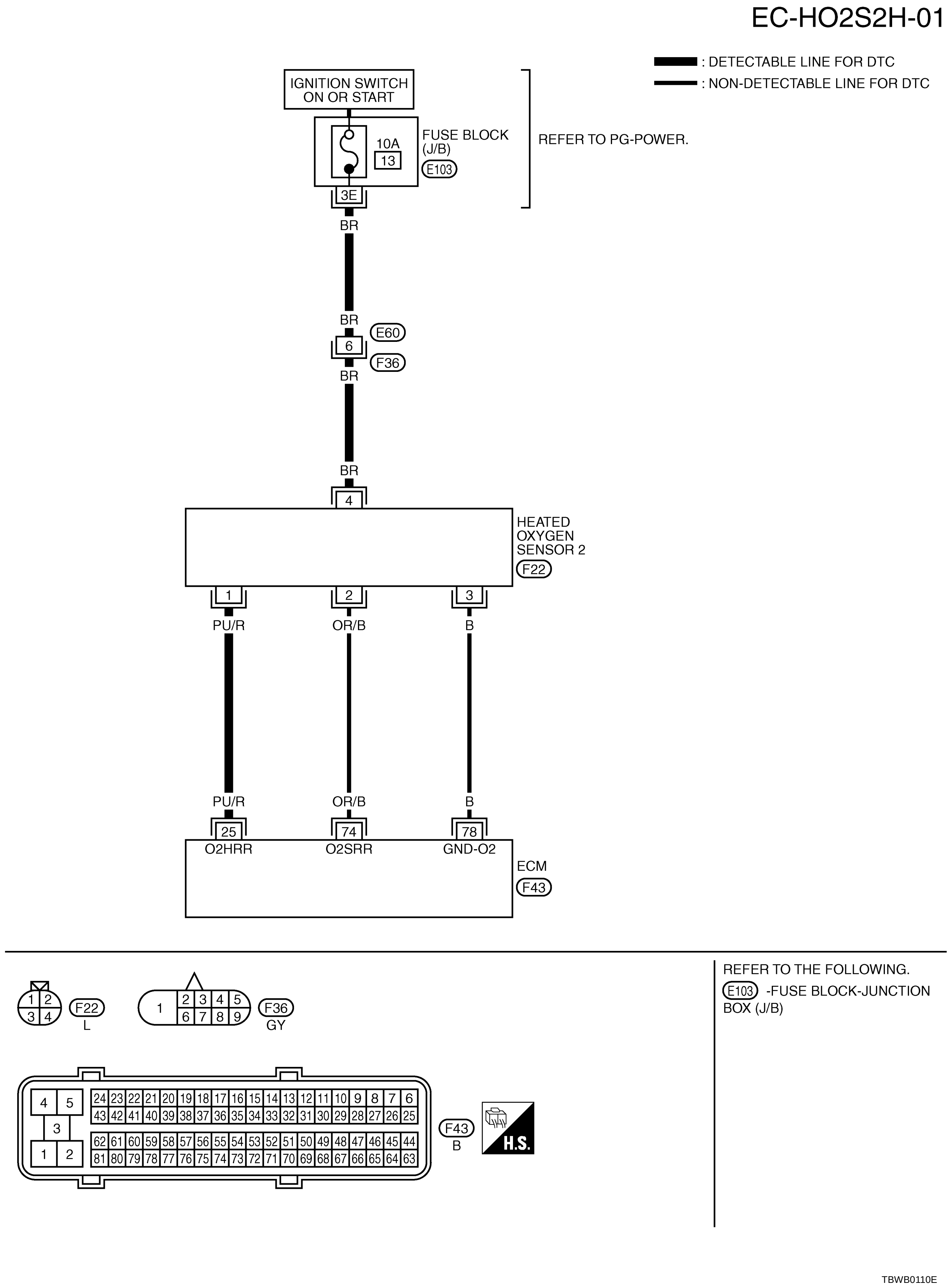

Specification data are reference values and are measured between each terminal and ground.

CAUTION:

Do not use ECM ground terminals when measuring input/output voltage. Doing so may result in damage to the ECM's transistor. Use a ground other than ECM terminals, such as the ground.

TER-MINAL NO.	WIRE COLOR	ITEM	CONDITION	DATA (DC Voltage)
25	PU/R	Heated oxygen sensor 2 heater	**[Engine is running]** ● **Warm-up condition** ● Engine speed: Below 3,600 rpm after the following conditions are met. ● Keeping the engine speed between 3,500 and 4,000 rpm for 1 minute and at idle for 1 minute under on load	0 - 1.0V
			[Ignition switch: ON] ● Engine stopped. **[Engine is running]** ● Engine speed is above 3,600 rpm.	BATTERY VOLTAGE (11 - 14V)

Diagnostic Procedure

ABS00D83

1. CHECK GROUND CONNECTIONS

1. Turn ignition switch OFF.
2. Loosen and retighten three ground screws on the body.
   Refer to EC-161, "Ground Inspection" .

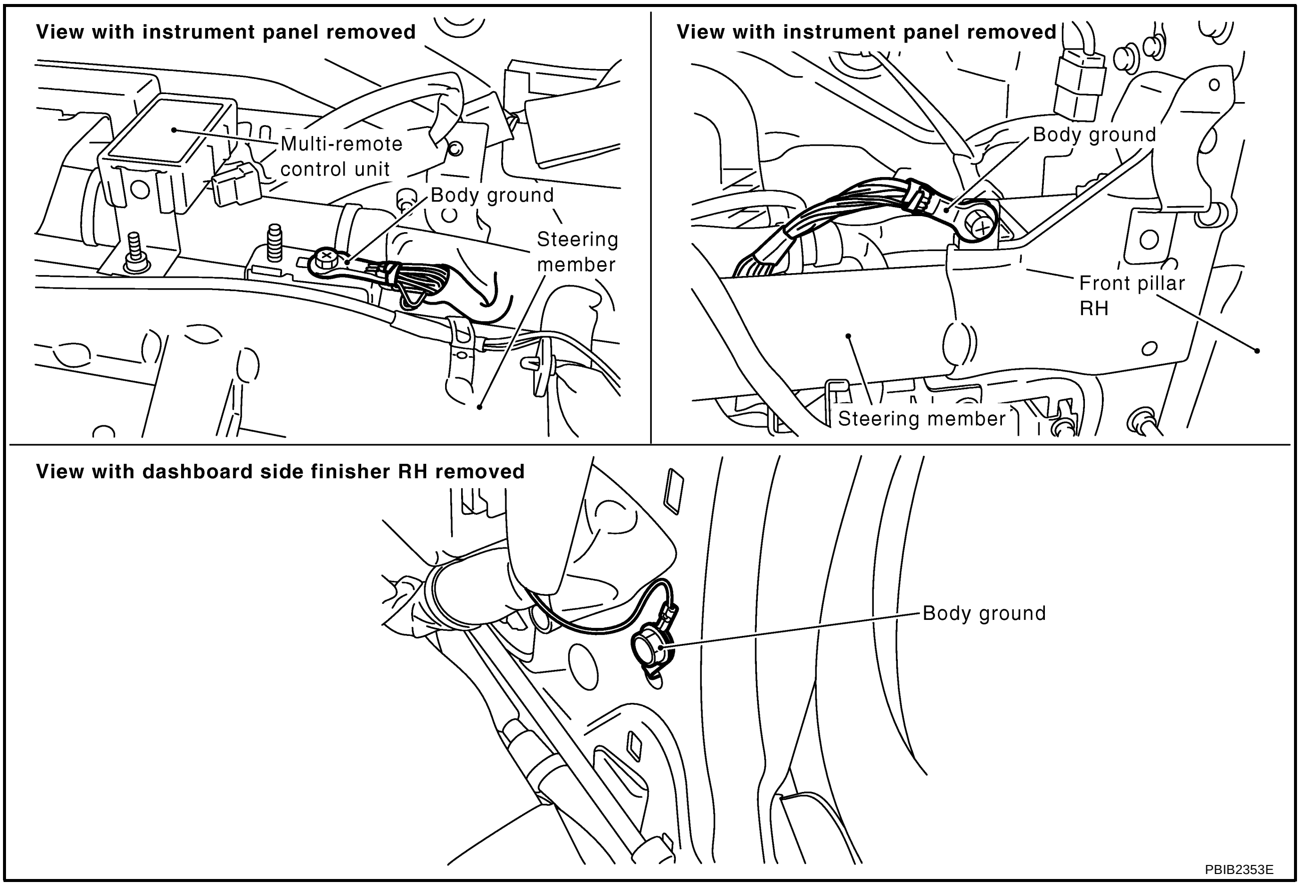

OK or NG

OK >> GO TO 2.

NG >> Repair or replace ground connections.

2. CHECK HO2S2 POWER SUPPLY CIRCUIT

1. Disconnect heated oxygen sensor 2 harness connector.
2. Turn ignition switch ON.

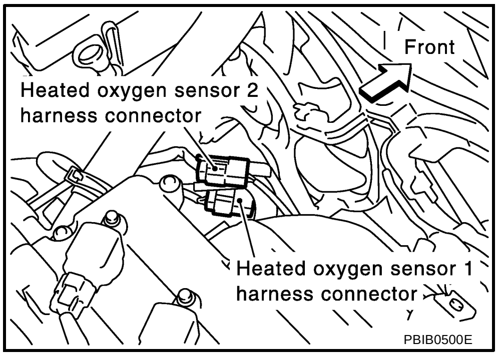

3. Check voltage between HO2S2 terminal 4 and ground with CONSULT-II or tester.

Voltage: Battery voltage

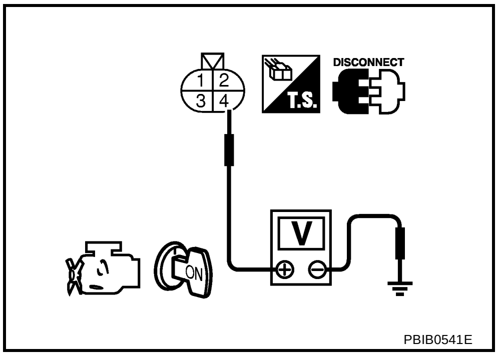

OK or NG

OK >> GO TO 4.
NG >> GO TO 3.

3. DETECT MALFUNCTIONING PART

Check the following.

- Harness connectors E60, F36
- Fuse block (J/B) connector E103
- 10A fuse
- Harness for open or short between heated oxygen sensor 2 and fuse

>> Repair open circuit or short to ground or short to power in harness or connectors.

4. CHECK HO2S2 OUTPUT SIGNAL CIRCUIT FOR OPEN AND SHORT

1. Turn ignition switch OFF.
2. Disconnect ECM harness connector.
3. Check harness continuity between ECM terminal 25 and HO2S2 terminal 1.
   Refer to Wiring Diagram.

Continuity should exist.

4. Also check harness for short to ground and short to power.

OK or NG

OK >> GO TO 5.
NG >> Repair open circuit or short to ground or short to power in harness or connectors.

5. CHECK HEATED OXYGEN SENSOR 2 HEATER

Refer to EC-180, "Component Inspection" .

OK or NG

OK >> GO TO 6.
NG >> Replace heated oxygen sensor 2.

6. CHECK INTERMITTENT INCIDENT

Refer to EC-153, "TROUBLE DIAGNOSIS FOR INTERMITTENT INCIDENT" .

>> **INSPECTION END**

Component Inspection

ABS00CMF

HEATED OXYGEN SENSOR 2 HEATER

1. Check resistance between HO2S2 terminals as follows.

Terminal No.	Resistance
1 and 4	5.0 - 7.0 Ω [at 25°C (77°F)]
2 and 1, 3, 4	∞ Ω (Continuity should not exist)
3 and 1, 2, 4	

2. If NG, replace heated oxygen sensor 2.

CAUTION:

- **Discard any heated oxygen sensor which has been dropped from a height of more than 0.5 m (19.7 in) onto a hard surface such as a concrete floor; use a new one.**
- **Before installing new oxygen sensor, clean exhaust system threads using Oxygen Sensor Thread Cleaner tool J-43897-18 or J-43897-12 and approved anti-seize lubricant.**

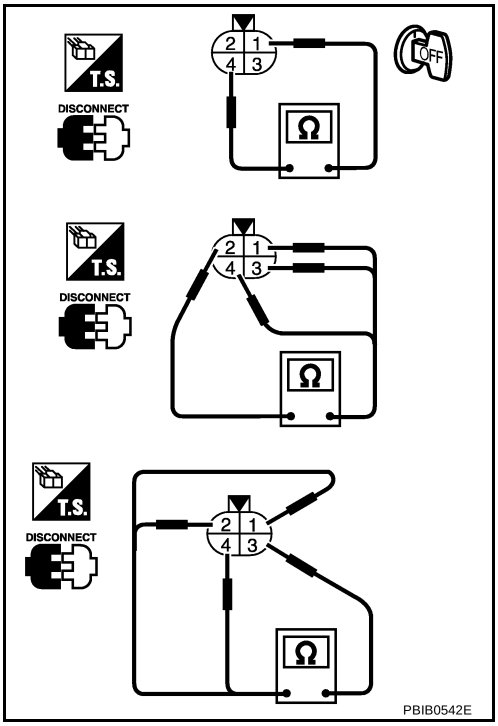

PBIB0542E

Removal and Installation

ABS00CMG

HEATED OXYGEN SENSOR 2

Refer to EM-20, "EXHAUST MANIFOLD AND THREE WAY CATALYST" .

DTC P0101 MAF SENSOR

PFP:22680

Component Description

ABS00CMH

The mass air flow sensor is placed in the stream of intake air. It measures the intake flow rate by measuring a part of the entire intake flow. The mass air flow sensor controls the temperature of the hot wire to a certain amount. The heat generated by the hot wire is reduced as the intake air flows around it. The more air, the greater the heat loss.

Therefore, the electric current supplied to hot wire is changed to maintain the temperature of the hot wire as air flow increases. The ECM detects the air flow by means of this current change.

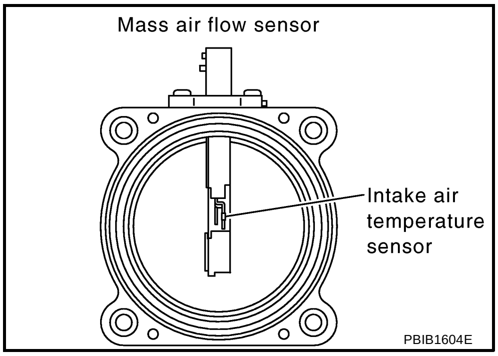

CONSULT-II Reference Value in Data Monitor Mode

ABS00CMI

Specification data are reference values.

MONITOR ITEM	CONDITION		SPECIFICATION
MAS A/F SE-B1	See EC-143, "TROUBLE DIAGNOSIS - SPECIFICATION VALUE" .		
CAL/LD VALUE	● Engine: After warming up ● Shift lever: P or N (A/T), Neutral (M/T) ● Air conditioner switch: OFF ● No-load	Idle	10% - 35%
		2,500 rpm	10% - 35%
MASS AIRFLOW	● Engine: After warming up ● Shift lever: P or N (A/T), Neutral (M/T) ● Air conditioner switch: OFF ● No-load	Idle	1.0 - 4.0 g·m/s
		2,500 rpm	4.0 - 10.0 g·m/s

On Board Diagnosis Logic

ABS00CMJ

DTC No.	Trouble diagnosis name	DTC detecting condition		Possible cause
P0101 0101	Mass air flow sensor circuit range/performance problem	A)	A high voltage from the sensor is sent to ECM under light load driving condition.	● Harness or connectors (The sensor circuit is open or shorted.) ● Mass air flow sensor ● EVAP control system pressure sensor ● Intake air temperature sensor
		B)	A low voltage from the sensor is sent to ECM under heavy load driving condition.	● Harness or connectors (The sensor circuit is open or shorted.) ● Intake air leaks ● Mass air flow sensor ● EVAP control system pressure sensor ● Intake air temperature sensor

DTC Confirmation Procedure

ABS00CMK

Perform PROCEDURE FOR MALFUNCTION A first.
If the 1st trip DTC cannot be confirmed, perform PROCEDURE FOR MALFUNCTION B.

NOTE:
If DTC Confirmation Procedure has been previously conducted, always turn ignition switch OFF and wait at least 10 seconds before conducting the next test.

PROCEDURE FOR MALFUNCTION A

NOTE:

If engine will not start or stops soon, wait at least 10 seconds with engine stopped (Ignition switch ON) instead of running engine at idle speed.

With CONSULT-II

1. Turn ignition switch ON.
2. Select “DATA MONITOR” mode with CONSULT-II.
3. Start engine and warm it up to normal operating temperature.
4. Run engine for at least 10 seconds at idle speed.
5. If 1st trip DTC is detected, go to EC-185, "Diagnostic Procedure" .

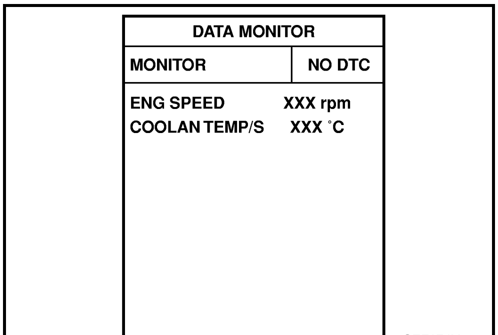

SEF174Y

With GST

Follow the procedure “With CONSULT-II” above.

PROCEDURE FOR MALFUNCTION B

CAUTION:

Always drive vehicle at a safe speed.

With CONSULT-II

1. Turn ignition switch ON.
2. Start engine and warm it up to normal operating temperature.
   If engine cannot be started, go to EC-185, "Diagnostic Procedure" .
3. Select “DATA MONITOR” mode with CONSULT-II.
4. Check the voltage of “MAS A/F SE-B1” with “DATA MONITOR”.
5. Increases engine speed to about 4,000 rpm.
6. Monitor the linear voltage rise in response to engine speed increases.
   If NG, go toEC-185, "Diagnostic Procedure" .
   If OK, go to following step.

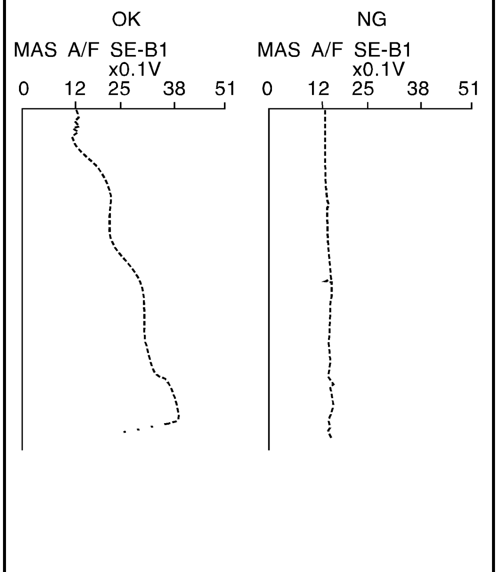

SEF243Y

7. Maintain the following conditions for at least 10 consecutive seconds.

ENG SPEED	More than 2,000 rpm
THRTL SEN 1	More than 3V
THRTL SEN 2	More than 3V
Shift lever	Suitable position
Driving location	Driving vehicle uphill (Increased engine load) will help maintain the driving conditions required for this test.

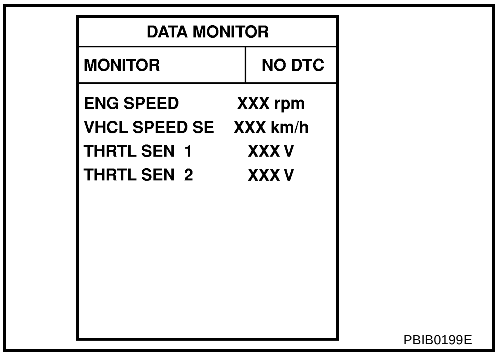

PBIB0199E

8. If 1st DTC is detected, go to EC-185, "Diagnostic Procedure" .

Overall Function Check

ABS00CML

PROCEDURE FOR MALFUNCTION B

Use this procedure to check the overall function of the mass air flow sensor circuit. During this check, a 1st tip DTC might not be confirmed.

With GST

1. Start engine and warm it up to normal operating temperature.
2. Select Service $01 with GST.
3. Check the mass air flow sensor signal with Service $01.
4. Check for linear mass air flow sensor signal value rise in response to increases to about 4,000 rpm in engine speed.
5. If NG, go to EC-185, "Diagnostic Procedure" .

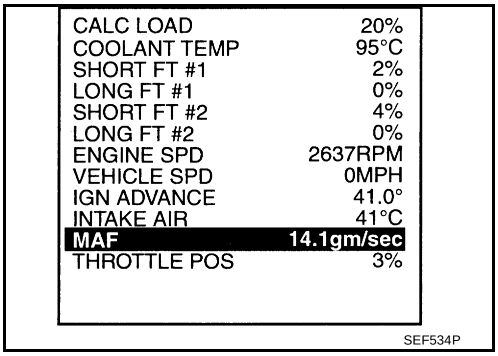

SEF534P

Wiring Diagram

ABS00CMM

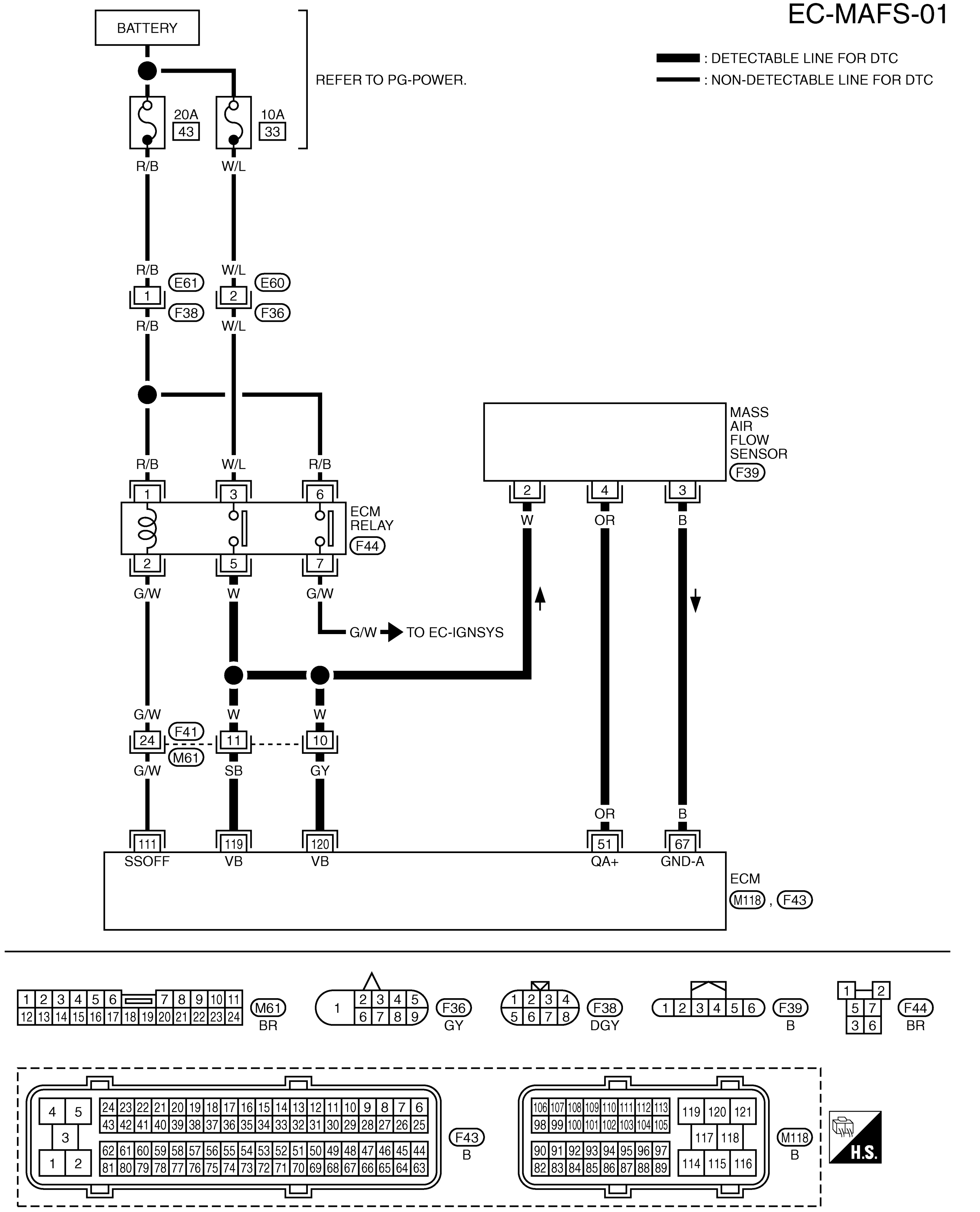

TBWB0111E

Specification data are reference values and are measured between each terminal and ground.

CAUTION:

Do not use ECM ground terminals when measuring input/output voltage. Doing so may result in damage to the ECM's transistor. Use a ground other than ECM terminals, such as the ground.

TERMINAL NO.	WIRE COLOR	ITEM	CONDITION	DATA (DC Voltage)
51	OR	Mass air flow sensor	**[Engine is running]** ● **Warm-up condition** ● Idle speed	0.9 - 1.1V
			[Engine is running] ● **Warm-up condition** ● Engine speed is 2,500 rpm.	1.6 - 1.9V
67	B	Sensor ground	**[Engine is running]** ● **Warm-up condition** ● Idle speed	Approximately 0V
111	G/W	ECM relay (Self shut-off)	**[Engine is running]** **[Ignition switch: OFF]** ● A few seconds after turning ignition switch OFF	0 - 1.0V
			[Ignition switch: OFF] ● More than a few seconds after turning ignition switch OFF	BATTERY VOLTAGE (11 - 14V)
119 120	SB GY	Power supply for ECM	**[Ignition switch: ON]**	BATTERY VOLTAGE (11 - 14V)

Diagnostic Procedure

ABS00CMN

1. INSPECTION START

Which malfunction (A or B) is duplicated?

A or B

A >> GO TO 3.
B >> GO TO 2.

2. CHECK INTAKE AIR LEAK

Check the following for connections.

- Air duct
- Vacuum hoses
- Intake air passage between air duct and intake manifold

OK or NG

OK >> GO TO 3.
NG >> Reconnect the parts.

3. CHECK GROUND CONNECTIONS

1. Turn ignition switch OFF.
2. Loosen and retighten three ground screws on the body. Refer to EC-161, "Ground Inspection" .

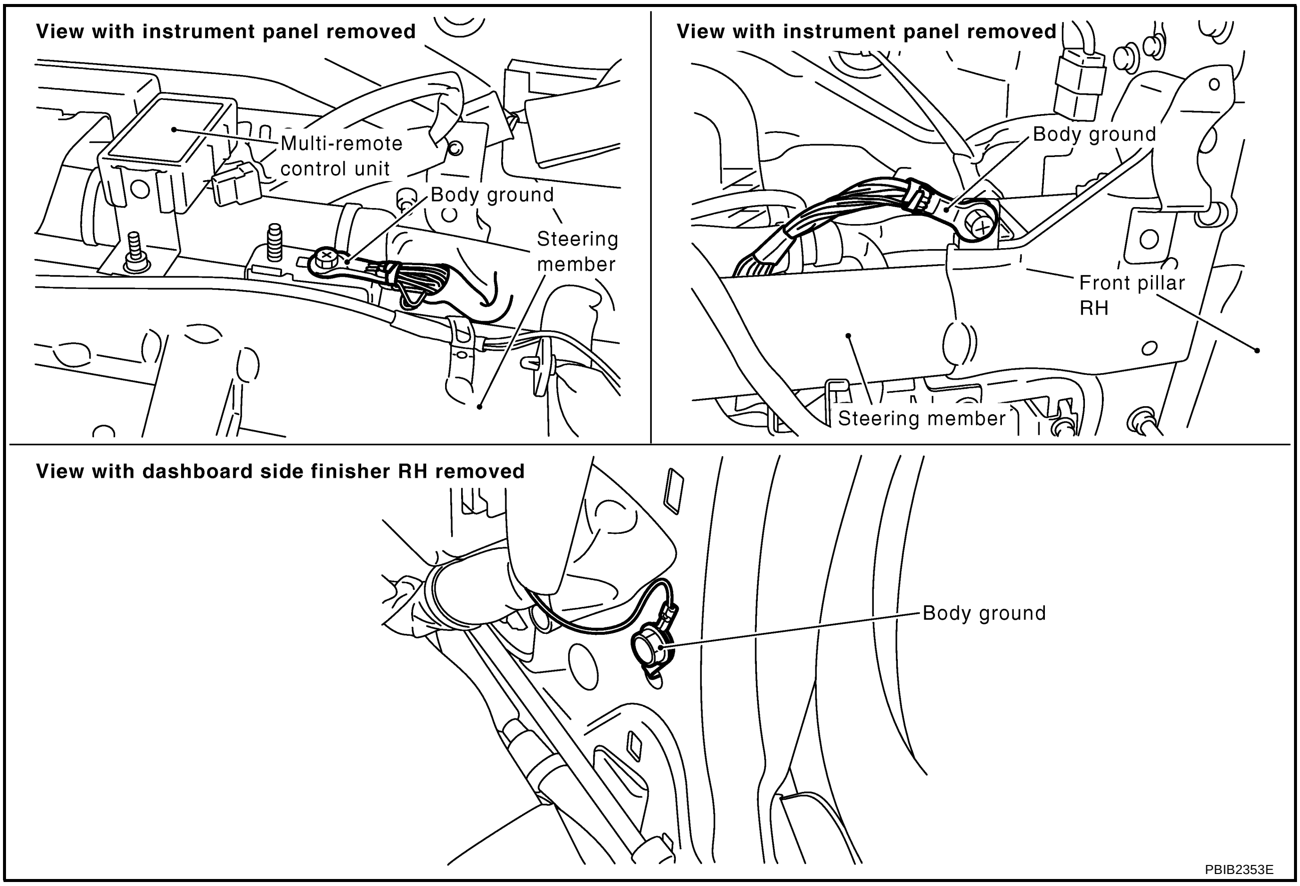

OK or NG

OK >> GO TO 4.
NG >> Repair or replace ground connections.

4. CHECK MAF SENSOR POWER SUPPLY CIRCUIT

1. Disconnect mass air flow (MAF) sensor harness connector.
2. Turn ignition switch ON.

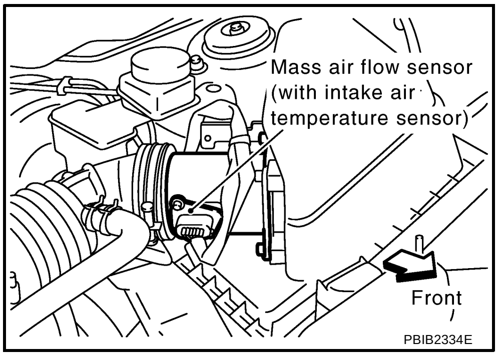

3. Check voltage between MAF sensor terminal 2 and ground with CONSULT-II or tester.

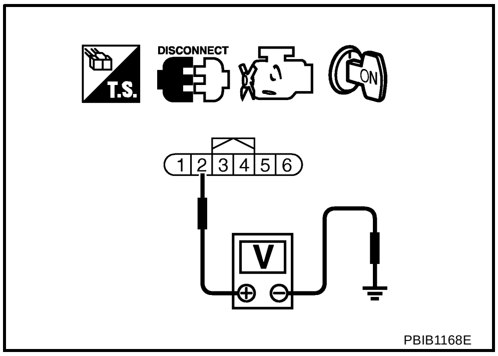

Voltage: Battery voltage

OK or NG

OK >> GO TO 6.
NG >> GO TO 5.

5. DETECT MALFUNCTIONING PART

Check the following.

- Harness connectors F41, M61
- Harness for open or short between MAF sensor and ECM relay
- Harness for open or short between MAF sensor and ECM

>> Repair open circuit or short to ground or short to power in harness or connectors.

6. CHECK MAF SENSOR GROUND CIRCUIT FOR OPEN AND SHORT

1. Turn ignition switch OFF.
2. Disconnect ECM harness connector.
3. Check harness continuity between MAF sensor terminal 3 and ECM terminal 67.
   Refer to Wiring Diagram.

   Continuity should exist.

4. Also check harness for short to ground and short to power.

OK or NG

OK >> GO TO 7.
NG >> Repair open circuit or short to ground or short to power in harness or connectors.

7. CHECK MAF SENSOR INPUT SIGNAL CIRCUIT FOR OPEN AND SHORT

1. Check harness continuity between MAF sensor terminal 4 and ECM terminal 51.
   Refer to Wiring Diagram.

   Continuity should exist.

2. Also check harness for short to ground and short to power.

OK or NG

OK >> GO TO 8.
NG >> Repair open circuit or short to ground or short to power in harness or connectors.

8. CHECK INTAKE AIR TEMPERATURE SENSOR

Refer to EC-203, "Component Inspection" .

OK or NG

OK >> GO TO 9.
NG >> Replace intake air temperature sensor.

9. CHECK EVAP CONTROL SYSTEM PRESSURE SENSOR

Refer to EC-364, "Component Inspection" .

OK or NG

OK >> GO TO 10.
NG >> Replace EVAP control system pressure sensor.

10. CHECK MASS AIR FLOW SENSOR

Refer to EC-188, "Component Inspection" .

OK or NG

OK >> GO TO 11.
NG >> Replace mass air flow sensor.

11. CHECK INTERMITTENT INCIDENT

Perform EC-153, "TROUBLE DIAGNOSIS FOR INTERMITTENT INCIDENT" .

>> **INSPECTION END**

Component Inspection

ABS00CMO

MASS AIR FLOW SENSOR

With CONSULT-II

1. Reconnect all harness connectors disconnected.
2. Start engine and warm it up to normal operating temperature.
3. Connect CONSULT-II and select “DATA MONITOR” mode.
4. Select “MAS A/F SE-B1” and check indication under the following conditions.

Condition	MAS A/F SE-B1 (V)
Ignition switch ON (Engine stopped.)	Approx. 0.4
Idle (Engine is warmed-up to normal operating temperature.)	0.9 - 1.1
2,500 rpm (Engine is warmed-up to normal operating temperature.)	1.6 - 1.9
Idle to about 4,000 rpm*	0.9 - 1.1 to Approx. 2.4

*: Check for linear voltage rise in response to engine being increased to about 4,000 rpm.

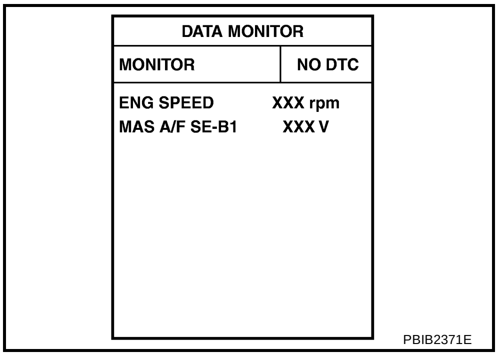

A
EC
C
D
E
F
G
H
I
J
K
L
M

5. If the voltage is out of specification, proceed the following.
a. Check for the cause of uneven air flow through mass air flow sensor. Refer to following.
   - Crushed air ducts
   - Malfunctioning seal of air cleaner element
   - Uneven dirt of air cleaner element
   - Improper specification of intake air system parts
b. If NG, repair or replace malfunctioning part and perform step 2 to 4 again.
   If OK, go to next step.
6. Turn ignition switch OFF.
7. Disconnect mass air flow sensor harness connector and reconnect it again.
8. Perform step 2 to 4 again.
9. If NG, clean or replace mass air flow sensor.

Without CONSULT-II

1. Reconnect all harness connectors disconnected.
2. Start engine and warm it up to normal operating temperature.
3. Check voltage between ECM terminal 51 (Mass air flow sensor signal) and ground.

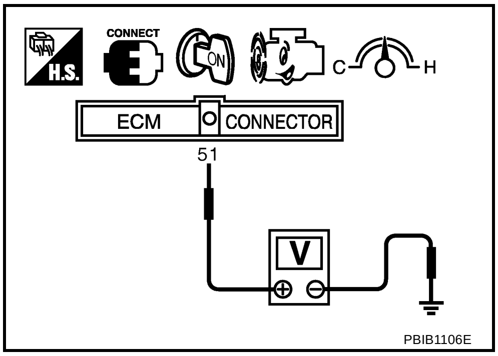

Condition	Voltage V
Ignition switch ON (Engine stopped.)	Approx. 0.4
Idle (Engine is warmed-up to normal operating temperature.)	0.9 - 1.1
2,500 rpm (Engine is warmed-up to normal operating temperature.)	1.6 - 1.9
Idle to about 4,000 rpm*	0.9 - 1.1 to Approx. 2.4

*: Check for linear voltage rise in response to engine being increased to about 4,000 rpm.

4. If the voltage is out of specification, proceed the following.
a. Check for the cause of uneven air flow through mass air flow sensor. Refer to following.
   - Crushed air ducts
   - Malfunctioning seal of air cleaner element
   - Uneven dirt of air cleaner element
   - Improper specification of intake air system parts
b. If NG, repair or replace malfunctioning part and perform step 2 to 3 again.
   If OK, go to next step.
5. Turn ignition switch OFF.
6. Disconnect mass air flow sensor harness connector and reconnect it again.
7. Perform step 2 and 3 again.
8. If NG, clean or replace mass air flow sensor.

Removal and Installation

ABS00CMP

MASS AIR FLOW SENSOR

Refer to EM-14, "AIR CLEANER AND AIR DUCT" .

DTC P0102, P0103 MAF SENSOR

PFP:22680

Component Description

ABS00CMQ

The mass air flow sensor is placed in the stream of intake air. It measures the intake flow rate by measuring a part of the entire intake flow. The mass air flow sensor controls the temperature of the hot wire to a certain amount. The heat generated by the hot wire is reduced as the intake air flows around it. The more air, the greater the heat loss.
Therefore, the electric current supplied to hot wire is changed to maintain the temperature of the hot wire as air flow increases. The ECM detects the air flow by means of this current change.

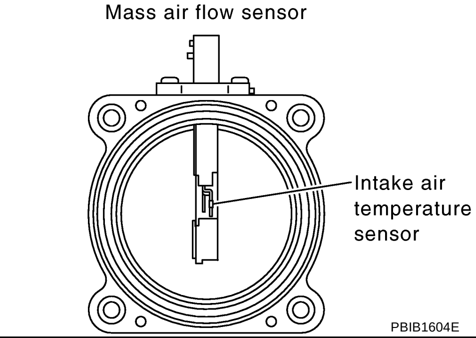

PBIB1604E

CONSULT-II Reference Value in Data Monitor Mode

ABS00CMR

Specification data are reference values.

MONITOR ITEM	CONDITION		SPECIFICATION
MAS A/F SE-B1	See EC-143, "TROUBLE DIAGNOSIS - SPECIFICATION VALUE" .		
CAL/LD VALUE	● Engine: After warming up ● Shift lever: P or N (A/T), Neutral (M/T) ● Air conditioner switch: OFF ● No-load	Idle	10% - 35%
		2,500 rpm	10% - 35%
MASS AIRFLOW	● Engine: After warming up ● Shift lever: P or N (A/T), Neutral (M/T) ● Air conditioner switch: OFF ● No-load	Idle	1.0 - 4.0 g·m/s
		2,500 rpm	4.0 - 10.0 g·m/s

On Board Diagnosis Logic

ABS00CMS

These self-diagnoses have the one trip detection logic.

DTC No.	Trouble diagnosis name	DTC detecting condition	Possible cause
P0102 0102	Mass air flow sensor circuit low input	An excessively low voltage from the sensor is sent to ECM.	● Harness or connectors (The sensor circuit is open or shorted.) ● Intake air leaks ● Mass air flow sensor
P0103 0103	Mass air flow sensor circuit high input	An excessively high voltage from the sensor is sent to ECM.	● Harness or connectors (The sensor circuit is open or shorted.) ● Mass air flow sensor

FAIL-SAFE MODE

When the malfunction is detected, the ECM enters fail-safe mode and the MIL lights up.

Detected items	Engine operating condition in fail-safe mode
Mass air flow sensor circuit	Engine speed will not rise more than 2,400 rpm due to the fuel cut.

DTC Confirmation Procedure

ABS00CMT

NOTE:
If DTC Confirmation Procedure has been previously conducted, always turn ignition switch OFF and wait at least 10 seconds before conducting the next test.

A EC C D E F G H I J K L M

PROCEDURE FOR DTC P0102

With CONSULT-II

1. Turn ignition switch ON.
2. Select “DATA MONITOR” mode with CONSULT-II.
3. Start engine and wait at least 5 seconds.
4. If DTC is detected, go to EC-193, "Diagnostic Procedure" .

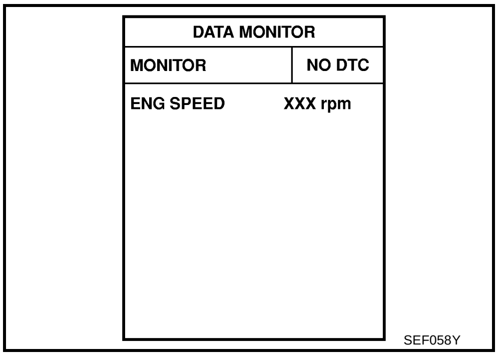

SEF058Y

With GST

Follow the procedure “With CONSULT-II” above.

PROCEDURE FOR DTC P0103

With CONSULT-II

1. Turn ignition switch ON.
2. Select “DATA MONITOR” mode with CONSULT-II.
3. Wait at least 5 seconds.
4. If DTC is detected, go to EC-193, "Diagnostic Procedure" .
   If DTC is not detected, go to next step.
5. Start engine and wait at least 5 seconds.
6. If DTC is detected, go to EC-193, "Diagnostic Procedure" .

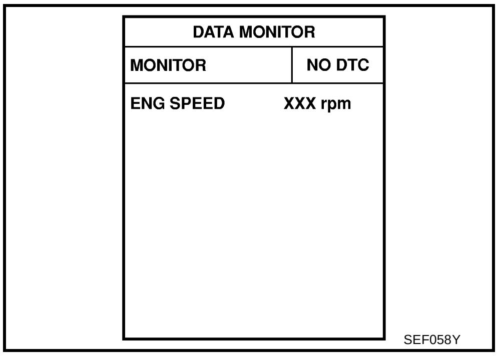

SEF058Y

With GST

Follow the procedure “With CONSULT-II” above.

Wiring Diagram

ABS00CMU

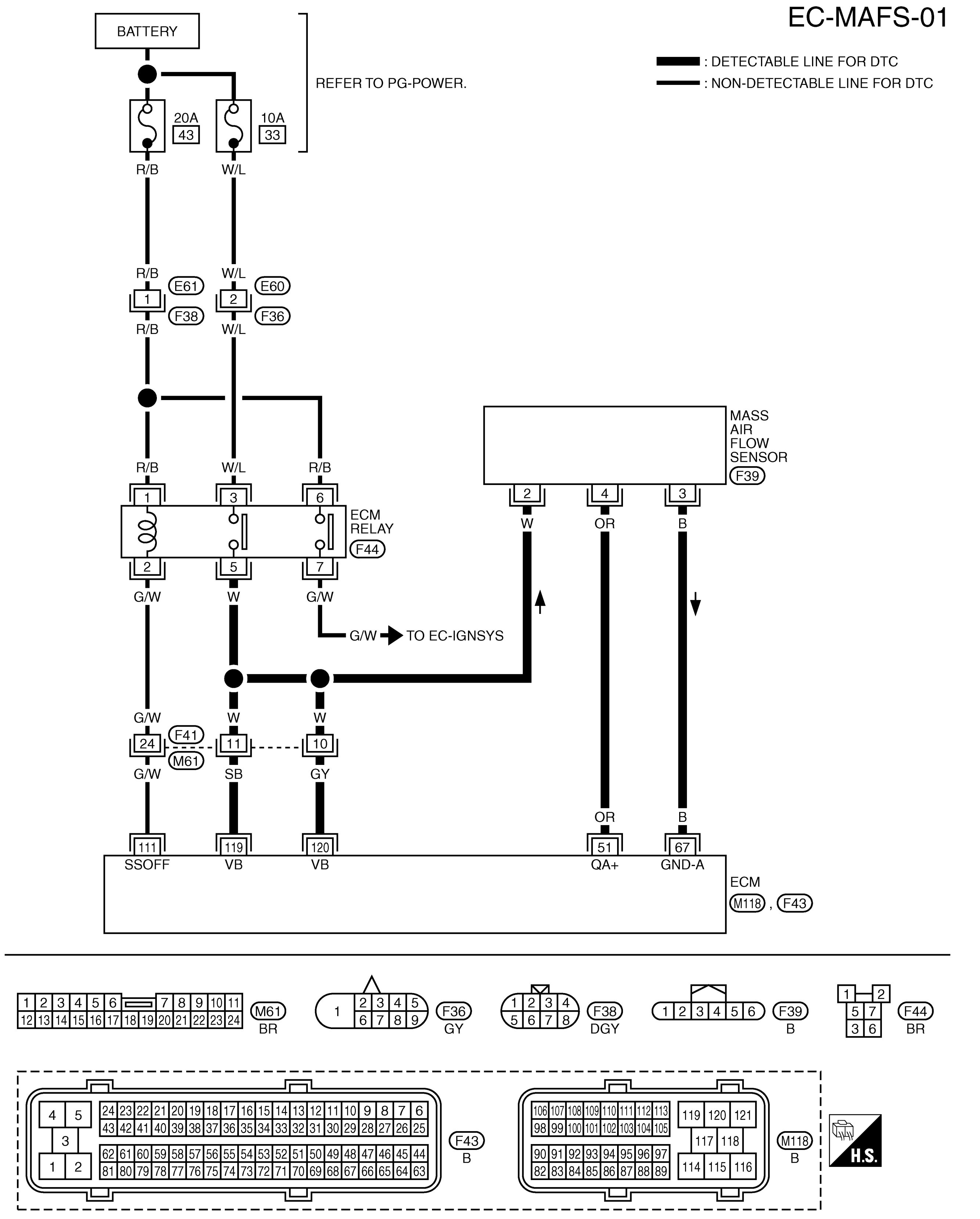

Specification data are reference values and are measured between each terminal and ground.

CAUTION:

Do not use ECM ground terminals when measuring input/output voltage. Doing so may result in damage to the ECM's transistor. Use a ground other than ECM terminals, such as the ground.

TERMINAL NO.	WIRE COLOR	ITEM	CONDITION	DATA (DC Voltage)
51	OR	Mass air flow sensor	**[Engine is running]** ● **Warm-up condition** ● Idle speed	0.9 - 1.1V
			[Engine is running] ● **Warm-up condition** ● Engine speed is 2,500 rpm.	1.6 - 1.9V
67	B	Sensor ground	**[Engine is running]** ● **Warm-up condition** ● Idle speed	Approximately 0V
111	G/W	ECM relay (Self shut-off)	**[Engine is running]** **[Ignition switch: OFF]** ● A few seconds after turning ignition switch OFF	0 - 1.0V
			[Ignition switch: OFF] ● More than a few seconds after turning ignition switch OFF	BATTERY VOLTAGE (11 - 14V)
119 120	SB GY	Power supply for ECM	**[Ignition switch: ON]**	BATTERY VOLTAGE (11 - 14V)

Diagnostic Procedure

ABS00D84

1. INSPECTION START

Which malfunction (P0102 or P0103) is duplicated?

P0102 or P0103

P0102 >> GO TO 2.
P0103 >> GO TO 3.

2. CHECK INTAKE SYSTEM

Check the following for connection.

- Air duct
- Vacuum hoses
- Intake air passage between air duct to intake manifold

OK or NG

OK >> GO TO 3.
NG >> Reconnect the parts.

A EC C D E F G H I J K L M

3. CHECK GROUND CONNECTIONS

1. Turn ignition switch OFF.
2. Loosen and retighten ground three screws on the body.
   Refer to EC-161, "Ground Inspection" .

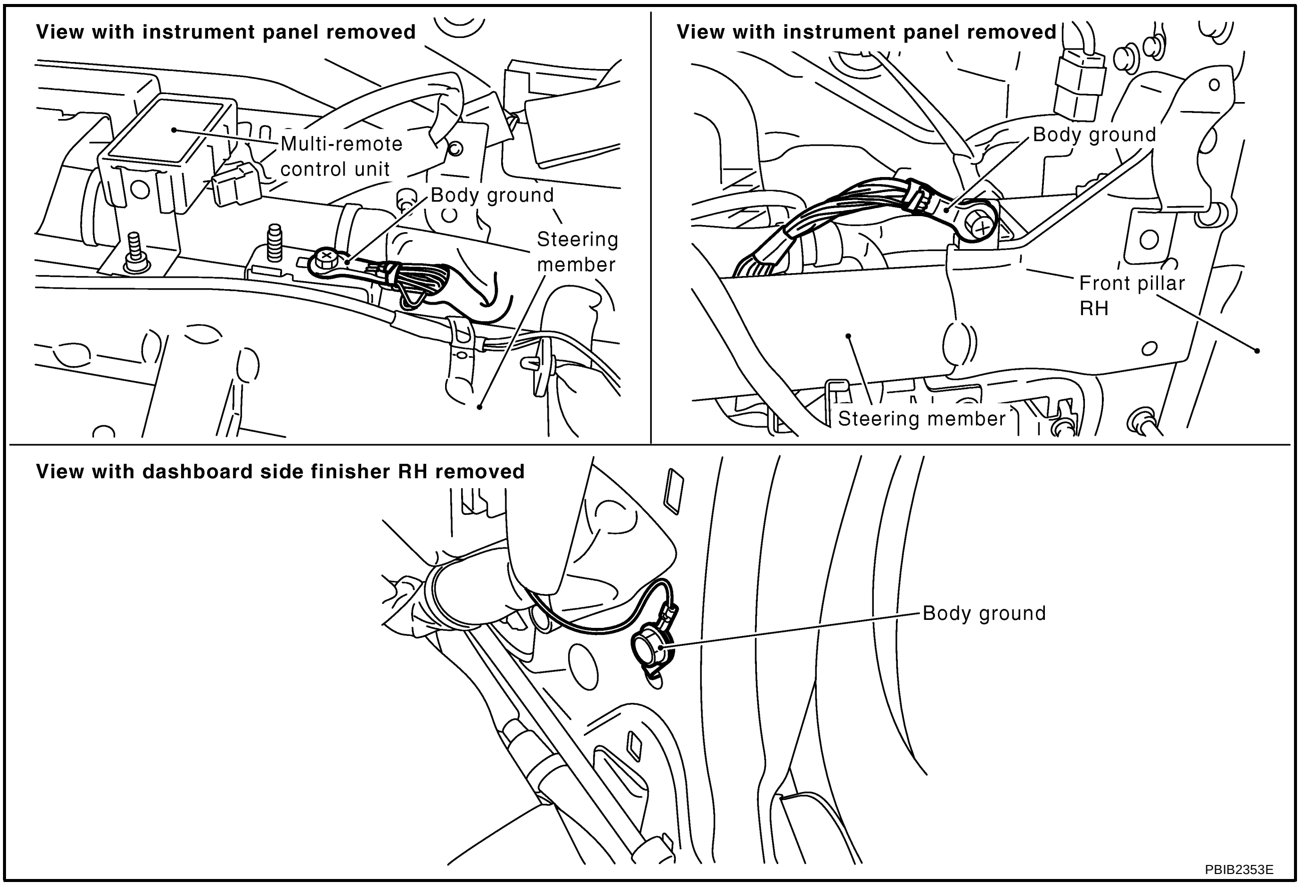

OK or NG

OK >> GO TO 4.

NG >> Repair or replace ground connections.

4. CHECK MAF SENSOR POWER SUPPLY CIRCUIT

1. Disconnect mass air flow (MAF) sensor harness connector.
2. Turn ignition switch ON.

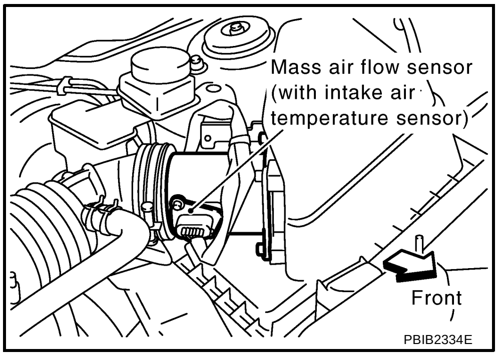

3. Check voltage between MAF sensor terminals 2 and ground with CONSULT-II or tester.

Voltage: Battery voltage

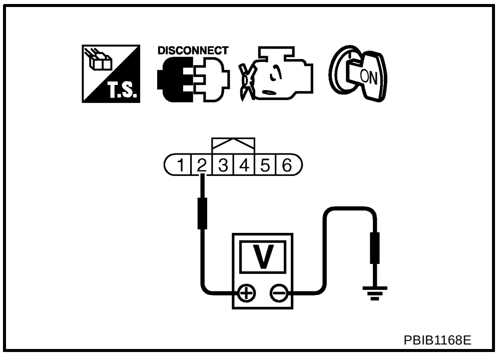

OK or NG

OK >> GO TO 6.
NG >> GO TO 5.

5. DETECT MALFUNCTIONING PART

Check the following.

- Harness connectors F41, M61
- Harness for open or short between MAF sensor and ECM
- Harness for open or short between MAF sensor and ECM relay

>> Repair open circuit or short to ground or short to power in harness or connectors.

6. CHECK MAF SENSOR GROUND CIRCUIT FOR OPEN AND SHORT

1. Turn ignition switch OFF.
2. Disconnect ECM harness connector.
3. Check harness continuity between MAF sensor terminal 3 and ECM terminal 67.
   Refer to Wiring Diagram.

Continuity should exist.

4. Also check harness for short to ground and short to power.

OK or NG

OK >> GO TO 7.
NG >> Repair open circuit or short to ground or short to power in harness or connectors.

7. CHECK MAF SENSOR INPUT SIGNAL CIRCUIT FOR OPEN AND SHORT

1. Check harness continuity between MAF sensor terminal 4 and ECM terminal 51.
   Refer to Wiring Diagram.

   Continuity should exist.

2. Also check harness for short to ground and short to power.

OK or NG

OK >> GO TO 8.
NG >> Repair open circuit or short to ground or short to power in harness or connectors.

8. CHECK MASS AIR FLOW SENSOR

Refer to EC-196, "Component Inspection" .

OK or NG

OK >> GO TO 9.
NG >> Replace mass air flow sensor.

9. CHECK INTERMITTENT INCIDENT

Refer to EC-153, "TROUBLE DIAGNOSIS FOR INTERMITTENT INCIDENT" .

>> **INSPECTION END**

Component Inspection

ABS00CMW

MASS AIR FLOW SENSOR

With CONSULT-II

1. Reconnect all harness connectors disconnected.
2. Start engine and warm it up to normal operating temperature.
3. Connect CONSULT-II and select “DATA MONITOR” mode.
4. Select “MAS A/F SE-B1” and check indication under the following conditions.

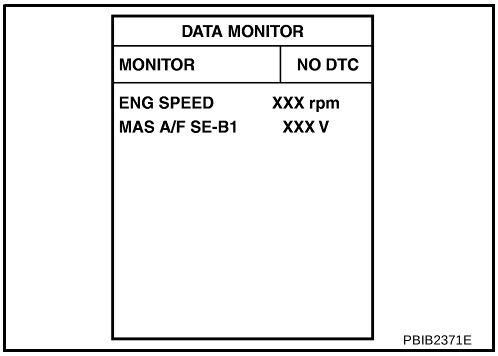

PBIB2371E

Condition	MAS A/F SE-B1 (V)
Ignition switch ON (Engine stopped.)	Approx. 0.4
Idle (Engine is warmed-up to normal operating temperature.)	0.9 - 1.1
2,500 rpm (Engine is warmed-up to normal operating temperature.)	1.6 - 1.9
Idle to about 4,000 rpm*	0.9 - 1.1 to Approx. 2.4

*: Check for linear voltage rise in response to engine being increased to about 4,000 rpm.

5. If the voltage is out of specification, proceed the following.

a. Check for the cause of uneven air flow through mass air flow sensor. Refer to following.
   - Crushed air ducts
   - Malfunctioning seal of air cleaner element
   - Uneven dirt of air cleaner element
   - Improper specification of intake air system parts

b. If NG, repair or replace malfunctioning part and perform step 2 to 4 again.
   If OK, go to next step.

6. Turn ignition switch OFF.
7. Disconnect mass air flow sensor harness connector and reconnect it again.
8. Perform step 2 to 4 again.
9. If NG, clean or replace mass air flow sensor.

Without CONSULT-II

1. Reconnect all harness connectors disconnected.
2. Start engine and warm it up to normal operating temperature.
3. Check voltage between ECM terminal 51 (Mass air flow sensor signal) and ground.

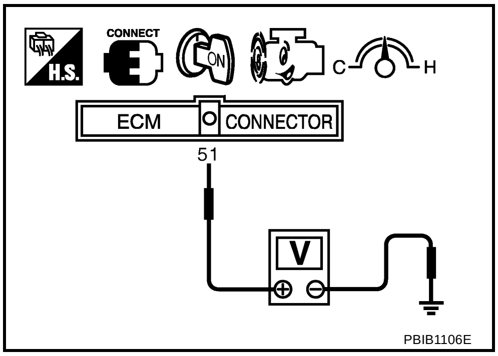

Condition	Voltage V
Ignition switch ON (Engine stopped.)	Approx. 0.4
Idle (Engine is warmed-up to normal operating temperature.)	0.9 - 1.1
2,500 rpm (Engine is warmed-up to normal operating temperature.)	1.6 - 1.9
Idle to about 4,000 rpm*	0.9 - 1.1 to Approx. 2.4

*: Check for linear voltage rise in response to engine being increased to about 4,000 rpm.

4. If the voltage is out of specification, proceed the following.

a. Check for the cause of uneven air flow through mass air flow sensor. Refer to following.
   - Crushed air ducts
   - Malfunctioning seal of air cleaner element
   - Uneven dirt of air cleaner element
   - Improper specification of intake air system parts

b. If NG, repair or replace malfunctioning part and perform step 2 to 3 again.
   If OK, go to next step.

5. Turn ignition switch OFF.
6. Disconnect mass air flow sensor harness connector and reconnect it again.
7. Perform step 2 and 3 again.
8. If NG, clean or replace mass air flow sensor.

Removal and Installation

ABS00CMX

MASS AIR FLOW SENSOR

Refer to EM-14, "AIR CLEANER AND AIR DUCT" .

DTC P0112, P0113 IAT SENSOR

PFP:22630

Component Description

ABS00CMY

The intake air temperature sensor is built into mass air flow sensor. The sensor detects intake air temperature and transmits a signal to the ECM.
The temperature sensing unit uses a thermistor which is sensitive to the change in temperature. Electrical resistance of the thermistor decreases in response to the temperature rise.

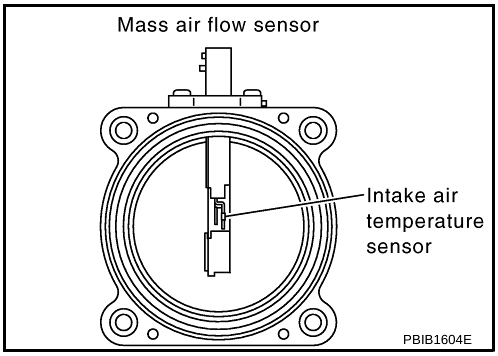

<Reference data>

Intake air temperature °C (°F)	Voltage* V	Resistance kΩ
25 (77)	3.32	1.94 - 2.06
80 (176)	1.23	0.295 - 0.349

*: This data is reference value and is measured between ECM terminal 34 (Intake air temperature sensor) and ground.

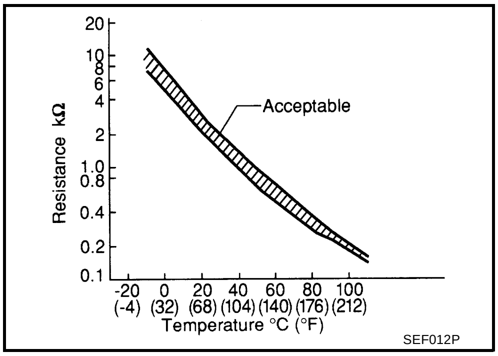

CAUTION:
Do not use ECM ground terminals when measuring input/output voltage. Doing so may result in damage to the ECM's transistor. Use a ground other than ECM terminals, such as the ground.

On Board Diagnosis Logic

ABS00CMZ

DTC No.	Trouble diagnosis name	DTC detecting condition	Possible cause
P0112 0112	Intake air temperature sensor circuit low input	An excessively low voltage from the sensor is sent to ECM.	● Harness or connectors (The sensor circuit is open or shorted.) ● Intake air temperature sensor
P0113 0113	Intake air temperature sensor circuit high input	An excessively low voltage from the sensor is sent to ECM.	

DTC Confirmation Procedure

ABS00CN0

NOTE:
If DTC Confirmation Procedure has been previously conducted, always turn ignition switch OFF and wait at least 10 seconds before conducting the next test.

WITH CONSULT-II

1. Turn ignition switch ON.
2. Select “DATA MONITOR” mode with CONSULT-II.
3. Wait at least 5 seconds.
4. If 1st trip DTC is detected, go to EC-201, "Diagnostic Procedure".

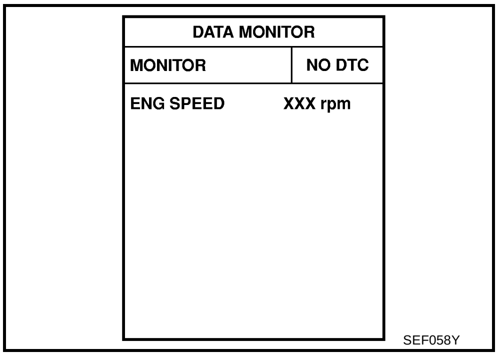

WITH GST

Follow the procedure “WITH CONSULT-II” above.

Wiring Diagram

ABS00CN1

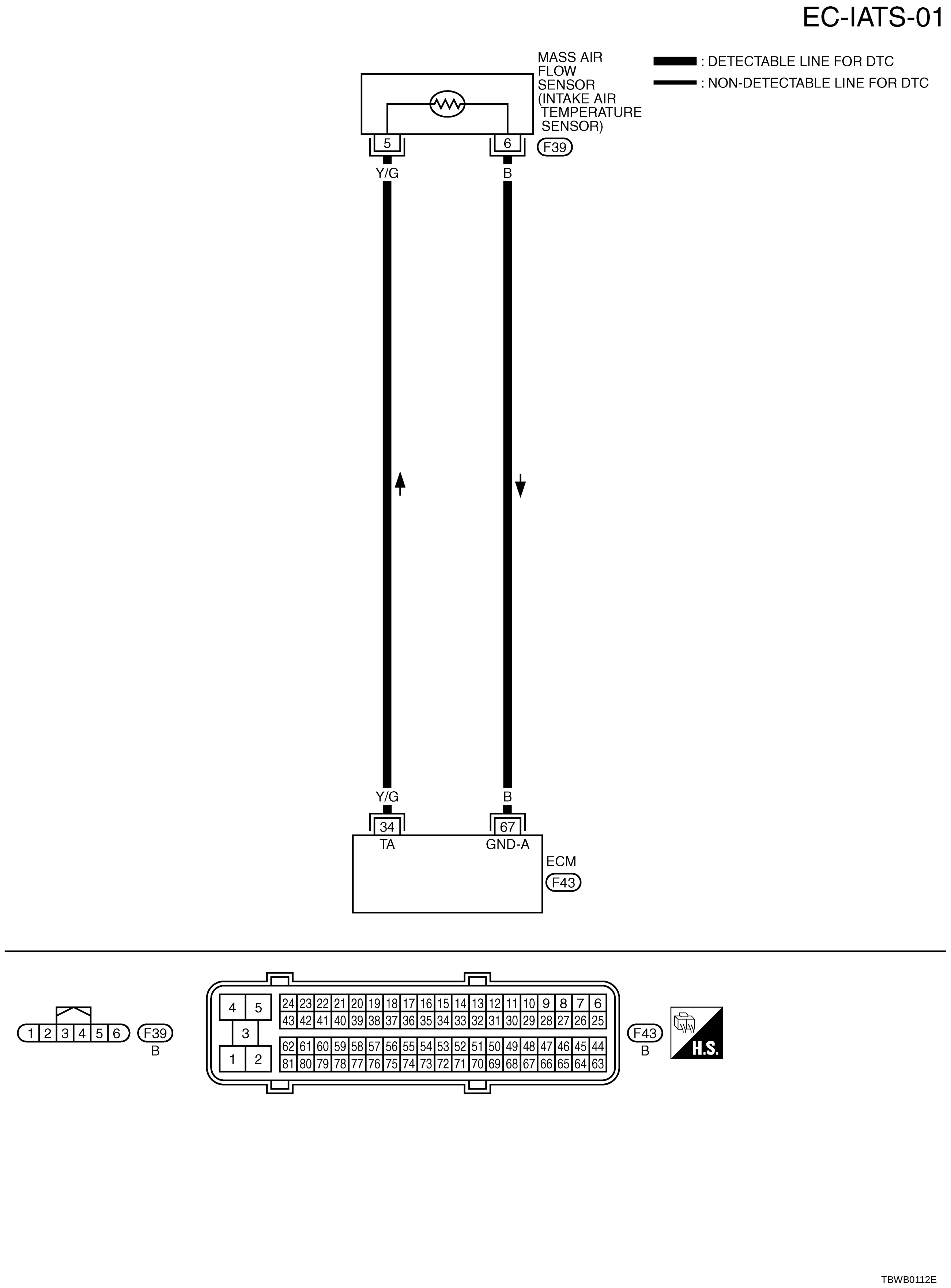

Diagnostic Procedure

ABS00D85

1. CHECK GROUND CONNECTIONS

1. Turn ignition switch OFF.
2. Loosen and retighten ground three screws on the body.
   Refer to EC-161, "Ground Inspection" .

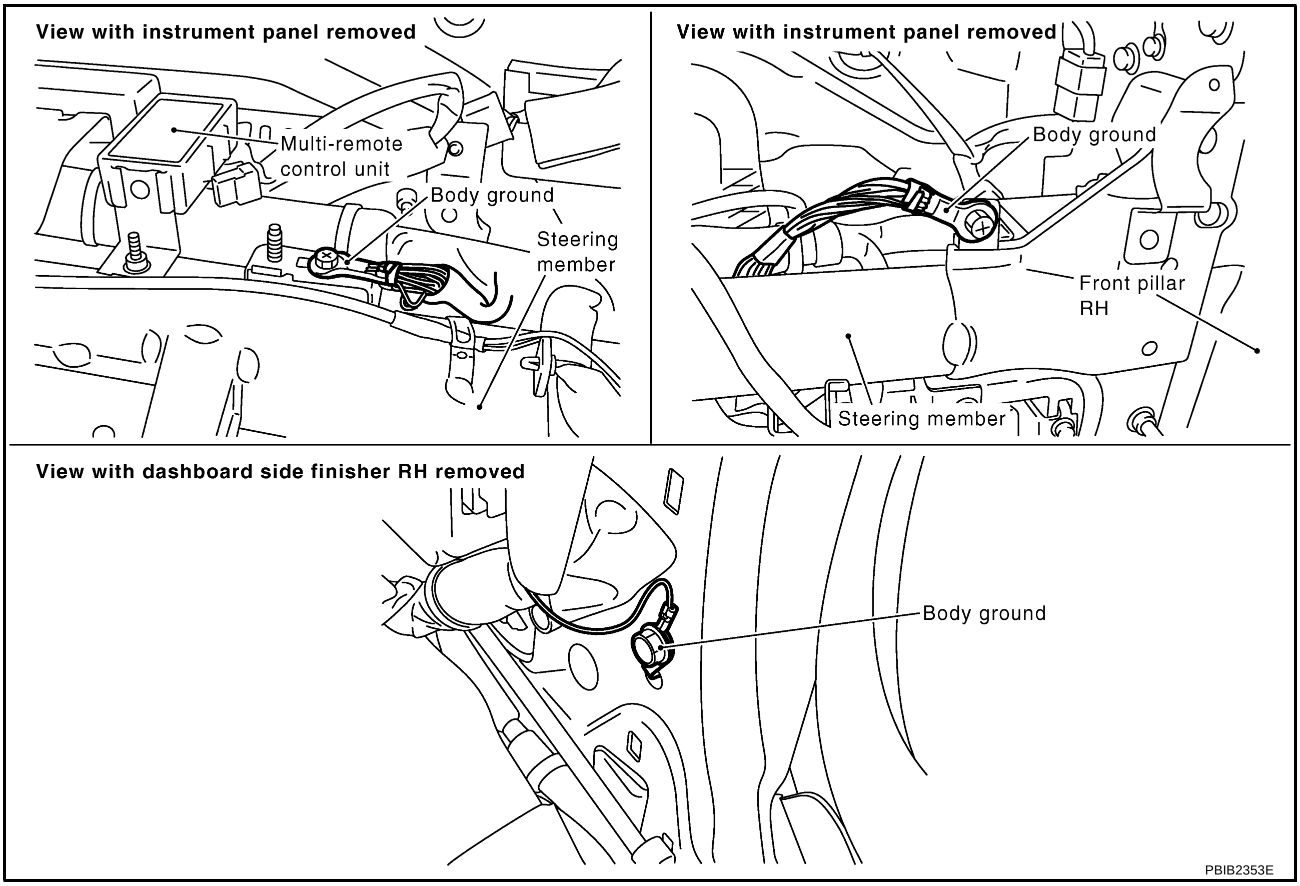

OK or NG

OK >> GO TO 2.
NG >> Repair or replace ground connections.

A
EC
C
D
E
F
G
H
I
J
K
L
M

2. CHECK INTAKE AIR TEMPERATURE SENSOR POWER SUPPLY CIRCUIT

1. Disconnect mass air flow (MAF) sensor (with intake air temperature sensor) harness connector.
2. Turn ignition switch ON.

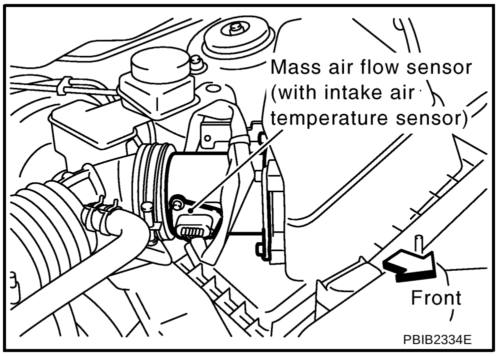

3. Check voltage between MAF sensor terminal 5 and ground with CONSULT-II or tester.

Voltage: Approximately 5V

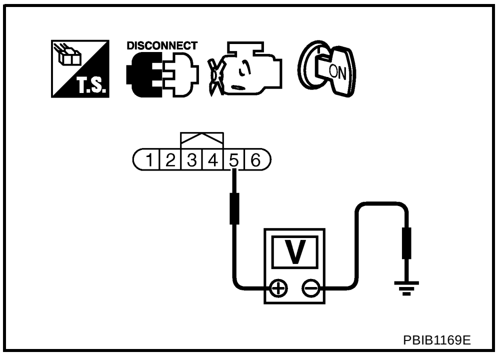

OK or NG

OK >> GO TO 3.
NG >> Repair open circuit or short to ground or short to power in harness or connectors.

3. CHECK INTAKE AIR TEMPERATURE SENSOR GROUND CIRCUIT FOR OPEN AND SHORT

1. Turn ignition switch OFF.
2. Disconnect ECM harness connector.
3. Check harness continuity between MAF sensor terminal 6 and ECM terminal 67.
   Refer to Wiring Diagram.

Continuity should exist.

4. Also check harness for short to ground and short to power.

OK or NG

OK >> GO TO 4.
NG >> Repair open circuit or short to ground or short to power in harness or connectors.

4. CHECK INTAKE AIR TEMPERATURE SENSOR

Refer to EC-203, "Component Inspection" .

OK or NG

OK >> GO TO 5.
NG >> Replace MAF sensor (with intake air temperature sensor).

5. CHECK INTERMITTENT INCIDENT

Refer to EC-153, "TROUBLE DIAGNOSIS FOR INTERMITTENT INCIDENT" .

>> **INSPECTION END**

Component Inspection

ABS00CN3

INTAKE AIR TEMPERATURE SENSOR

1. Check resistance between intake air temperature sensor terminals 5 and 6 under the following conditions.

Intake air temperature °C (°F)	Resistance kΩ
25 (77)	1.94 - 2.06

2. If NG, replace mass air flow sensor (with intake air temperature sensor).

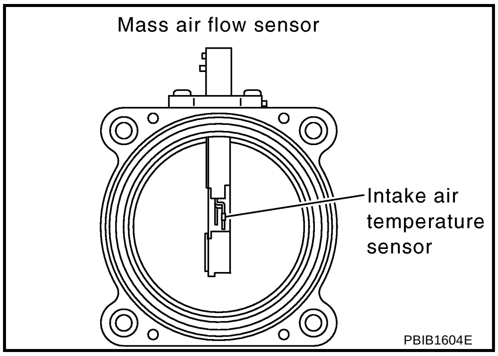

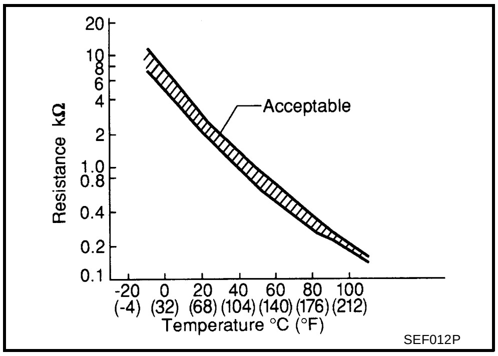

Removal and Installation

ABS00CN4

MASS AIR FLOW SENSOR

Refer to EM-14, "AIR CLEANER AND AIR DUCT" .

DTC P0117, P0118 ECT SENSOR

PFP:22630

Component Description

ABS00CN5

The engine coolant temperature sensor is used to detect the engine coolant temperature. The sensor modifies a voltage signal from the ECM. The modified signal returns to the ECM as the engine coolant temperature input. The sensor uses a thermistor which is sensitive to the change in temperature. The electrical resistance of the thermistor decreases as temperature increases.

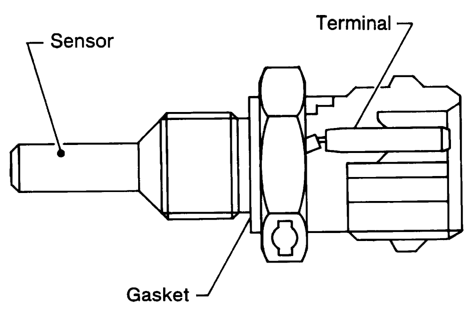

SEF594K

<Reference data>

Engine coolant temperature °C (°F)	Voltage* V	Resistance kΩ
–10 (14)	4.4	7.0 - 11.4
20 (68)	3.5	2.1 - 2.9
50 (122)	2.2	0.68 - 1.00
90 (194)	0.9	0.236 - 0.260

*: This data is reference value and is measured between ECM terminal 73 (Engine coolant temperature sensor) and ground.

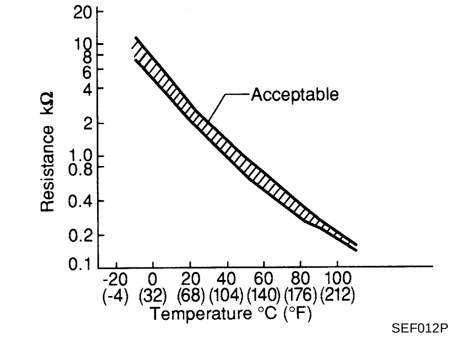

SEF012P

CAUTION:

Do not use ECM ground terminals when measuring input/output voltage. Doing so may result in damage to the ECM's transistor. Use a ground other than ECM terminals, such as the ground.

On Board Diagnosis Logic

ABS00CN6

These self-diagnoses have the one trip detection logic.

DTC No.	Trouble Diagnosis Name	DTC Detecting Condition	Possible Cause
P0117 0117	Engine coolant temperature sensor circuit low input	An excessively low voltage from the sensor is sent to ECM.	● Harness or connectors (The sensor circuit is open or shorted.) ● Engine coolant temperature sensor
P0118 0118	Engine coolant temperature sensor circuit high input	An excessively high voltage from the sensor is sent to ECM.	

FAIL-SAFE MODE

When this malfunction is detected, the ECM enters fail-safe mode and the MIL lights up.

<table>
<tr><th>Detected items</th><th colspan="2">Engine operating condition in fail-safe mode</th></tr>
<tr><td rowspan="6">Engine coolant temperature sensor circuit</td><td colspan="2">Engine coolant temperature will be determined by ECM based on the time after turning ignition switch ON or START.
CONSULT-II displays the engine coolant temperature decided by ECM.</td></tr>
<tr><td>Condition</td><td>Engine coolant temperature decided (CONSULT-II display)</td></tr>
<tr><td>Just as ignition switch is turned ON or START</td><td>40°C (104°F)</td></tr>
<tr><td>More than approx. 4 minutes after ignition ON or START</td><td>80°C (176°F)</td></tr>
<tr><td>Except as shown above</td><td>40 - 80°C (104 - 176°F)
(Depends on the time)</td></tr>
<tr><td colspan="2">When the fail-safe system for engine coolant temperature sensor is activated, the cooling fan operates while engine is running.</td></tr>
</table>

DTC Confirmation Procedure

ABS00CN7

NOTE:

If DTC Confirmation Procedure has been previously conducted, always turn ignition switch OFF and wait at least 10 seconds before conducting the next test.

WITH CONSULT-II

1. Turn ignition switch ON.
2. Select “DATA MONITOR” mode with CONSULT-II.
3. Wait at least 5 seconds.
4. If DTC is detected, go to EC-207, "Diagnostic Procedure" .

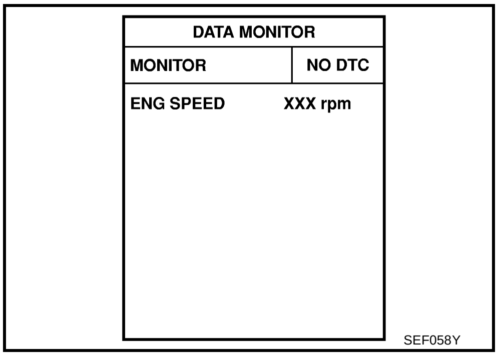

SEF058Y

WITH GST

Follow the procedure “WITH CONSULT-II” above.

Wiring Diagram

ABS00CN8

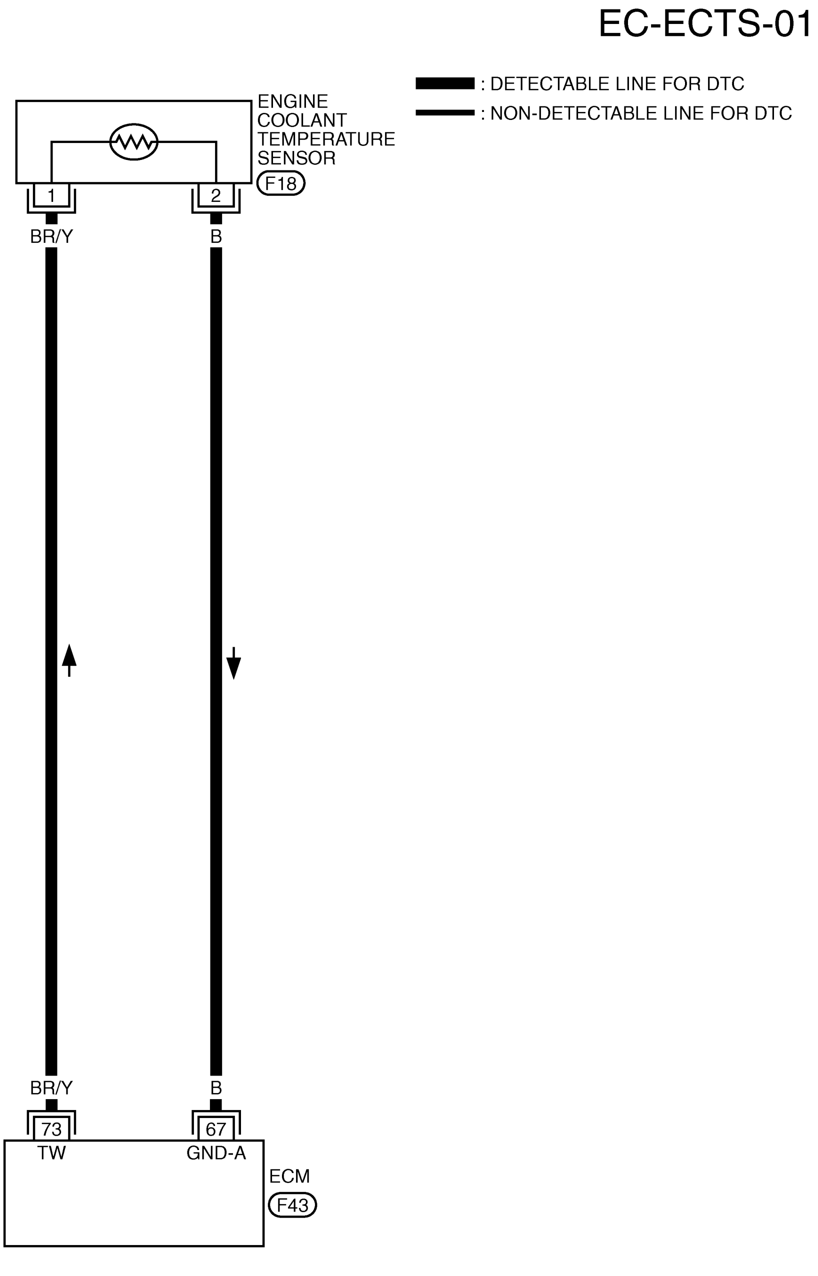

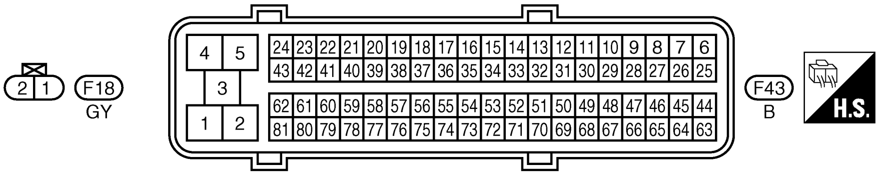

TBWB0113E

Diagnostic Procedure

ABS00D86

1. CHECK GROUND CONNECTIONS

1. Turn ignition switch OFF.
2. Loosen and retighten ground three screws on the body.
   Refer to EC-161, "Ground Inspection" .

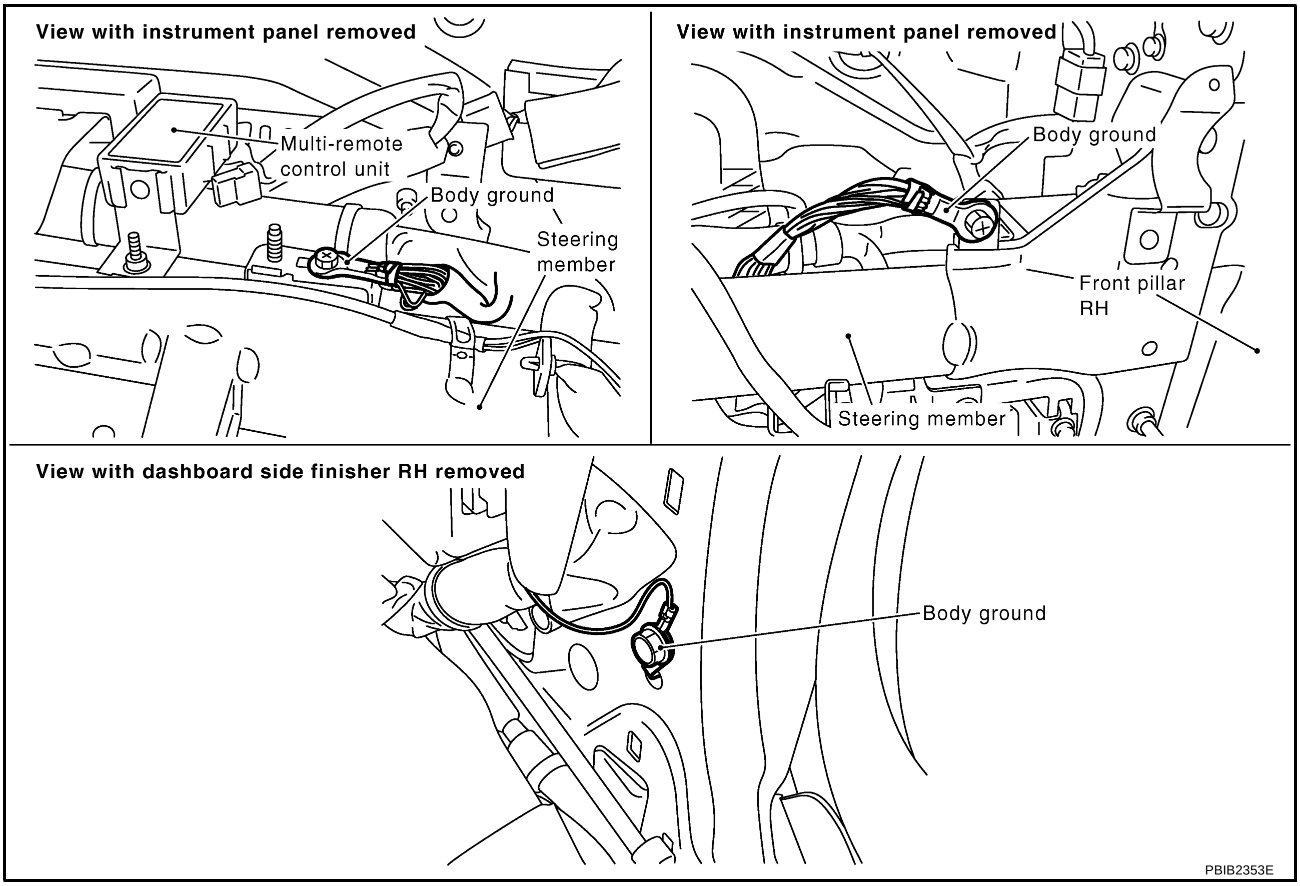

OK or NG

OK >> GO TO 2.
NG >> Repair or replace ground connections.

2. CHECK ECT SENSOR POWER SUPPLY CIRCUIT

1. Disconnect engine coolant temperature (ECT) sensor harness connector.
2. Turn ignition switch ON.

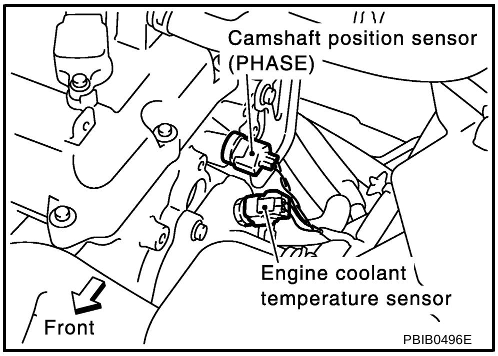

3. Check voltage between ECT sensor terminal 1 and ground with CONSULT-II or tester.

Voltage: Approximately 5V

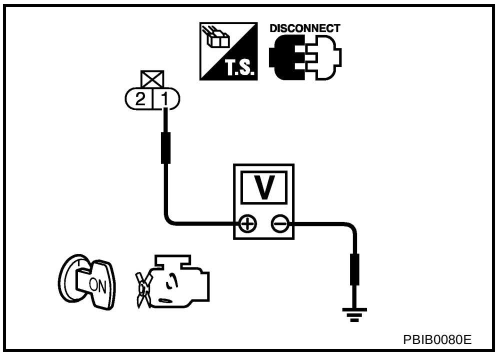

OK or NG

OK >> GO TO 3.
NG >> Repair open circuit or short to ground or short to power in harness or connectors.

3. CHECK ECT SENSOR GROUND CIRCUIT FOR OPEN AND SHORT

1. Turn ignition switch OFF.
2. Disconnect ECM harness connector.
3. Check harness continuity between ECT sensor terminal 2 and ECM terminal 67. Refer to Wiring Diagram.

Continuity should exist.

4. Also check harness for short to ground and short to power.

OK or NG

OK >> GO TO 4.
NG >> Repair open circuit or short to ground or short to power in harness or connectors.

4. CHECK ENGINE COOLANT TEMPERATURE SENSOR

Refer to EC-209, "Component Inspection" .

OK or NG

OK >> GO TO 5.
NG >> Replace engine coolant temperature sensor.

5. CHECK INTERMITTENT INCIDENT

Refer to EC-153, "TROUBLE DIAGNOSIS FOR INTERMITTENT INCIDENT" .

>> **INSPECTION END**

Component Inspection

ABS00CNA

ENGINE COOLANT TEMPERATURE SENSOR

1. Check resistance between engine coolant temperature sensor terminals 1 and 2 as shown in the figure.

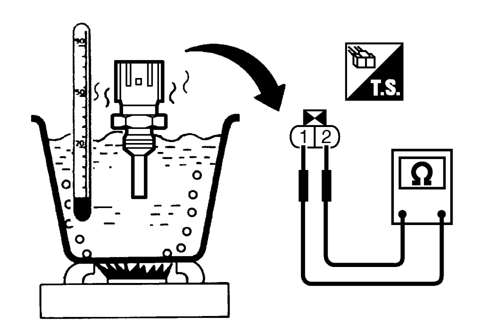

PBIB2005E

<Reference data>

Engine coolant temperature °C (°F)	Resistance kΩ
20 (68)	2.1 - 2.9
50 (122)	0.68 - 1.00
90 (194)	0.236 - 0.260

2. If NG, replace engine coolant temperature sensor.

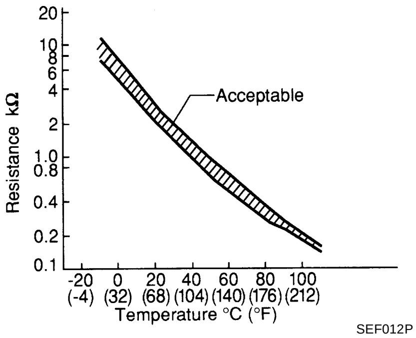

SEF012P

Removal and Installation

ABS00CNB

ENGINE COOLANT TEMPERATURE SENSOR

Refer to CO-22, "THERMOSTAT AND WATER CONTROL VALVE" .

DTC P0122, P0123 TP SENSOR

PFP:16119

Component Description

ABS00CNC

Electric throttle control actuator consists of throttle control motor, throttle position sensor, etc. The throttle position sensor responds to the throttle valve movement.
The throttle position sensor has two sensors. These sensors are a kind of potentiometers which transform the throttle valve position into output voltage, and emit the voltage signal to the ECM. In addition, these sensors detect the opening and closing speed of the throttle valve and feed the voltage signals to the ECM. The ECM judges the current opening angle of the throttle valve from these signals and the ECM controls the throttle control motor to make the throttle valve opening angle properly in response to driving condition.

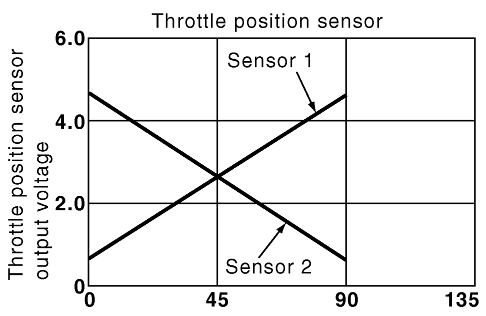

PBIB0145E

CONSULT-II Reference Value in Data Monitor Mode

ABS00CND

Specification data are reference values.

MONITOR ITEM	CONDITION		SPECIFICATION
THRTL SEN 1 THRTL SEN 2*	● Ignition switch: ON (Engine stopped) ● Shift lever: D (A/T), 1ST (M/T)	Accelerator pedal: Fully released	More than 0.36V
		Accelerator pedal: Fully depressed	Less than 4.75V

*: Throttle position sensor 2 signal is converted by ECM internally. thus it differs from ECM terminal voltage signal.

On Board Diagnosis Logic

ABS00CNE

These self-diagnoses have the one trip detection logic.

DTC No.	Trouble diagnosis name	DTC detecting condition	Possible cause
P0122 0122	Throttle position sensor 2 circuit low input	An excessively low voltage from the TP sensor 2 is sent to ECM.	● Harness or connectors (The TP sensor 2 circuit is open or shorted.) (The APP sensor 2 circuit is shorted.) ● Electric throttle control actuator (TP sensor 2) ● Accelerator pedal position sensor (APP sensor 2)
P0123 0123	Throttle position sensor 2 circuit high input	An excessively high voltage from the TP sensor 2 is sent to ECM.	

FAIL-SAFE MODE

When the malfunction is detected, the ECM enters fail-safe mode and the MIL lights up.

Engine operation condition in fail-safe mode
The ECM controls the electric throttle control actuator in regulating the throttle opening in order for the idle position to be within +10 degrees. The ECM regulates the opening speed of the throttle valve to be slower than the normal condition. So, the acceleration will be poor.

DTC Confirmation Procedure

ABS00CNF

NOTE:
If DTC Confirmation Procedure has been previously conducted, always turn ignition switch OFF and wait at least 10 seconds before conducting the next test.
TESTING CONDITION:
Before performing the following procedure, confirm that battery voltage is more than 10V at idle.

WITH CONSULT-II

1. Turn ignition switch ON.

2. Select “DATA MONITOR” mode with CONSULT-II.
3. Start engine and let it idle for 1 second.
4. If DTC is detected, go to EC-214, "Diagnostic Procedure" .

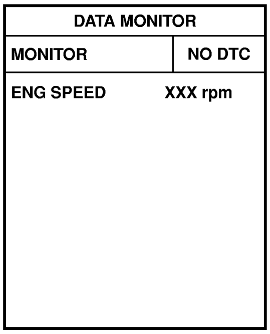

SEF058Y

WITH GST

Follow the procedure “WITH CONSULT-II” above.

Wiring Diagram

ABS00CNG

EC-TPS2-01

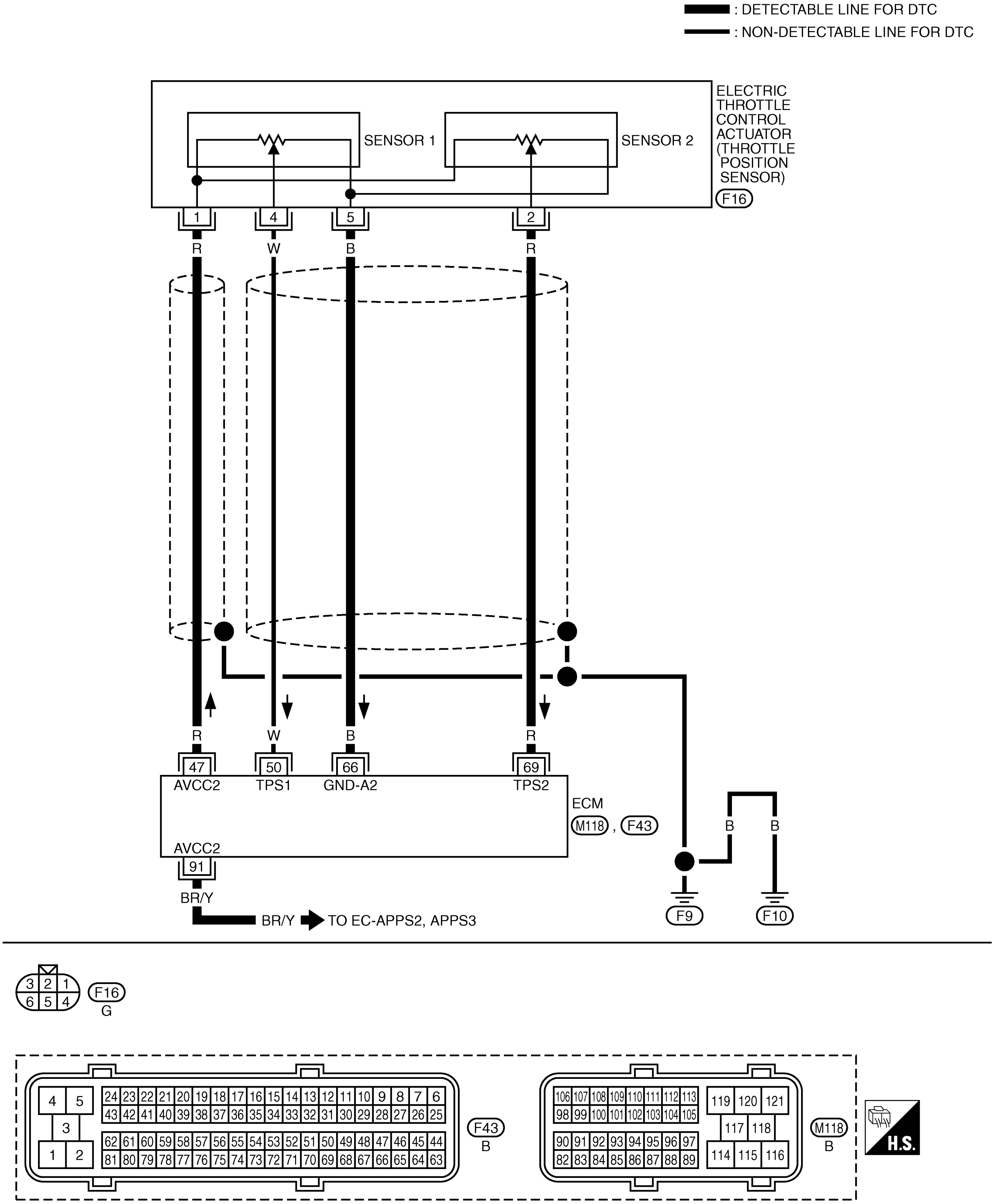

TBWB0114E

Specification data are reference values and are measured between each terminal and ground.

CAUTION:

Do not use ECM ground terminals when measuring input/output voltage. Doing so may result in damage to the ECM's transistor. Use a ground other than ECM terminals, such as the ground.

TER-MINAL NO.	WIRE COLOR	ITEM	CONDITION	DATA (DC Voltage)
47	R	Sensor power supply (Throttle position sensor)	**[Ignition switch: ON]**	Approximately 5V
50	W	Throttle position sensor 1	**[Ignition switch: ON]** ● Engine stopped ● Shift lever: D (A/T), 1ST (M/T) ● Accelerator pedal: Fully released	More than 0.36V
			[Ignition switch: ON] ● Engine stopped ● Shift lever: D (A/T), 1ST (M/T) ● Accelerator pedal: Fully depressed	Less than 4.75V
66	B	Sensor ground (Throttle position sensor)	**[Engine is running]** ● **Warm-up condition** ● Idle speed	Approximately 0V
69	R	Throttle position sensor 2	**[Ignition switch: ON]** ● Engine stopped ● Shift lever: D (A/T), 1ST (M/T) ● Accelerator pedal: Fully released	Less than 4.75V
			[Ignition switch: ON] ● Engine stopped ● Shift lever: D (A/T), 1ST (M/T) ● Accelerator pedal: Fully depressed	More than 0.36V
91	BR/Y	Sensor power supply (Accelerator pedal position sensor 2)	**[Ignition switch: ON]**	Approximately 5V

Diagnostic Procedure

ABS00D87

1. CHECK GROUND CONNECTIONS

1. Turn ignition switch OFF.
2. Loosen and retighten three ground screws on the body.
   Refer to EC-161, "Ground Inspection" .

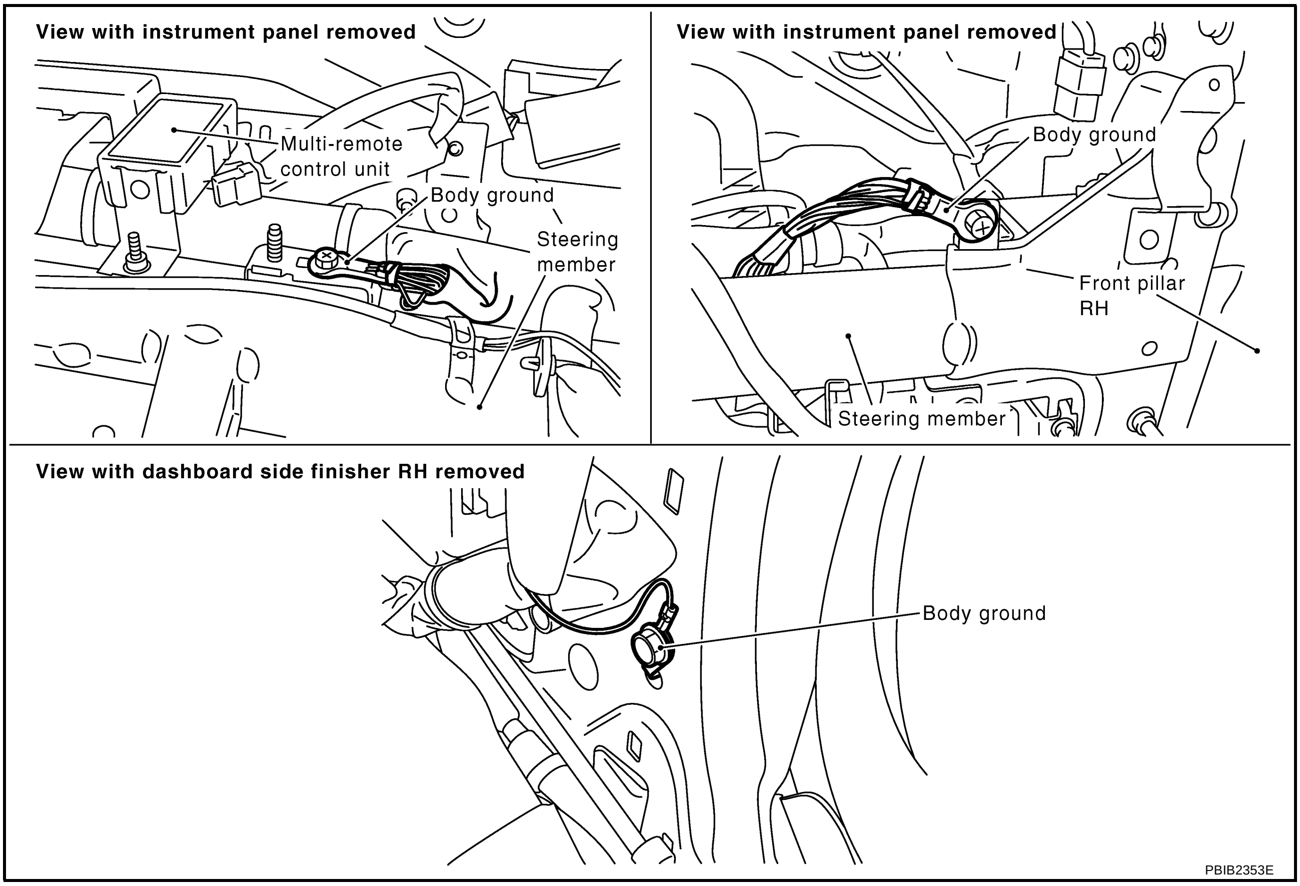

OK or NG

OK >> GO TO 2.
NG >> Repair or replace ground connections.

2. CHECK THROTTLE POSITION SENSOR 2 POWER SUPPLY CIRCUIT-I

1. Disconnect electric throttle control actuator harness connector.
2. Turn ignition switch ON.

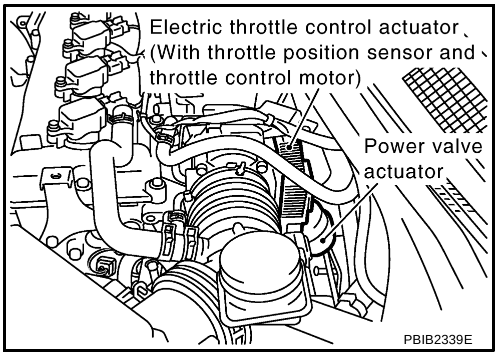

3. Check voltage between electric throttle control actuator terminal 1 and ground with CONSULT-II or tester.

Voltage: Approximately 5V

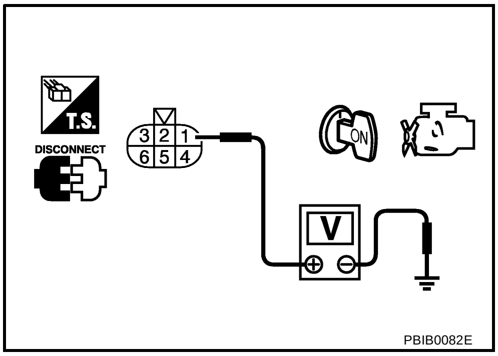

OK or NG

OK >> GO TO 7.
NG >> GO TO 3.

3. CHECK THROTTLE POSITION SENSOR 2 POWER SUPPLY CIRCUIT-II

1. Turn ignition switch OFF.
2. Disconnect ECM harness connector.
3. Check harness continuity between electric throttle control actuator terminal 1 and ECM terminal 47. Refer to Wiring Diagram.

Continuity should exist.

OK or NG

OK >> GO TO 4.
NG >> Repair or replace open circuit.

4. CHECK THROTTLE POSITION SENSOR 2 POWER SUPPLY CIRCUIT-III

Check harness for short to power and short to ground, between the following terminals.

ECM terminal	Sensor terminal	Reference Wiring Diagram
47	Electric throttle control actuator terminal 1	EC-212
91	APP sensor terminal 4	EC-564

OK or NG

OK >> GO TO 5.
NG >> Repair short to ground or short to power in harness or connectors.

5. CHECK APP SENSOR

Refer to EC-569, "Component Inspection" .

OK or NG

OK >> GO TO 11
NG >> GO TO 6.

6. REPLACE ACCELERATOR PEDAL ASSEMBLY

1. Replace accelerator pedal assembly.
2. Perform EC-88, "Accelerator Pedal Released Position Learning" .
3. Perform EC-88, "Throttle Valve Closed Position Learning" .
4. Perform EC-88, "Idle Air Volume Learning" .

>> **INSPECTION END**

7. CHECK THROTTLE POSITION SENSOR 2 GROUND CIRCUIT FOR OPEN AND SHORT

1. Turn ignition switch OFF.
2. Disconnect ECM harness connector.
3. Check harness continuity between electric throttle control actuator terminal 5 and ECM terminal 66.
   Refer to Wiring Diagram.

   Continuity should exist.

4. Also check harness for short to ground and short to power.

OK or NG

OK >> GO TO 8.
NG >> Repair open circuit or short to ground or short to power in harness or connectors.

8. CHECK THROTTLE POSITION SENSOR 2 INPUT SIGNAL CIRCUIT FOR OPEN AND SHORT

1. Check harness continuity between electric throttle control actuator terminal 2 and ECM terminal 69.
   Refer to Wiring Diagram.

   Continuity should exist.

2. Also check harness for short to ground and short to power.

OK or NG

OK >> GO TO 9.
NG >> Repair open circuit or short to ground or short to power in harness or connectors.

9. CHECK THROTTLE POSITION SENSOR

Refer to EC-217, "Component Inspection" .

OK or NG

OK >> GO TO 11.
NG >> GO TO 10.

10. REPLACE ELECTRIC THROTTLE CONTROL ACTUATOR

1. Replace the electric throttle control actuator.
2. Perform EC-88, "Throttle Valve Closed Position Learning" .
3. Perform EC-88, "Idle Air Volume Learning" .

>> **INSPECTION END**

11. CHECK INTERMITTENT INCIDENT

Refer to EC-153, "TROUBLE DIAGNOSIS FOR INTERMITTENT INCIDENT" .

>> **INSPECTION END**

Component Inspection

ABS00CNI

THROTTLE POSITION SENSOR

1. Reconnect all harness connectors disconnected.
2. Perform EC-88, "Throttle Valve Closed Position Learning" .
3. Turn ignition switch ON.
4. Set shift lever to D (A/T) or 1st (M/T) position.
5. Check voltage between ECM terminals 50 (TP sensor 1), 69 (TP sensor 2) and ground under the following conditions.

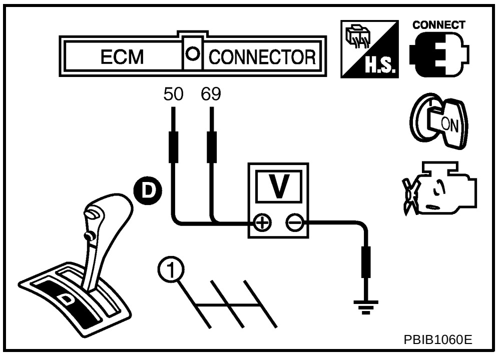

Terminal	Accelerator pedal	Voltage
50 (Throttle position sensor 1)	Fully released	More than 0.36V
	Fully depressed	Less than 4.75V
69 (Throttle position sensor 2)	Fully released	Less than 4.75V
	Fully depressed	More than 0.36V

6. If NG, replace electric throttle control actuator and go to the next step.
7. Perform EC-88, "Throttle Valve Closed Position Learning" .
8. Perform EC-88, "Idle Air Volume Learning" .

Remove and Installation

ABS00CNJ

ELECTRIC THROTTLE CONTROL ACTUATOR

Refer to EM-16, "INTAKE MANIFOLD" .

DTC P0125 ECT SENSOR

PFP:22630

Description

ABS00CNK

NOTE:

If DTC P0125 is displayed with P0117 or P0118, first perform the trouble diagnosis for DTC P0117 or P0118. Refer to **EC-204** **.**

COMPONENT DESCRIPTION

The engine coolant temperature sensor is used to detect the engine coolant temperature. The sensor modifies a voltage signal from the ECM. The modified signal returns to the ECM as the engine coolant temperature input. The sensor uses a thermistor which is sensitive to the change in temperature. The electrical resistance of the thermistor decreases as temperature increases.

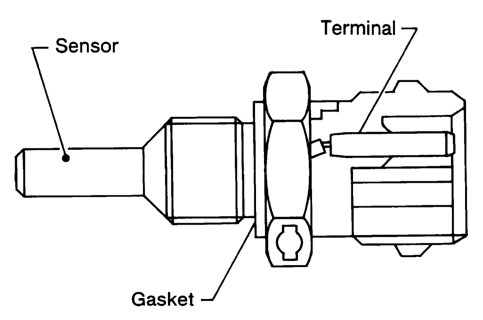

SEF594K

<Reference data>

Engine coolant temperature °C (°F)	Voltage* V	Resistance kΩ
–10 (14)	4.4	7.0 - 11.4
20 (68)	3.5	2.1 - 2.9
50 (122)	2.2	0.68 - 1.00
90 (194)	0.9	0.236 - 0.260

*: This data is reference value and is measured between ECM terminal 73 (Engine coolant temperature sensor) and ground.

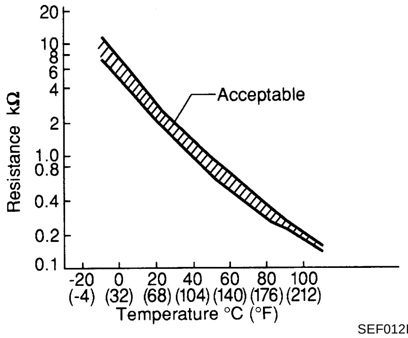

SEF012P

CAUTION:

Do not use ECM ground terminals when measuring input/output voltage. Doing so may result in damage to the ECM's transistor. Use a ground other than ECM terminals, such as the ground.

On Board Diagnosis Logic

ABS00CNL

This self-diagnosis has the one trip detection logic.

DTC No.	Trouble diagnosis name	DTC detecting condition	Possible cause
P0125 0125	Insufficient engine coolant temperature for closed loop fuel control	• Voltage sent to ECM from the sensor is not practical, even when some time has passed after starting the engine. • Engine coolant temperature is insufficient for closed loop fuel control.	• Harness or connectors (High resistance in the circuit) • Engine coolant temperature sensor • Thermostat

DTC Confirmation Procedure

ABS00CNM

CAUTION:

Be careful not to overheat engine.

NOTE:

If DTC Confirmation Procedure has been previously conducted, always turn ignition switch OFF and wait at least 10 seconds before conducting the next test.

WITH CONSULT-II

1. Turn ignition switch ON.

2. Select “DATA MONITOR” mode with CONSULT-II.
3. Check that “COOLAN TEMP/S” is above 10°C (50°F).
   If it is above 10°C (50°F), the test result will be OK.
   If it is below 10°C (50°F), go to following step.
4. Start engine and run it for 65 minutes at idle speed.
   If “COOLAN TEMP/S” increases to more than 10°C (50°F) within 65 minutes, stop engine because the test result will be OK.
5. If DTC is detected, go to EC-219, "Diagnostic Procedure" .

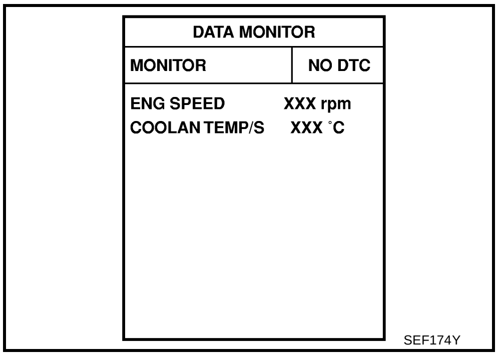

SEF174Y

WITH GST

Follow the procedure “WITH CONSULT-II” above.

Diagnostic Procedure

ABS00CNN

1. CHECK GROUND CONNECTIONS

1. Turn ignition switch OFF.
2. Loosen and retighten three ground screws on the body. Refer to EC-161, "Ground Inspection" .

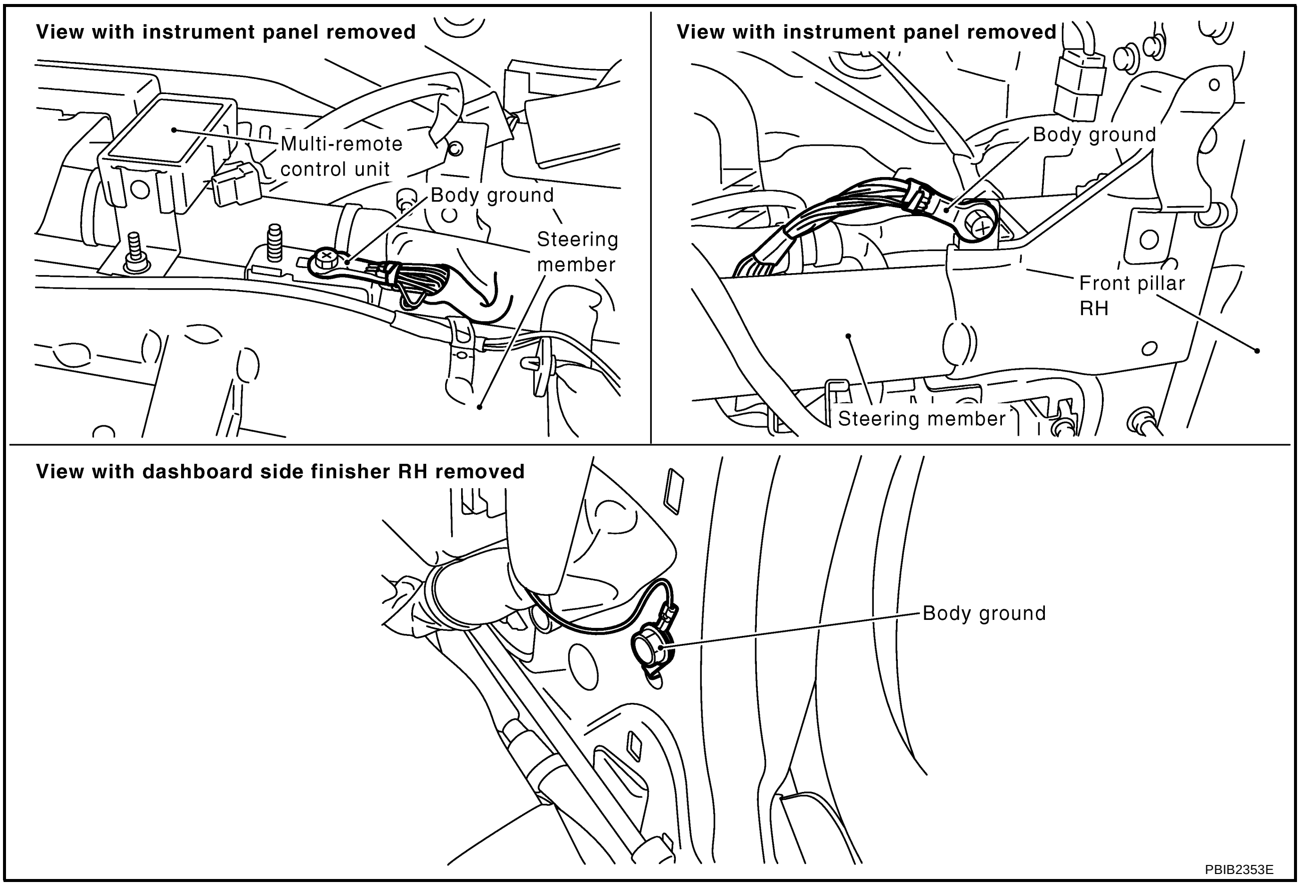

PBIB2353E

OK or NG

OK >> GO TO 2.
NG >> Repair or replace ground connections.

2. CHECK ENGINE COOLANT TEMPERATURE SENSOR

Refer to EC-220, "Component Inspection" .

OK or NG

OK >> GO TO 3.
NG >> Replace engine coolant temperature sensor.

3. CHECK THERMOSTAT OPERATION

When the engine is cold [lower than 70°C (158°F)] condition, grasp lower radiator hose and confirm the engine coolant does not flow.

OK or NG

OK >> GO TO 4.
NG >> Repair or replace thermostat. Refer to CO-22, "THERMOSTAT AND WATER CONTROL VALVE" .

4. CHECK INTERMITTENT INCIDENT

Refer to EC-153, "TROUBLE DIAGNOSIS FOR INTERMITTENT INCIDENT" .

>> **INSPECTION END**

Component Inspection

ABS00CNO

ENGINE COOLANT TEMPERATURE SENSOR

1. Check resistance between engine coolant temperature sensor terminals 1 and 2 as shown in the figure.

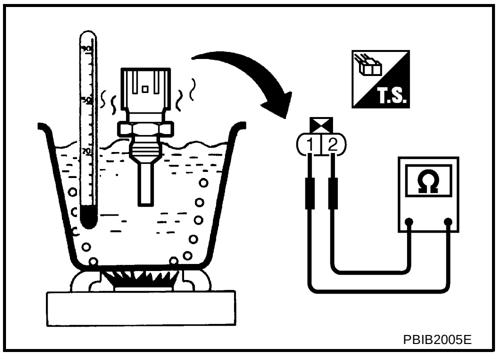

PBIB2005E

<Reference data>

Engine coolant temperature °C (°F)	Resistance kΩ
20 (68)	2.1 - 2.9
50 (122)	0.68 - 1.00
90 (194)	0.236 - 0.260

2. If NG, replace engine coolant temperature sensor.

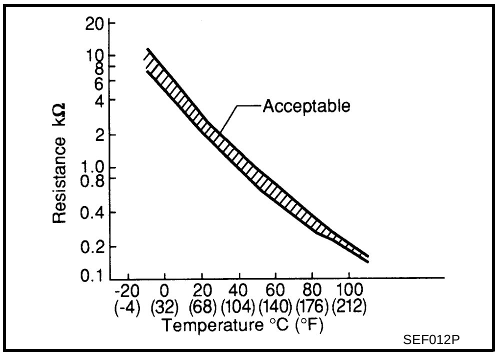

SEF012P

Removal and Installation

ABS00CNP

ENGINE COOLANT TEMPERATURE SENSOR

Refer to CO-22, "THERMOSTAT AND WATER CONTROL VALVE"

DTC P0127 IAT SENSOR

PFP:22630

Component Description

ABS00CNQ

The intake air temperature sensor is built into mass air flow sensor. The sensor detects intake air temperature and transmits a signal to the ECM.
The temperature sensing unit uses a thermistor which is sensitive to the change in temperature. Electrical resistance of the thermistor decreases in response to the temperature rise.

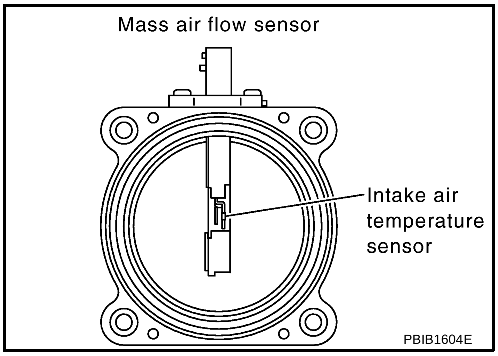

<Reference data>

Intake air temperature °C (°F)	Voltage* V	Resistance kΩ
25 (77)	3.32	1.94 - 2.06
80 (176)	1.23	0.295 - 0.349

*: This data is reference value and is measured between ECM terminal 34 (Intake air temperature sensor) and ground.

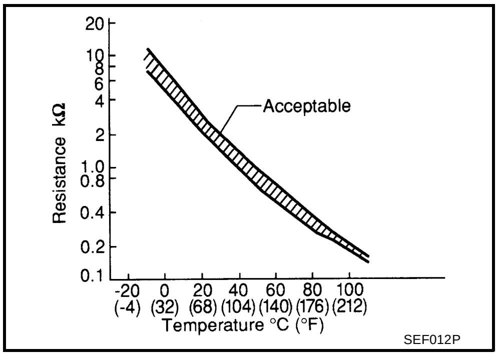

CAUTION:
Do not use ECM ground terminals when measuring input/output voltage. Doing so may result in damage to the ECM's transistor. Use a ground other than ECM terminals, such as the ground.

On Board Diagnosis Logic

ABS00CNR

DTC No.	Trouble diagnosis name	DTC detecting condition	Possible cause
P0127 0127	Intake air temperature too high	Rationally incorrect voltage from the sensor is sent to ECM, compared with the voltage signal from engine coolant sensor.	● Harness or connectors (The sensor circuit is open or shorted) ● Intake air temperature sensor

DTC Confirmation Procedure

ABS00CNS

CAUTION:
Always drive vehicle at a safe speed.

NOTE:
If DTC Confirmation Procedure has been previously conducted, always turn ignition switch OFF and wait at least 10 seconds before conducting the next test.
TESTING CONDITION:
This test may be conducted with the drive wheels lifted in the shop or by driving the vehicle. If a road test is expected to be easier, it is unnecessary to lift the vehicle.

WITH CONSULT-II

1. Wait until engine coolant temperature is less than 90°C (194°F)
a. Turn ignition switch ON.

b. Select “DATA MONITOR” mode with CONSULT-II.
c. Check the engine coolant temperature.
d. If the engine coolant temperature is not less than 90°C (194°F), turn ignition switch OFF and cool down engine.
   - Perform the following steps before engine coolant temperature is above 90°C (194°F).
2. Turn ignition switch ON.
3. Select “DATA MONITOR” mode with CONSULT-II.
4. Start engine.
5. Hold vehicle speed at more than 70 km/h (43 MPH) for 100 consecutive seconds.
6. If 1st trip DTC is detected, go to EC-222, "Diagnostic Procedure" .

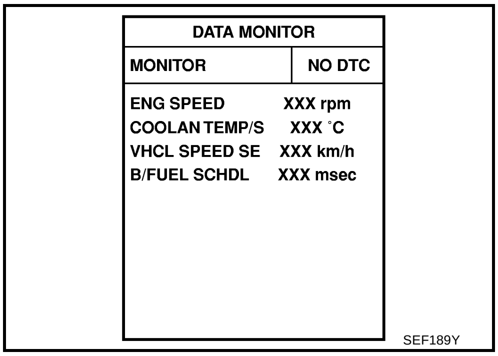

SEF189Y

WITH GST

Follow the procedure “WITH CONSULT-II” above.

Diagnostic Procedure

ABS00CNT

1. CHECK GROUND CONNECTIONS

1. Turn ignition switch OFF.
2. Loosen and retighten three ground screws on the body. Refer to EC-161, "Ground Inspection" .

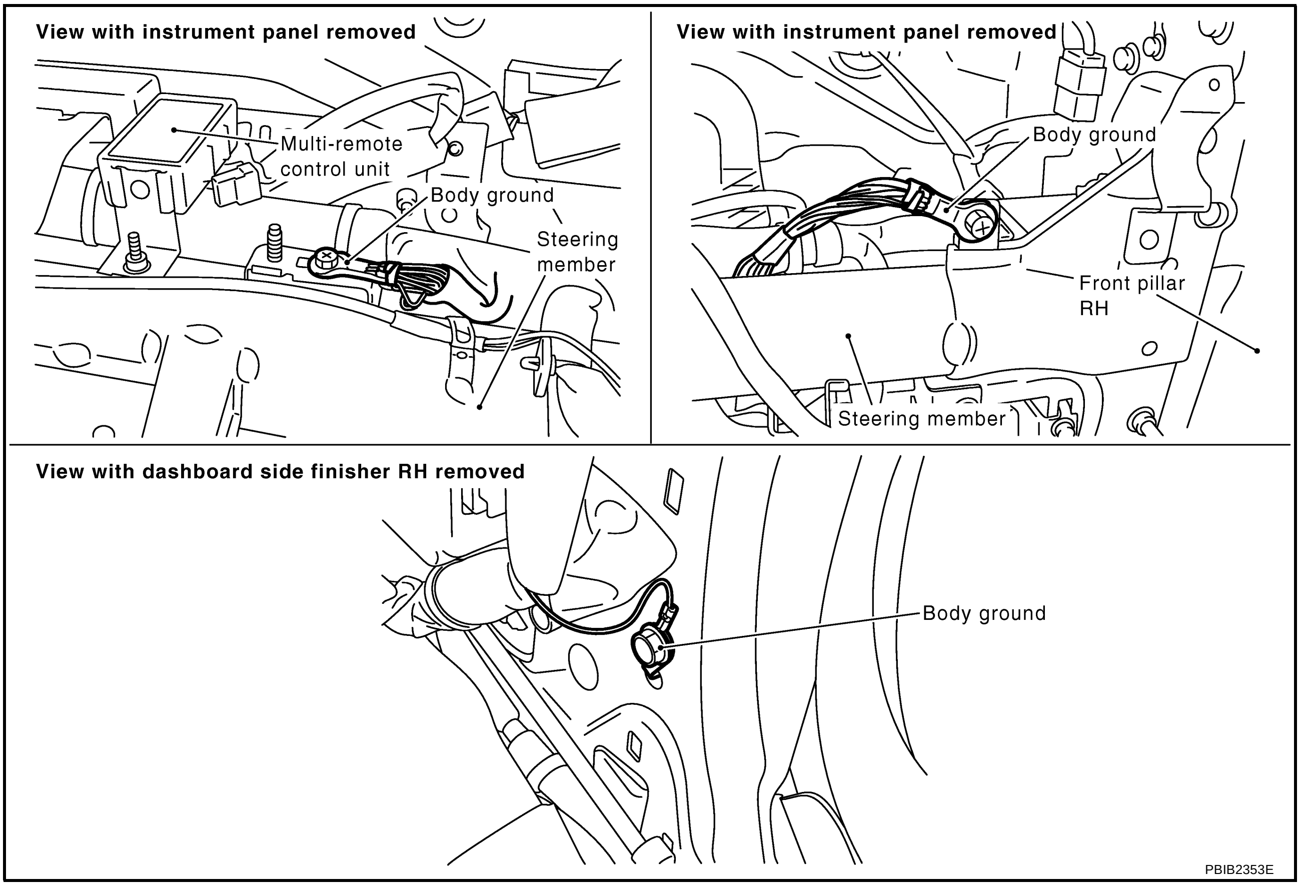

PBIB2353E

OK or NG

OK >> GO TO 2.
NG >> Repair or replace ground connections.

2. CHECK INTAKE AIR TEMPERATURE SENSOR

Refer to EC-223, "Component Inspection" .

OK or NG

OK >> GO TO 3.
NG >> Replace mass air flow sensor (with intake air temperature sensor).

3. CHECK INTERMITTENT INCIDENT

Refer to EC-153, "TROUBLE DIAGNOSIS FOR INTERMITTENT INCIDENT" .
Refer to EC-200, "Wiring Diagram" .

>> **INSPECTION END**

Component Inspection

ABS00CNU

INTAKE AIR TEMPERATURE SENSOR

1. Check resistance between intake air temperature sensor terminals 5 and 6 under the following conditions.

Intake air temperature °C (°F)	Resistance kΩ
25 (77)	1.94 - 2.06

2. If NG, replace mass air flow sensor (with intake air temperature sensor).

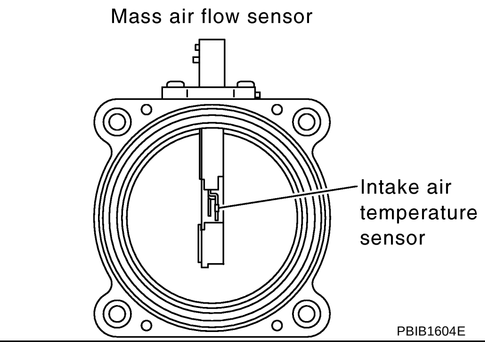

PBIB1604E

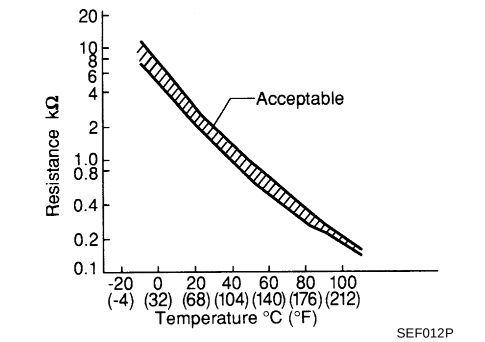

SEF012P

Removal and Installation

ABS00CNV

MASS AIR FLOW SENSOR

Refer to EM-14, "AIR CLEANER AND AIR DUCT" .

DTC P0128 THERMOSTAT FUNCTION

PFP:21200

On Board Diagnosis Logic

ABS00CNW

Engine coolant temperature has not risen enough to open the thermostat even though the engine has run long enough.
This is due to a leak in the seal or the thermostat stuck open.

DTC No.	Trouble diagnosis name	DTC detecting condition	Possible cause
P0128 0128	Thermostat function	The engine coolant temperature does not reach to specified temperature even though the engine has run long enough.	• Thermostat • Leakage from sealing portion of thermostat • Engine coolant temperature sensor

DTC Confirmation Procedure

ABS00CNX

NOTE:
If DTC Confirmation Procedure has been previously conducted, always turn ignition switch OFF and wait at least 10 seconds before conducting the next test.
TESTING CONDITION:

- **For best results, perform at ambient temperature of –10°C (14°F) or higher.**
- **For best results, perform at engine coolant temperature of –10°C (14°F) to 68°C (154°F).**

WITH CONSULT-II

1. Replace thermostat with new one. Refer to CO-22, "THERMOSTAT AND WATER CONTROL VALVE" . Use only a genuine NISSAN thermostat as a replacement. If an incorrect thermostat is used, the MIL may come on.
2. Turn ignition switch ON.
3. Select “COOLAN TEMP/S” in “DATA MONITOR” mode with CONSULT-II.
4. Check that the “COOLAN TEMP/S” is above 68°C (154°F).
   If it is below 68°C (154°F), go to following step.
   If it is above 68°C (154°F), cool down the engine to less than 68°C (154°F), then retry from step 1.
5. Drive vehicle for 10 consecutive minutes under the following conditions.

VHCL SPEED SE	80 - 120 km/h (50 - 75 MPH)

   If 1st trip DTC is detected, go to EC-224, "Diagnostic Procedure" .

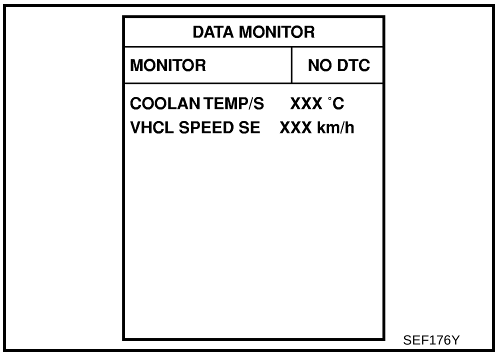

SEF176Y

WITH GST

Follow the procedure “WITH CONSULT-II” above.

Diagnostic Procedure

ABS00CNY

1. CHECK ENGINE COOLANT TEMPERATURE SENSOR

Refer to EC-225, "Component Inspection" .

OK or NG

OK >> **INSPECTION END**
NG >> Replace engine coolant temperature sensor.

Component Inspection

ABS00CNZ

ENGINE COOLANT TEMPERATURE SENSOR

1. Check resistance between engine coolant temperature sensor terminals 1 and 2 as shown in the figure.

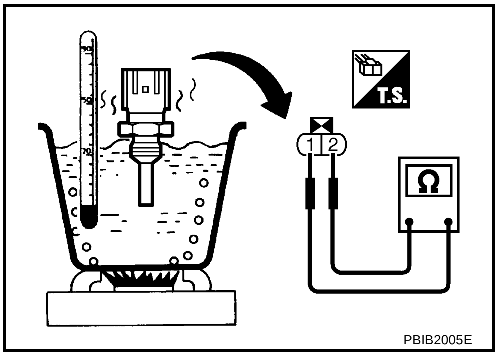

PBIB2005E

<Reference data>

Engine coolant temperature °C (°F)	Resistance kΩ
20 (68)	2.1 - 2.9
50 (122)	0.68 - 1.00
90 (194)	0.236 - 0.260

2. If NG, replace engine coolant temperature sensor.

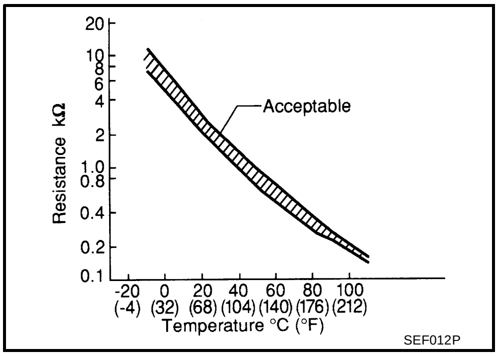

SEF012P

Removal and Installation

ABS00CO0

ENGINE COOLANT TEMPERATURE SENSOR

Refer to CO-22, "THERMOSTAT AND WATER CONTROL VALVE" .

DTC P0132 HO2S1

PFP:22690

Component Description

ABS00D6G

The heated oxygen sensor 1 is placed into the exhaust manifold. It detects the amount of oxygen in the exhaust gas compared to the outside air. The heated oxygen sensor 1 has a closed-end tube made of ceramic zirconia. The zirconia generates voltage from approximately 1V in richer conditions to 0V in leaner conditions. The heated oxygen sensor 1 signal is sent to the ECM. The ECM adjusts the injection pulse duration to achieve the ideal air-fuel ratio. The ideal air-fuel ratio occurs near the radical change from 1V to 0V.

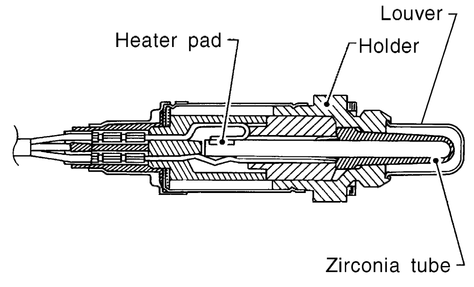

SEF463R

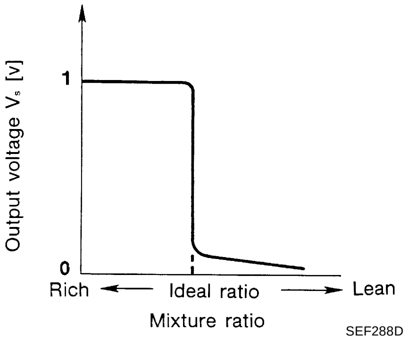

SEF288D

CONSULT-II Reference Value in Data Monitor Mode

ABS00D6H

Specification data are reference values.

MONITOR ITEM	CONDITION		SPECIFICATION
HO2S1 (B1)	● Engine: After warming up	Maintaining engine speed at 2,000 rpm	0 - 0.3V ←→ 0.6 - 1.0V
HO2S1 MNTR (B1)	● Engine: After warming up	Maintaining engine speed at 2,000 rpm	LEAN ←→ RICH Changes more than 5 times during 10 seconds.

On Board Diagnosis Logic

ABS00D6I

To judge the malfunction, the diagnosis checks that the heated oxygen sensor 1 output is not inordinately high.

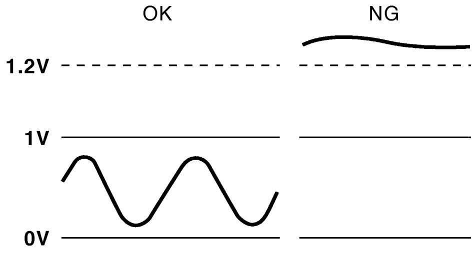

PBIB1848E

DTC No.	Trouble diagnosis name	DTC detecting condition	Possible cause
P0132 0132	Heated oxygen sensor 1 circuit high voltage	An excessively high voltage from the sensor is sent to ECM.	● Harness or connectors (The sensor circuit is open or shorted) ● Heated oxygen sensor 1

DTC Confirmation Procedure

ABS00D6J

NOTE:

If DTC Confirmation Procedure has been previously conducted, always turn ignition switch OFF and wait at least 10 seconds before conducting the next test.

WITH CONSULT-II

1. Start engine and warm it up to normal operating temperature.
2. Turn ignition switch OFF and wait at least 10 seconds.
3. Turn ignition switch ON.
4. Select “DATA MONITOR” mode with CONSULT-II.
5. Restart engine and let it idle for 2 minutes.
6. If 1st trip DTC is detected, go to EC-229, "Diagnostic Procedure" .

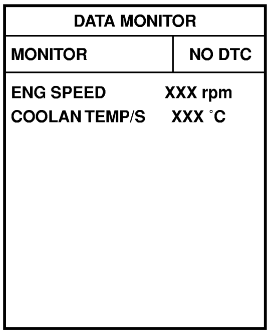

SEF174Y

WITH GST

Follow the procedure “WITH CONSULT-II” above.

A EC C D E F G H I J K L M

Wiring Diagram

ABS00D6K

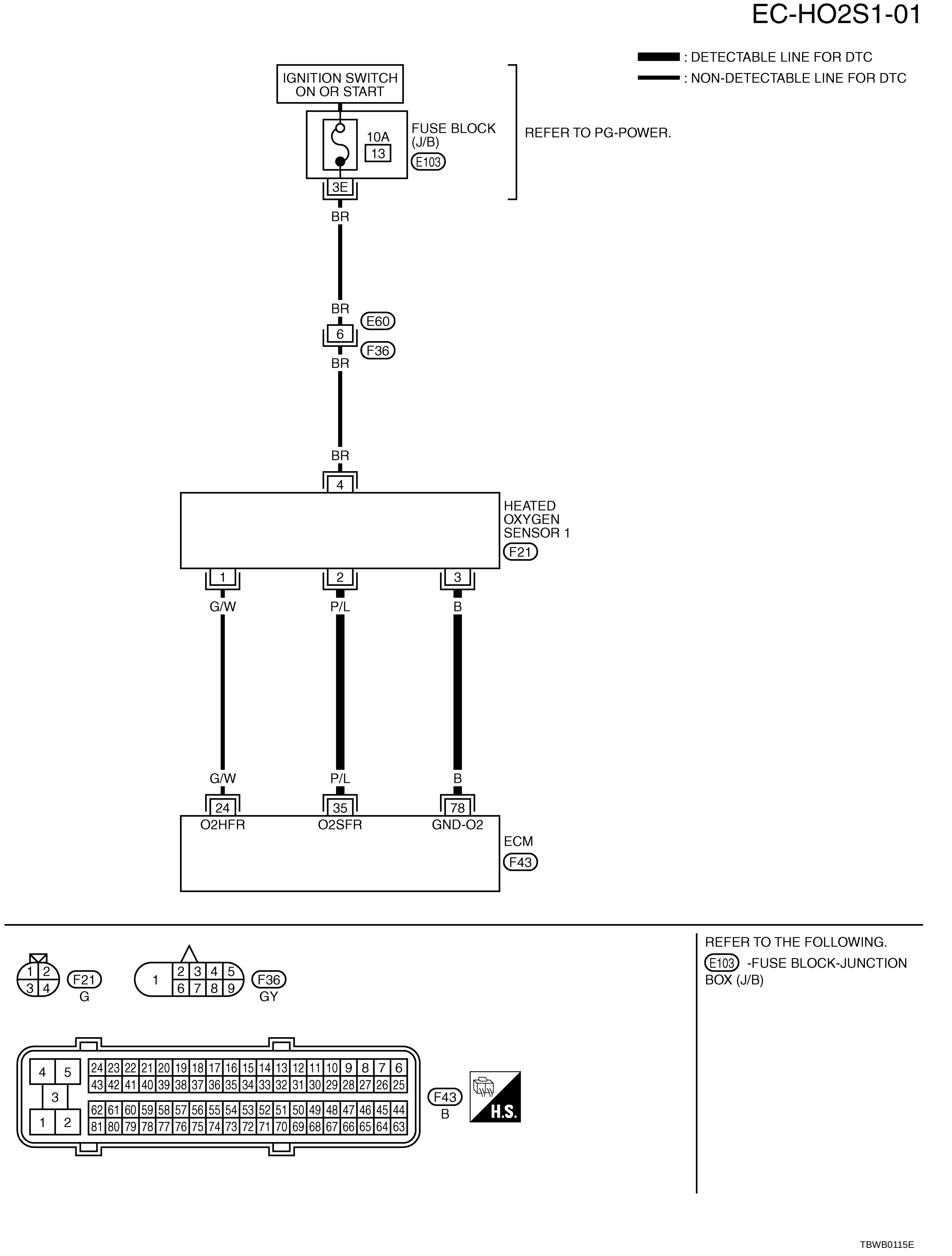

Specification data are reference values and are measured between each terminal and ground.

CAUTION:

Do not use ECM ground terminals when measuring input/output voltage. Doing so may result in damage to the ECM's transistor. Use a ground other than ECM terminals, such as the ground.

TERMINAL NO.	WIRE COLOR	ITEM	CONDITION	DATA (DC Voltage)
35	P/L	Heated oxygen sensor 1	**[Engine is running]** ● **Warm-up condition** ● Engine speed is 2,000 rpm	0 - Approximately 1.0V (Periodically change)
78	B	Sensor ground (Heated oxygen sensor)	**[Engine is running]** ● **Warm-up condition** ● Idle speed	Approximately 0V

Diagnostic Procedure

ABS00D88

1. CHECK GROUND CONNECTIONS

1. Turn ignition switch OFF.
2. Loosen and retighten ground three screws on the body.
   Refer to EC-161, "Ground Inspection" .

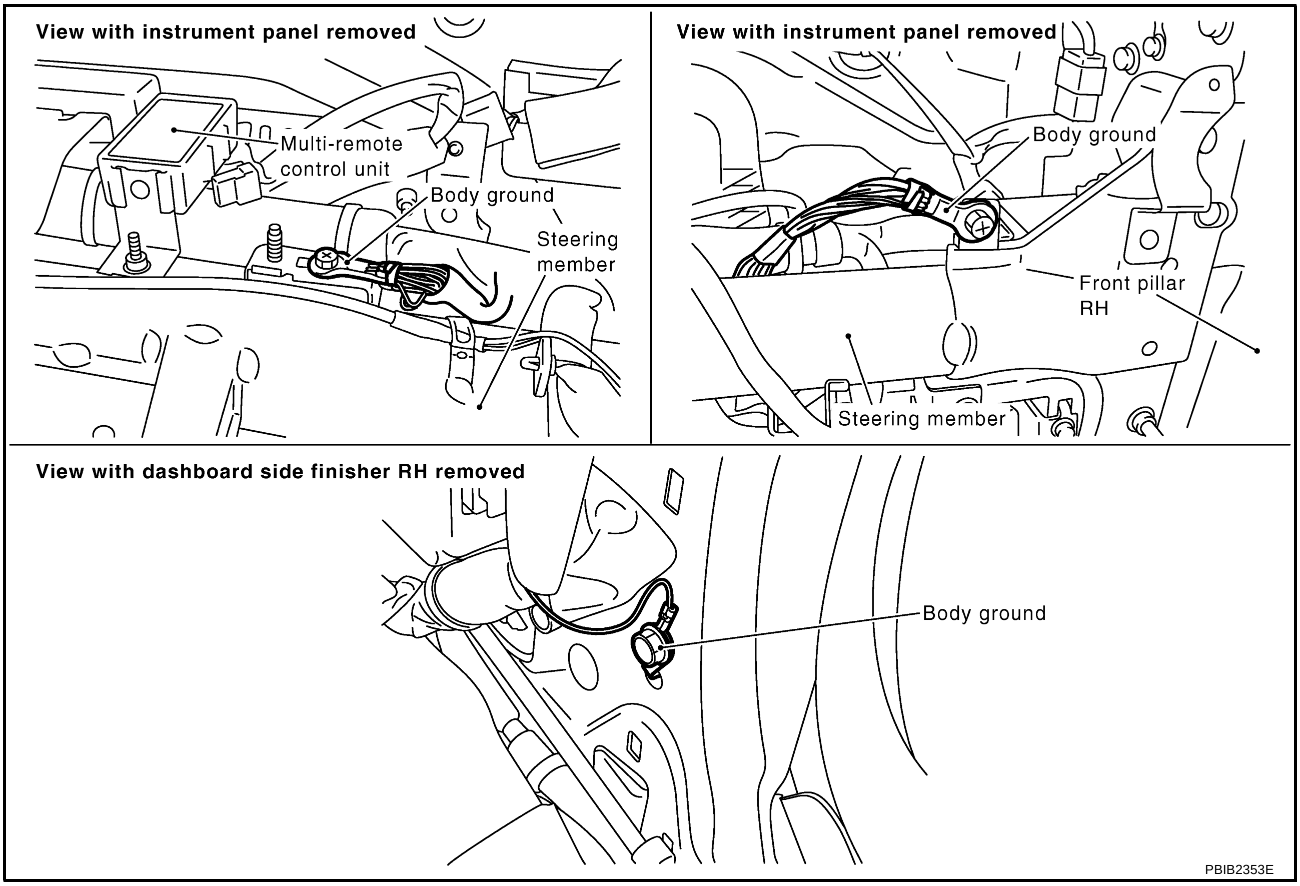

OK or NG

OK >> GO TO 2.

NG >> Repair or replace ground connections.

2. RETIGHTEN HEATED OXYGEN SENSOR 1

Loosen and retighten heated oxygen sensor 1.

Tightening torque: 50 N·m (5.1 kg-m, 37 ft-lb)

>> GO TO 3.

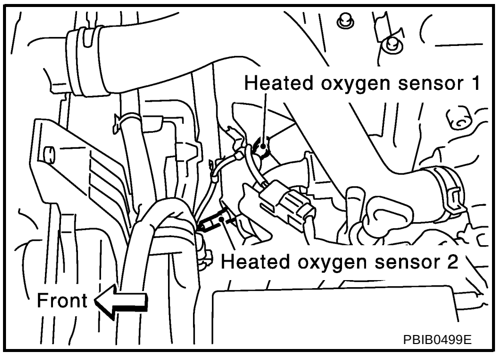

3. CHECK HO2S1 GROUND CIRCUIT FOR OPEN AND SHORT

1. Disconnect heated oxygen sensor 1 harness connector.
2. Disconnect ECM harness connector.
3. Check harness continuity between HO2S1 terminal 3 and ECM terminal 78.
   Refer to Wiring Diagram.

   Continuity should exist.

4. Also check harness for short to ground and short to power.

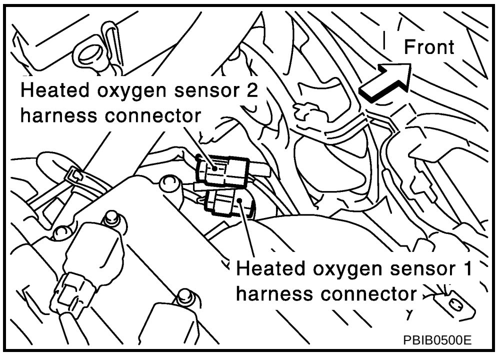

OK or NG

OK >> GO TO 4.
NG >> Repair open circuit or short to ground or short to power in harness or connectors.

4. CHECK HO2S1 INPUT SIGNAL CIRCUIT FOR OPEN AND SHORT

1. Check harness continuity between HO2S1 terminal 2 and ECM terminal 35.
   Refer to Wiring Diagram.

   Continuity should exist.

2. Check harness continuity between ECM terminal 35 or HO2S1 terminal 2 and ground.
   Refer to Wiring Diagram.

   Continuity should not exist.

3. Also check harness for short to power and short to ground.

OK or NG

OK >> GO TO 5.
NG >> Repair open circuit or short to ground or short to power in harness or connectors.

5. CHECK HO2S1 CONNECTOR FOR WATER

Check heated oxygen sensor 1 connectors for water.

Water should not exist.

OK or NG

OK >> GO TO 6.
NG >> Repair or replace harness or connectors.

6. CHECK HEATED OXYGEN SENSOR 1

Refer to EC-231, "Component Inspection" .

OK or NG

OK >> GO TO 7.
NG >> Replace heated oxygen sensor 1.

7. CHECK INTERMITTENT INCIDENT

Refer to EC-153, "TROUBLE DIAGNOSIS FOR INTERMITTENT INCIDENT" .

>> **INSPECTION END**

Component Inspection

ABS00D6M

HEATED OXYGEN SENSOR 1

With CONSULT-II

1. Start engine and warm it up to normal operating temperature.
2. Select “MANU TRIG” and adjust “TRIGGER POINT” to 100% in “DATA MONITOR” mode with CONSULT-II.
3. Select “HO2S1 (B1)” and “HO2S1 MNTR (B1)”.
4. Hold engine speed at 2,000 rpm under no load during the following steps.
5. Touch “RECORD” on CONSULT-II screen.

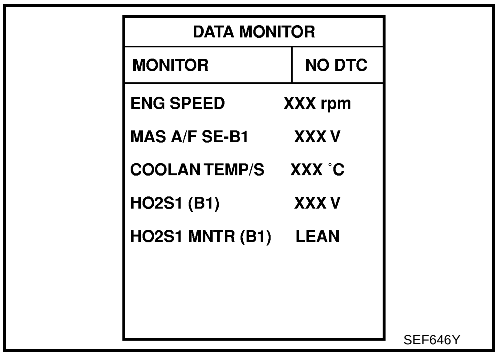

SEF646Y

6. Check the following.
   - “HO2S1 MNTR (B1)” in “DATA MONITOR” mode changes from “RICH” to “LEAN” to “RICH” more than 5 times in 10 seconds.
     5 times (cycles) are counted as shown at right.
   - “HO2S1 (B1)” voltage goes above 0.6V at least once.
   - “HO2S1 (B1)” voltage goes below 0.3V at least once.
   - “HO2S1 (B1)” voltage never exceeds 1.0V.

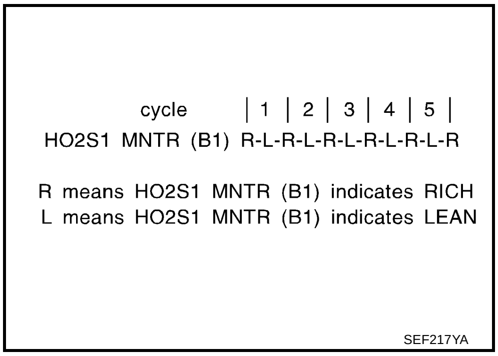

SEF217YA

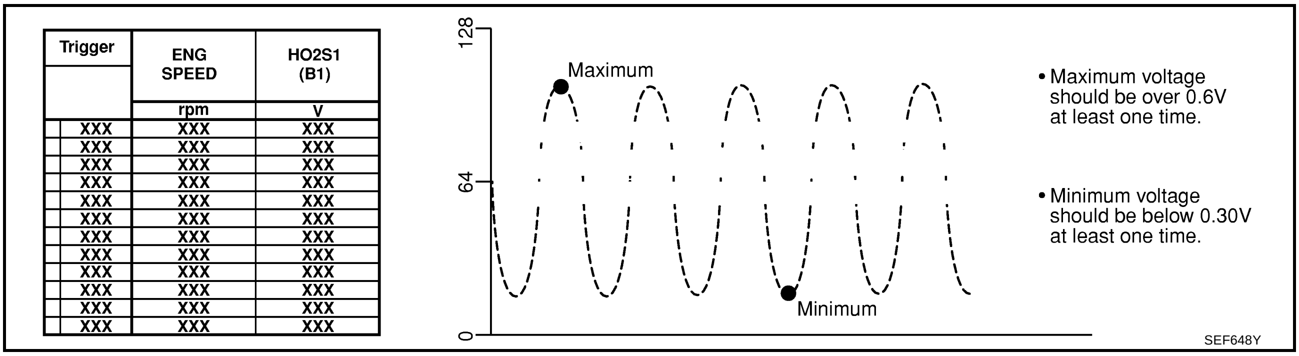

SEF648Y

CAUTION:

- **Discard any heated oxygen sensor which has been dropped from a height of more than 0.5 m (19.7 in) onto a hard surface such as a concrete floor; use a new one.**

- **Before installing new oxygen sensor, clean exhaust system threads using Oxygen Sensor Thread Cleaner tool J-43897-18 or J-43897-12 and approved anti-seize lubricant.**

Without CONSULT-II

1. Start engine and warm it up to normal operating temperature.
2. Set voltmeter probes between ECM terminal 35 [HO2S1 (B1) signal] and ground.
3. Check the following with engine speed held at 2,000 rpm constant under no load.
   - The voltage fluctuates between 0 to 0.3V and 0.6 to 1.0V more than 5 times within 10 seconds.
   - The maximum voltage is over 0.6V at least 1 time.
   - The minimum voltage is below 0.3V at least 1 time.
   - The voltage never exceeds 1.0V.

   1 time: 0 - 0.3V → 0.6 - 1.0V → 0 - 0.3V
   2 times: 0 - 0.3V → 0.6 - 1.0V → 0 - 0.3V → 0.6 - 1.0V → 0 - 0.3V

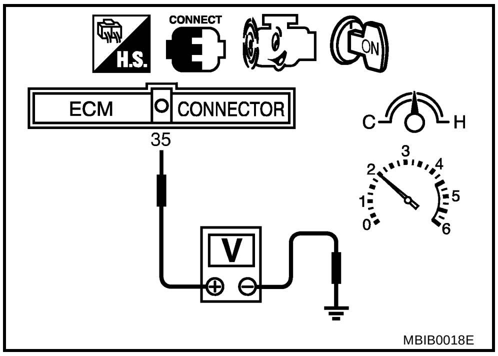

CAUTION:

- **Discard any heated oxygen sensor which has been dropped from a height of more than 0.5 m (19.7 in) onto a hard surface such as a concrete floor; use a new one.**
- **Before installing new oxygen sensor, clean exhaust system threads using Oxygen Sensor Thread Cleaner tool J-43897-18 or J-43897-12 and approved anti-seize lubricant.**

Removal and Installation

ABS00D6N

HEATED OXYGEN SENSOR 1

Refer to EM-20, "EXHAUST MANIFOLD AND THREE WAY CATALYST" .

DTC P0133 HO2S1

PFP:22690

Component Description

ABS00D6O

The heated oxygen sensor 1 is placed into the exhaust manifold. It detects the amount of oxygen in the exhaust gas compared to the outside air. The heated oxygen sensor 1 has a closed-end tube made of ceramic zirconia. The zirconia generates voltage from approximately 1V in richer conditions to 0V in leaner conditions. The heated oxygen sensor 1 signal is sent to the ECM. The ECM adjusts the injection pulse duration to achieve the ideal air-fuel ratio. The ideal air-fuel ratio occurs near the radical change from 1V to 0V.

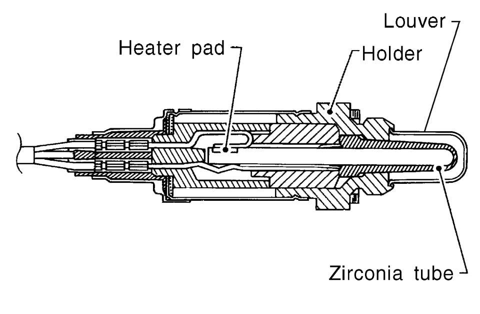

SEF463R

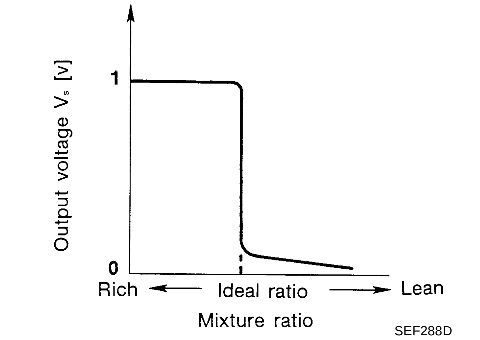

SEF288D

CONSULT-II Reference Value in Data Monitor Mode

ABS00D6P

Specification data are reference values.

MONITOR ITEM	CONDITION		SPECIFICATION
HO2S1 (B1)	● Engine: After warming up	Maintaining engine speed at 2,000 rpm	0 - 0.3V ←→ 0.6 - 1.0V
HO2S1 MNTR (B1)	● Engine: After warming up	Maintaining engine speed at 2,000 rpm	LEAN ←→ RICH Changes more than 5 times during 10 seconds.

On Board Diagnosis Logic

ABS00D6Q

To judge the malfunction of heated oxygen sensor 1, this diagnosis measures response time of heated oxygen sensor 1 signal. The time is compensated by engine operating (speed and load), fuel feedback control constant, and heated oxygen sensor 1 temperature index. Judgment is based on whether the compensated time (heated oxygen sensor 1 cycling time index) is inordinately long or not.

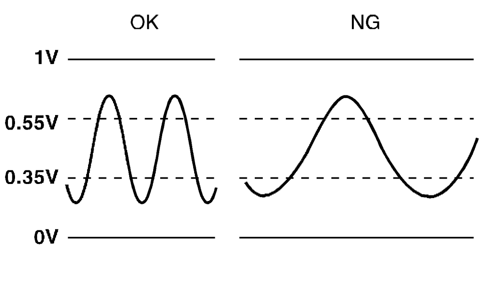

SEF010V

DTC No.	Trouble diagnosis name	DTC detecting condition	Possible cause
P0133 0133	Heated oxygen sensor 1 circuit slow response	The response of the voltage signal from the sensor takes more than the specified time.	● Harness or connectors (The sensor circuit is open or shorted) ● Heated oxygen sensor 1 ● Fuel pressure ● Fuel injector ● Intake air leaks ● Exhaust gas leaks ● PCV valve ● Mass air flow sensor

DTC Confirmation Procedure

ABS00D6R

CAUTION:

Always drive vehicle at a safe speed.

NOTE:

If DTC Confirmation Procedure has been previously conducted, always turn ignition switch OFF and wait at least 10 seconds before conducting the next test.

TESTING CONDITION:

- **Always perform at a temperature above –10°C (14°F).**
- **Before performing the following procedure, confirm that battery voltage is more than 11V at idle.**

WITH CONSULT-II

1. Start engine and warm it up to normal operating temperature.
2. Stop engine and wait at least 10 seconds.
3. Turn ignition switch ON and select “HO2S1 (B1) P0133” of “HO2S1” in “DTC WORK SUPPORT” mode with CONSULT-II.
4. Touch “START”.
5. Start engine and let it idle for at least 3 minutes.

   NOTE:

   Never raise engine speed above 3,600 rpm after this step. If the engine speed limit is exceeded, return to step 5.

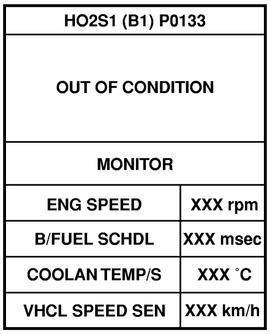

SEF338Z

6. When the following conditions are met, “TESTING” will be displayed on the CONSULT-II screen. Maintain the conditions continuously until “TESTING” changes to “COMPLETED”. (It will take approximately 40 to 50 seconds.)

ENG SPEED	1,600 - 3,300 rpm
VHCL SPEED SE	More than 80 km/h (50 MPH)
B/FUEL SCHDL	4.2 - 14.5 msec
Shift lever	Suitable position

   If “TESTING” is not displayed after 5 minutes, retry from step 2.

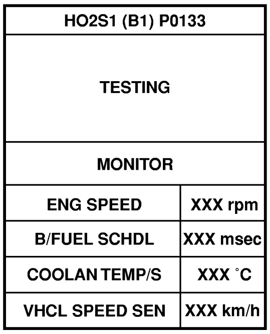

SEF339Z

7. Make sure that “OK” is displayed after touching “SELF-DIAG RESULTS”. If “NG” is displayed, refer to EC-237, "Diagnostic Procedure" .

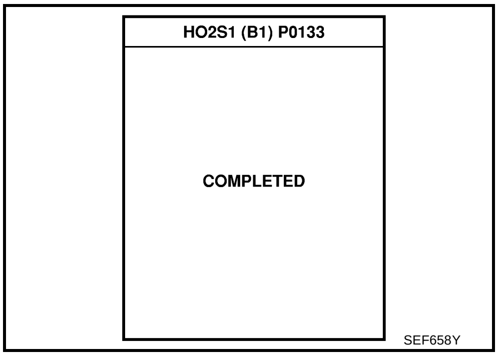

SEF658Y

Overall Function Check

ABS00D6S

Use this procedure to check the overall function of the heated oxygen sensor 1 circuit. During this check, a 1st trip DTC might not be confirmed.

WITH GST

1. Start engine and warm it up to normal operating temperature.
2. Set voltmeter probes between ECM terminal 35 [HO2S1(B1) signal] and ground.
3. Check the following with engine speed held at 2,000 rpm constant under no load.
   - The voltage fluctuates between 0 to 0.3V and 0.6 to 1.0V more than 5 times within 10 seconds.

1 time : 0 - 0.3V → 0.6 - 1.0V → 0 - 0.3V

2 times : 0 - 0.3V → 0.6 - 1.0V → 0 - 0.3V → 0.6 - 1.0V → 0 - 0.3V

4. If NG, go to EC-237, "Diagnostic Procedure" .

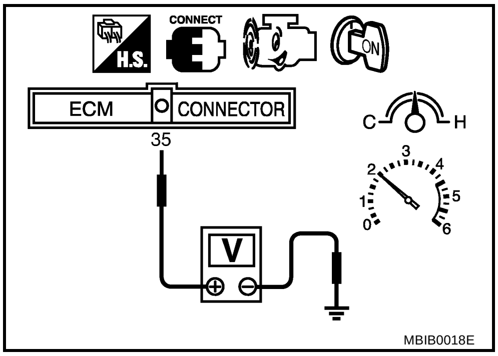

MBIB0018E

Wiring Diagram

ABS00D6T

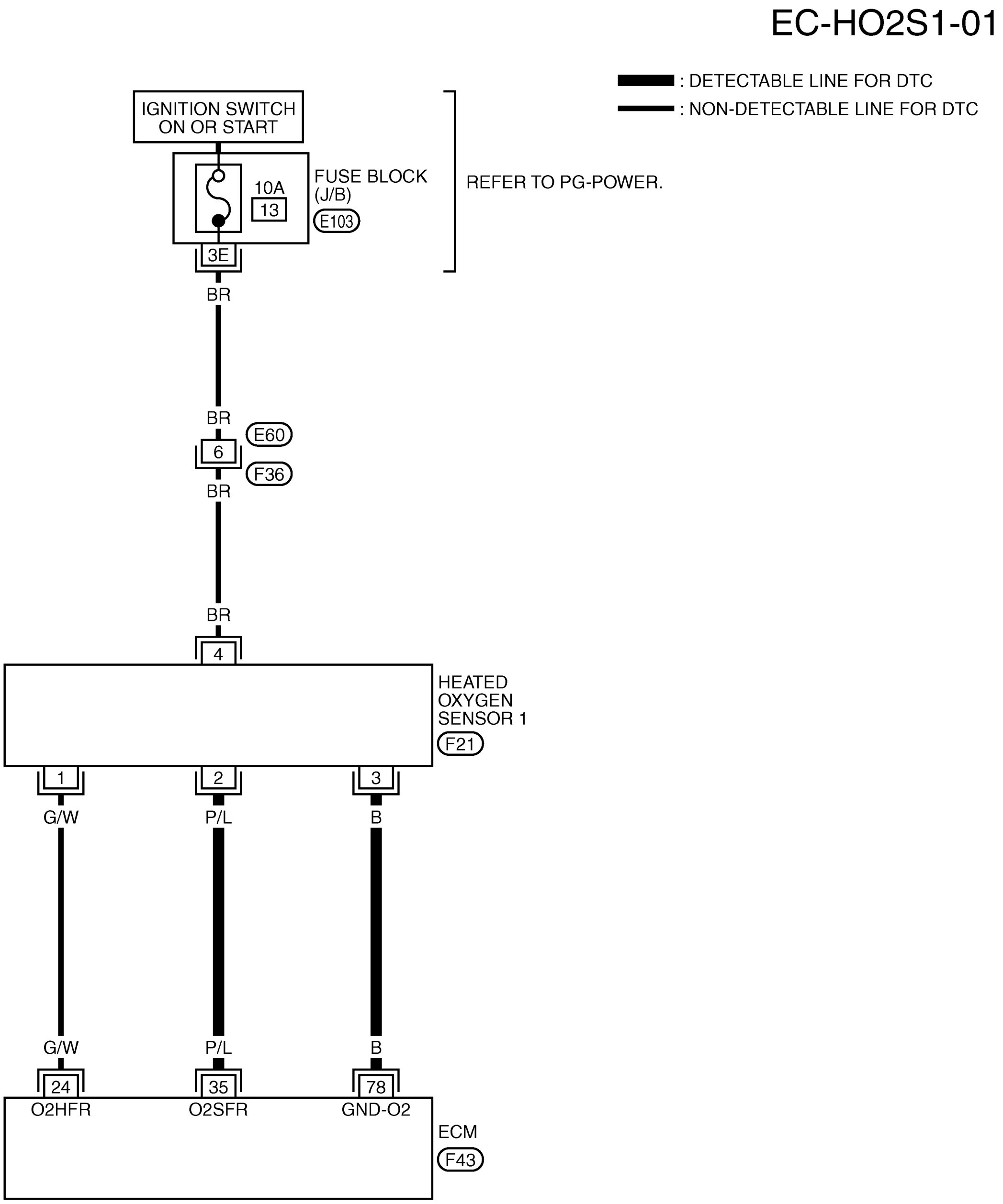

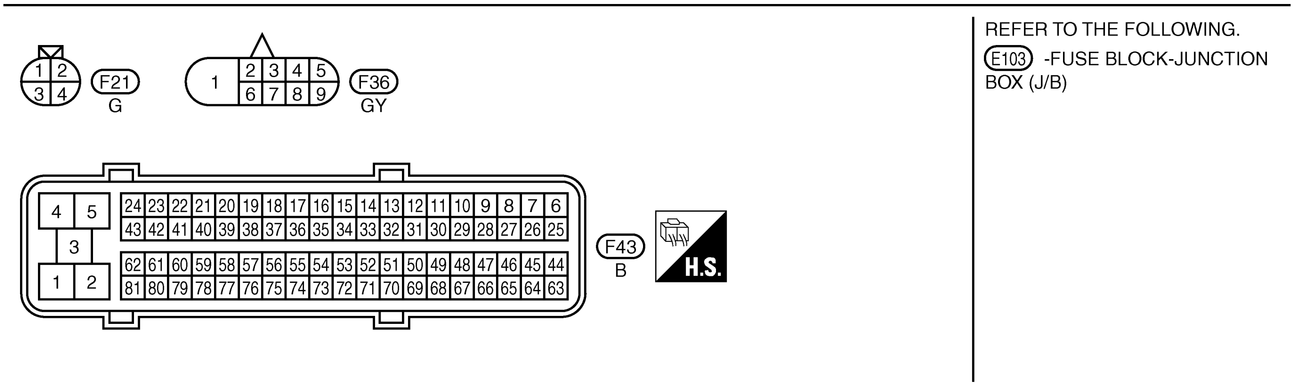

TBWB0115E

Specification data are reference values and are measured between each terminal and ground.

CAUTION:

Do not use ECM ground terminals when measuring input/output voltage. Doing so may result in damage to the ECM's transistor. Use a ground other than ECM terminals, such as the ground.

TERMINAL NO.	WIRE COLOR	ITEM	CONDITION	DATA (DC Voltage)
35	P/L	Heated oxygen sensor 1	**[Engine is running]** ● **Warm-up condition** ● Engine speed is 2,000 rpm	0 - Approximately 1.0V (Periodically change)
78	B	Sensor ground (Heated oxygen sensor)	**[Engine is running]** ● **Warm-up condition** ● Idle speed	Approximately 0V

Diagnostic Procedure

ABS00D89

1. CHECK GROUND CONNECTIONS

1. Turn ignition switch OFF.
2. Loosen and retighten ground three screws on the body.
   Refer to EC-161, "Ground Inspection" .

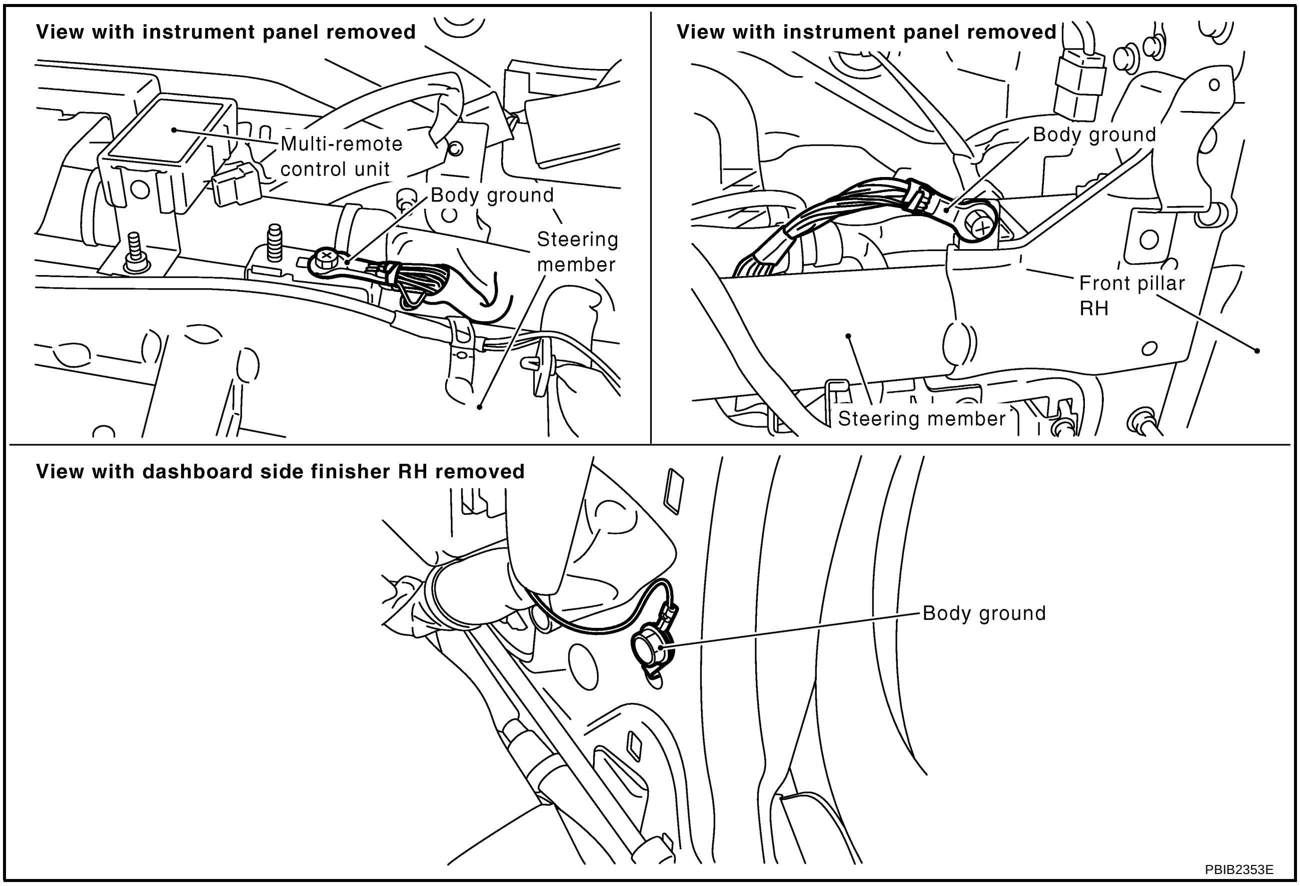

OK or NG

OK >> GO TO 2.

NG >> Repair or replace ground connections.

2. RETIGHTEN HEATED OXYGEN SENSOR 1

Loosen and retighten heated oxygen sensor 1.

Tightening torque: 50 N·m (5.1 kg-m, 37 ft-lb)

>> GO TO 3.

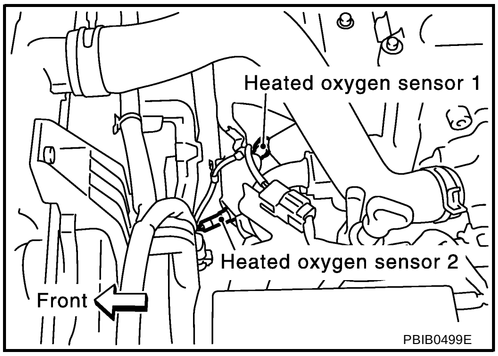

3. CHECK FOR EXHAUST GAS LEAK

1. Start engine and run it at idle.
2. Listen for an exhaust gas leak before three way catalyst (manifold).

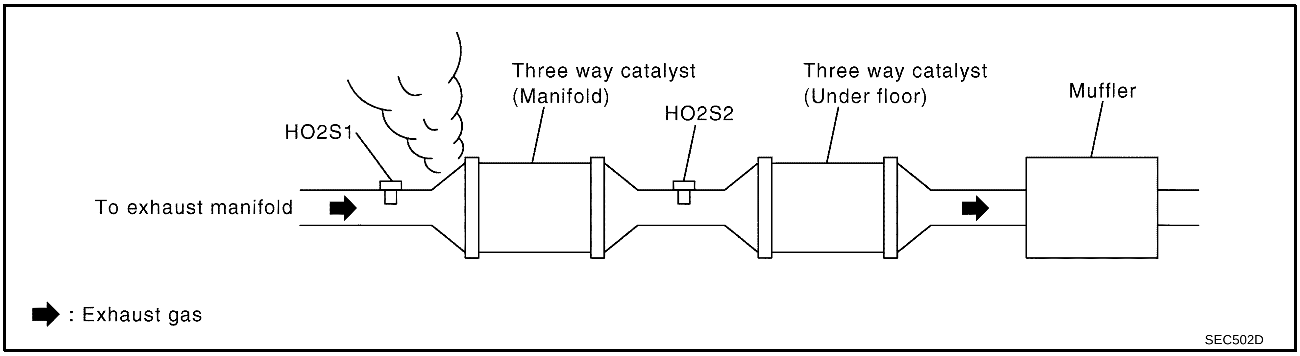

OK or NG

OK >> GO TO 4.
NG >> Repair or replace.

4. CHECK FOR INTAKE AIR LEAK

Listen for an intake air leak after the mass air flow sensor.

OK or NG

OK >> GO TO 5.
NG >> Repair or replace.

5. CLEAR THE SELF-LEARNING DATA

With CONSULT-II

1. Start engine and warm it up to normal operating temperature.
2. Select “SELF-LEARNING CONT” in “WORK SUPPORT” mode with CONSULT-II.
3. Clear the self-learning control coefficient by touching “CLEAR”.
4. Run engine for at least 10 minutes at idle speed.
   Is the 1st trip DTC P0171 or P0172 detected?
   Is it difficult to start engine?

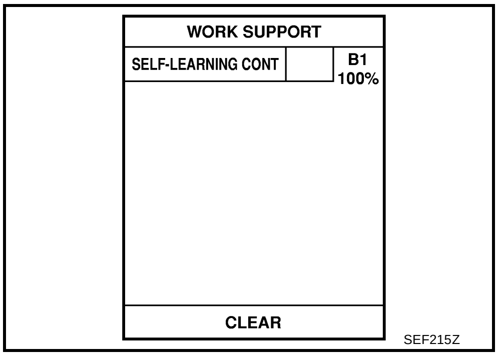

SEF215Z

Without CONSULT-II

1. Start engine and warm it up to normal operating temperature.
2. Turn ignition switch OFF.
3. Disconnect mass air flow sensor harness connector, and restart and run engine for at least 5 seconds at idle speed.
4. Stop engine and reconnect mass air flow sensor harness connector.
5. Make sure that DTC P0102 is displayed.
6. Erase the DTC memory. Refer to EC-59, "HOW TO ERASE EMISSION-RELATED DIAGNOSTIC INFORMATION" .
7. Make sure that DTC P0000 is displayed.
8. Run engine for at least 10 minutes at idle speed.
   Is the 1st trip DTC P0171 or P0172 detected?
   Is it difficult to start engine?

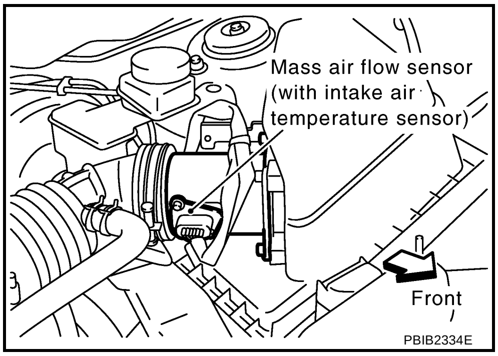

PBIB2334E

Yes or No

Yes >> Perform trouble diagnosis for DTC P0171 or DTC P0172 (Refer to EC-266 or EC-273).
No >> GO TO 6.

6. CHECK HO2S1 GROUND CIRCUIT FOR OPEN AND SHORT

1. Turn ignition switch OFF.
2. Disconnect heated oxygen sensor 1 harness connector.
3. Disconnect ECM harness connector.
4. Check harness continuity between HO2S1 terminal 3 and ECM terminal 78. Refer to Wiring Diagram.

   Continuity should exist.

5. Also check harness for short to ground and short to power.

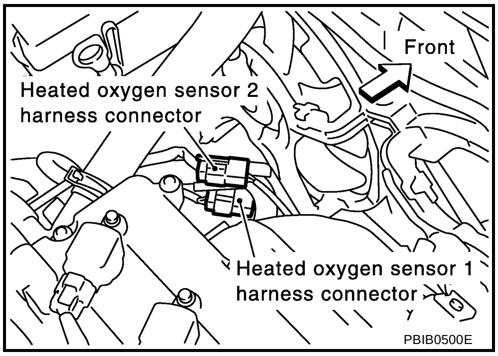

PBIB0500E

OK or NG

OK >> GO TO 7.
NG >> Repair open circuit or short to ground or short to power in harness or connectors.

7. CHECK HO2S1 INPUT SIGNAL CIRCUIT FOR OPEN AND SHORT

1. Check harness continuity between HO2S1 terminal 2 and ECM terminal 35.
   Refer to Wiring Diagram.

   Continuity should exist.

2. Check harness continuity between ECM terminal 35 or HO2S1 terminal 2 and ground.
   Refer to Wiring Diagram.

   Continuity should not exist.

3. Also check harness for short to power.

OK or NG

OK >> GO TO 8.
NG >> Repair open circuit or short to ground or short to power in harness or connectors.

8. CHECK MASS AIR FLOW SENSOR

Refer to EC-188, "Component Inspection" .

OK or NG

OK >> GO TO 9.
NG >> Replace mass air flow sensor.

9. CHECK PCV VALVE

Refer to EC-44, "Component Inspection" .

OK or NG

OK >> GO TO 10.
NG >> Replace PCV valve.

10. CHECK HEATED OXYGEN SENSOR 1

Refer to EC-240, "Component Inspection" .

OK or NG

OK >> GO TO 11.
NG >> Replace heated oxygen sensor 1.

11. CHECK INTERMITTENT INCIDENT

Refer to EC-153, "TROUBLE DIAGNOSIS FOR INTERMITTENT INCIDENT" .

>> **INSPECTION END**

Component Inspection

ABS00D6V

HEATED OXYGEN SENSOR 1

With CONSULT-II

1. Start engine and warm it up to normal operating temperature.
2. Select “MANU TRIG” and adjust “TRIGGER POINT” to 100% in “DATA MONITOR” mode with CONSULT-II.

3. Select “HO2S1 (B1)” and “HO2S1 MNTR (B1)”.
4. Hold engine speed at 2,000 rpm under no load during the following steps.
5. Touch “RECORD” on CONSULT-II screen.

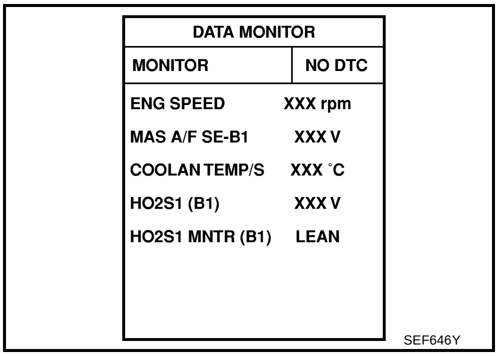

SEF646Y

6. Check the following.
   - “HO2S1 MNTR (B1)” in “DATA MONITOR” mode changes from “RICH” to “LEAN” to “RICH” more than 5 times in 10 seconds.
     5 times (cycles) are counted as shown at right.
   - “HO2S1 (B1)” voltage goes above 0.6V at least once.
   - “HO2S1 (B1)” voltage goes below 0.3V at least once.
   - “HO2S1 (B1)” voltage never exceeds 1.0V.

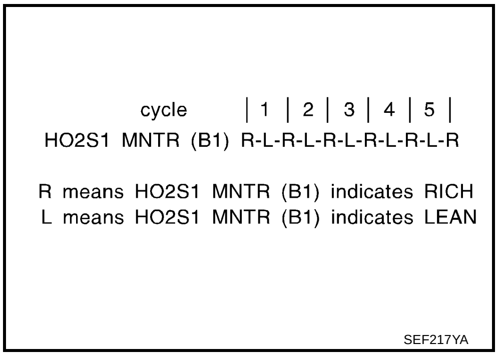

SEF217YA

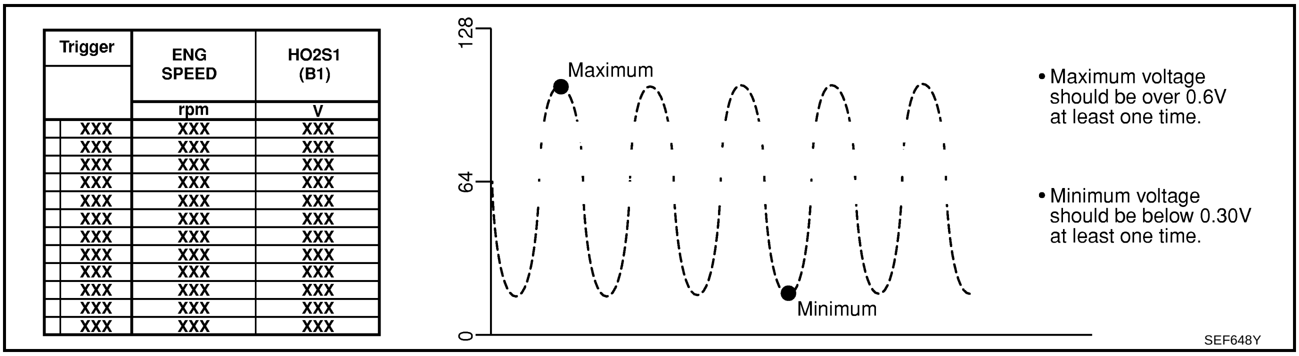

SEF648Y

CAUTION:
- **Discard any heated oxygen sensor which has been dropped from a height of more than 0.5 m (19.7 in) onto a hard surface such as a concrete floor; use a new one.**
- **Before installing new oxygen sensor, clean exhaust system threads using Oxygen Sensor Thread Cleaner tool J-43897-18 or J-43897-12 and approved anti-seize lubricant.**

Without CONSULT-II

1. Start engine and warm it up to normal operating temperature.
2. Set voltmeter probes between ECM terminal 35 [HO2S1 (B1) signal] and ground.
3. Check the following with engine speed held at 2,000 rpm constant under no load.
   - The voltage fluctuates between 0 to 0.3V and 0.6 to 1.0V more than 5 times within 10 seconds.
   - The maximum voltage is over 0.6V at least 1 time.
   - The minimum voltage is below 0.3V at least 1 time.
   - The voltage never exceeds 1.0V.

1 time : 0 - 0.3V → 0.6 - 1.0V → 0 - 0.3V

2 times : 0 - 0.3V → 0.6 - 1.0V → 0 - 0.3V →0.6 - 1.0V → 0 - 0.3V

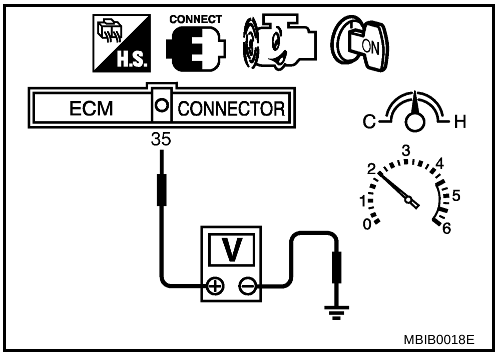

MBIB0018E

CAUTION:

- **Discard any heated oxygen sensor which has been dropped from a height of more than 0.5 m (19.7 in) onto a hard surface such as a concrete floor; use a new one.**
- **Before installing new oxygen sensor, clean exhaust system threads using Oxygen Sensor Thread Cleaner tool J-43897-18 or J-43897-12 and approved anti-seize lubricant.**

Removal and Installation

ABS00D6W

HEATED OXYGEN SENSOR 1

Refer to EM-20, "EXHAUST MANIFOLD AND THREE WAY CATALYST" .

DTC P0134 HO2S1

PFP:22690

Component Description

ABS00D6X

The heated oxygen sensor 1 is placed into the exhaust manifold. It detects the amount of oxygen in the exhaust gas compared to the outside air. The heated oxygen sensor 1 has a closed-end tube made of ceramic zirconia. The zirconia generates voltage from approximately 1V in richer conditions to 0V in leaner conditions. The heated oxygen sensor 1 signal is sent to the ECM. The ECM adjusts the injection pulse duration to achieve the ideal air-fuel ratio. The ideal air-fuel ratio occurs near the radical change from 1V to 0V.

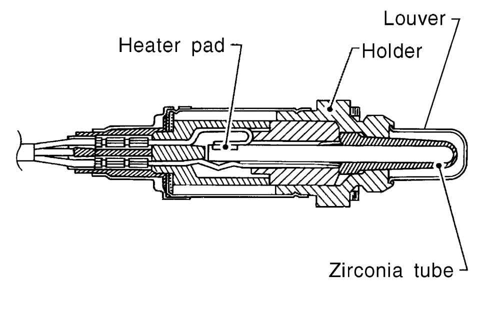

SEF463R

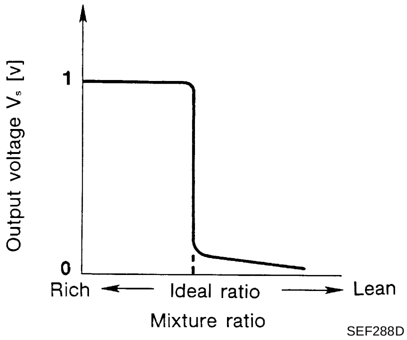

SEF288D

CONSULT-II Reference Value in Data Monitor Mode

ABS00D6Y

Specification data are reference values.

MONITOR ITEM	CONDITION		SPECIFICATION
HO2S1 (B1)	● Engine: After warming up	Maintaining engine speed at 2,000 rpm	0 - 0.3V ←→ 0.6 - 1.0V
HO2S1 MNTR (B1)	● Engine: After warming up	Maintaining engine speed at 2,000 rpm	LEAN ←→ RICH Changes more than 5 times during 10 seconds.

On Board Diagnosis Logic

ABS00D6Z

Under the condition in which the heated oxygen sensor 1 signal is not input, the ECM circuits will read a continuous approximately 0.3V. Therefore, for this diagnosis, the time that output voltage is within 200 to 400 mV range is monitored, and the diagnosis checks that this time is not inordinately long.

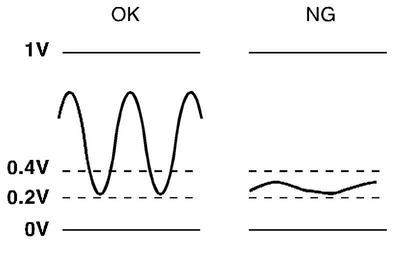

SEF237U

DTC No.	Trouble diagnosis name	DTC detecting condition	Possible cause
P0134 0134	Heated oxygen sensor 1 circuit no activity detected	The voltage from the sensor is constantly approx. 0.3V.	● Harness or connectors (The sensor circuit is open or shorted) ● Heated oxygen sensor 1

DTC Confirmation Procedure

ABS00D70

CAUTION:

Always drive vehicle at a safe speed.

NOTE:

If DTC Confirmation Procedure has been previously conducted, always turn ignition switch OFF and wait at least 10 seconds before conducting the next test.

TESTING CONDITION:

Before performing the following procedure, confirm that battery voltage is more than 11V at idle.

WITH CONSULT-II

1. Start engine and warm it up to normal operating temperature.
2. Select “HO2S1 (B1) P0134” of “HO2S1” in “DTC WORK SUPPORT” mode with CONSULT-II.
3. Touch “START”.
4. Let it idle for at least 3 minutes.

   NOTE:

   Never raise engine speed above 3,600 rpm after this step. If the engine speed limit is exceeded, return to step 4.

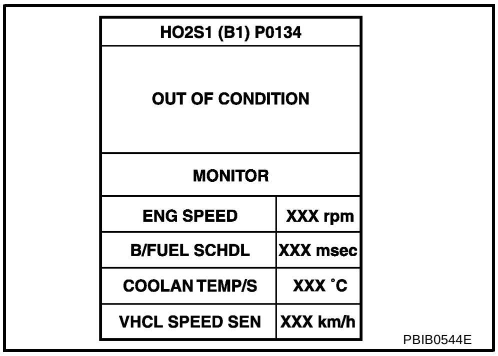

PBIB0544E

5. When the following conditions are met, “TESTING” will be displayed on the CONSULT-II screen. Maintain the conditions continuously until “TESTING” changes to “COMPLETED”. (It will take approximately 10 to 60 seconds.)

ENG SPEED	1,500 - 3,300 rpm
VHCL SPEED SE	More than 64 km/h (40 MPH)
B/FUEL SCHDL	1.8 - 14.5 msec
Shift lever	Suitable position

   If “TESTING” is not displayed after 5 minutes, retry from step 2.

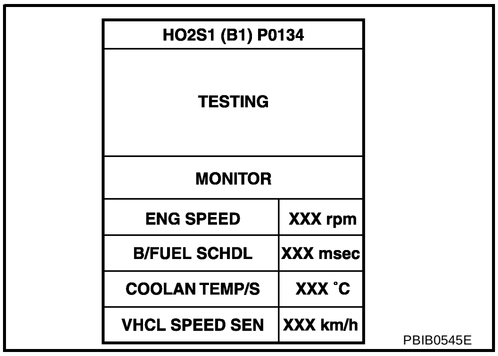

PBIB0545E

6. Make sure that “OK” is displayed after touching “SELF-DIAG RESULTS”. If “NG” is displayed, refer to EC-247, "Diagnostic Procedure" .

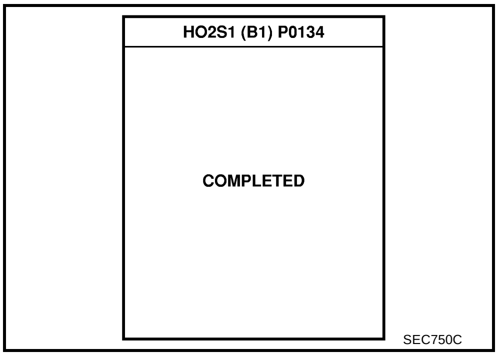

SEC750C

Overall Function Check

ABS00D71

Use this procedure to check the overall function of the heated oxygen sensor 1 circuit. During this check, a 1st trip DTC might not be confirmed.

WITH GST

1. Start engine and warm it up to normal operating temperature.
2. Set voltmeter probes between ECM terminal 35 [HO2S1 (B1) signal] and ground.
3. Check the following with engine speed held at 2,000 rpm constant under no load.
   - The voltage does not remain in the range of 0.2 to 0.4V.
4.

   If NG, go to EC-247, "Diagnostic Procedure" .

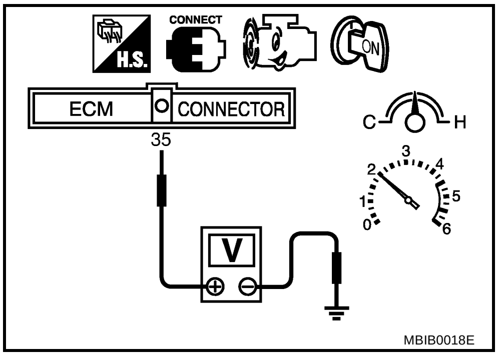

A
EC
C
D
E
F
G
H
I
J
K
L
M

Wiring Diagram

ABS00D72

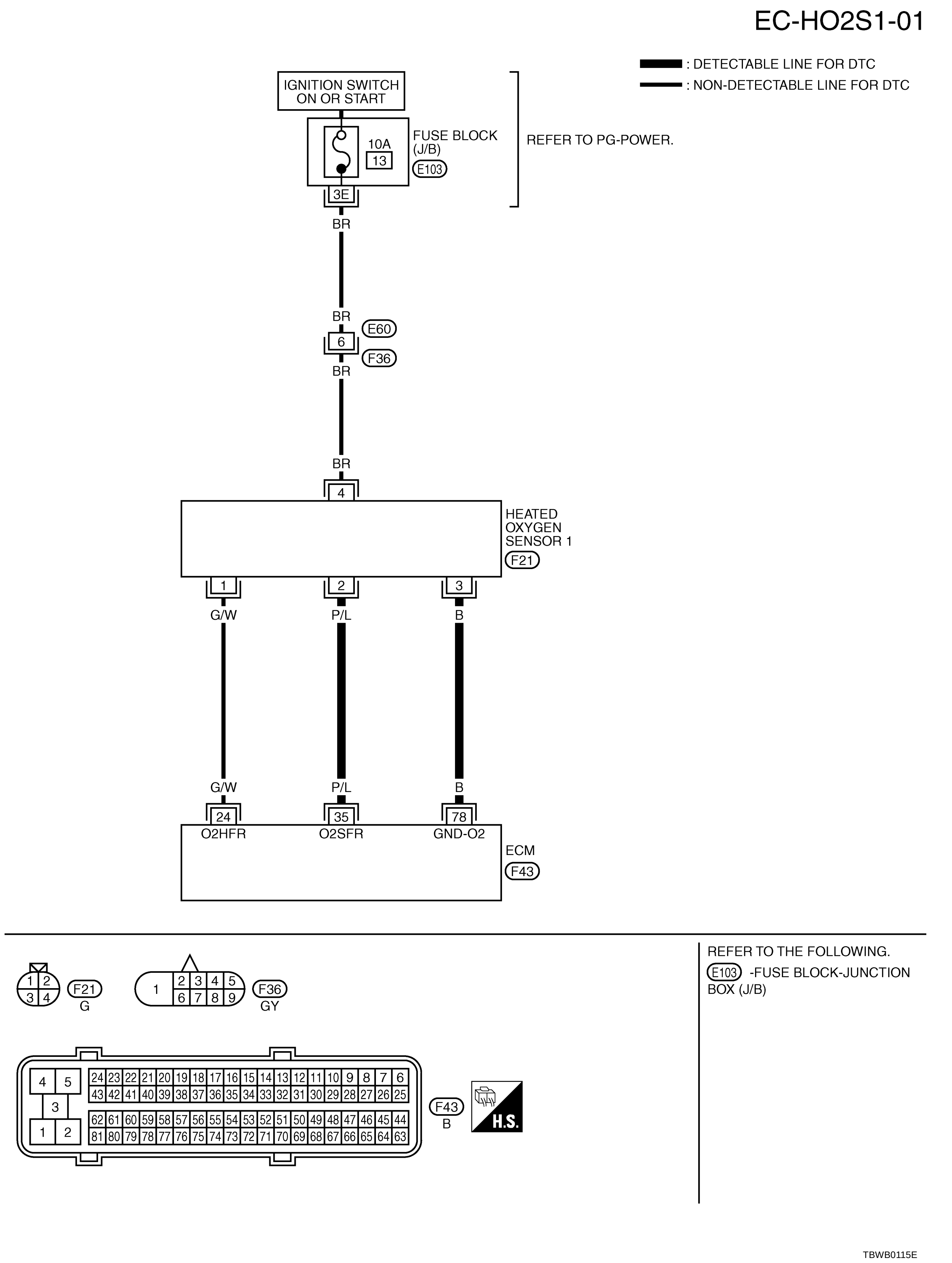

Specification data are reference values and are measured between each terminal and ground.

CAUTION:

Do not use ECM ground terminals when measuring input/output voltage. Doing so may result in damage to the ECM's transistor. Use a ground other than ECM terminals, such as the ground.

TERMINAL NO.	WIRE COLOR	ITEM	CONDITION	DATA (DC Voltage)
35	P/L	Heated oxygen sensor 1	**[Engine is running]** ● **Warm-up condition** ● Engine speed is 2,000 rpm	0 - Approximately 1.0V (Periodically change)
78	B	Sensor ground (Heated oxygen sensor)	**[Engine is running]** ● **Warm-up condition** ● Idle speed	Approximately 0V

Diagnostic Procedure

ABS00D8A

1. CHECK GROUND CONNECTIONS

1. Turn ignition switch OFF.
2. Loosen and retighten ground three screws on the body.
   Refer to EC-161, "Ground Inspection" .

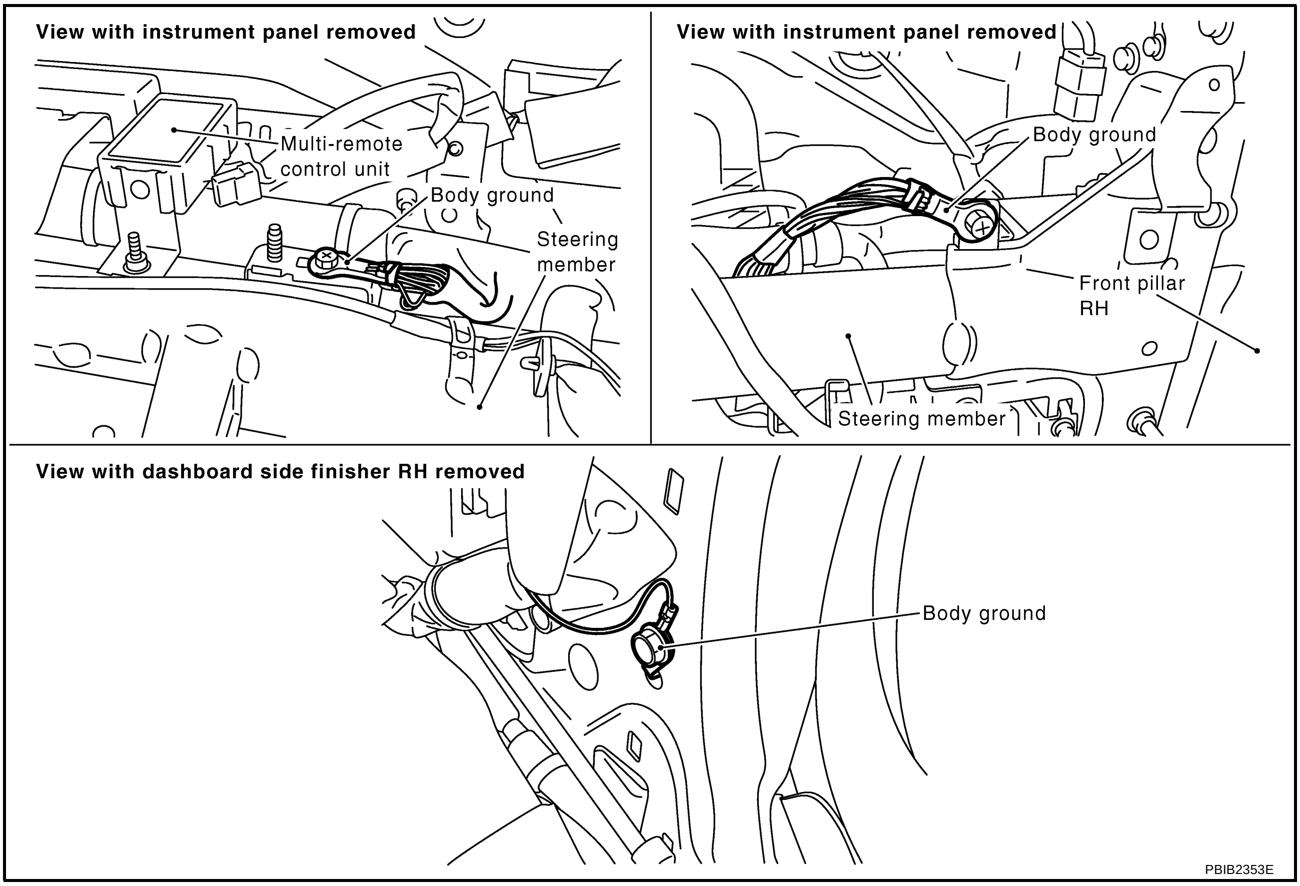

OK or NG

OK >> GO TO 2.

NG >> Repair or replace ground connections.

2. CHECK HO2S1 GROUND CIRCUIT FOR OPEN AND SHORT

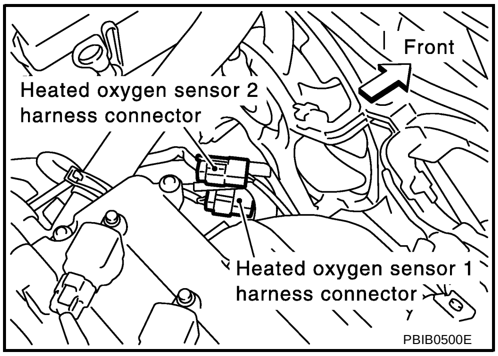

1. Disconnect heated oxygen sensor 1 harness connector.
2. Disconnect ECM harness connector.
3. Check harness continuity between HO2S1 terminal 3 and ECM terminal 78. Refer to Wiring Diagram.

   Continuity should exist.

4. Also check harness for short to ground and short to power.

OK or NG

OK >> GO TO 3.
NG >> Repair open circuit or short to ground or short to power in harness or connectors.

3. CHECK HO2S1 INPUT SIGNAL CIRCUIT FOR OPEN AND SHORT

1. Check harness continuity between HO2S1 terminal 2 and ECM terminal 35. Refer to Wiring Diagram.

   Continuity should exist.

2. Check harness continuity between ECM terminal 35 or HO2S1 terminal 2 and ground. Refer to Wiring Diagram.

   Continuity should not exist.

3. Also check harness for short to power and short to ground.

OK or NG

OK >> GO TO 4.
NG >> Repair open circuit or short to ground or short to power in harness or connectors.

4. CHECK HEATED OXYGEN SENSOR 1

Refer to EC-248, "Component Inspection" .

OK or NG

OK >> GO TO 5.
NG >> Replace heated oxygen sensor 1.

5. CHECK INTERMITTENT INCIDENT

Refer to EC-153, "TROUBLE DIAGNOSIS FOR INTERMITTENT INCIDENT" .

>> **INSPECTION END**

Component Inspection

ABS00D74

HEATED OXYGEN SENSOR 1

With CONSULT-II

1. Start engine and warm it up to normal operating temperature.
2. Select “MANU TRIG” and adjust “TRIGGER POINT” to 100% in “DATA MONITOR” mode with CONSULT-II.

3. Select “HO2S1 (B1)” and “HO2S1 MNTR (B1)”.
4. Hold engine speed at 2,000 rpm under no load during the following steps.
5. Touch “RECORD” on CONSULT-II screen.

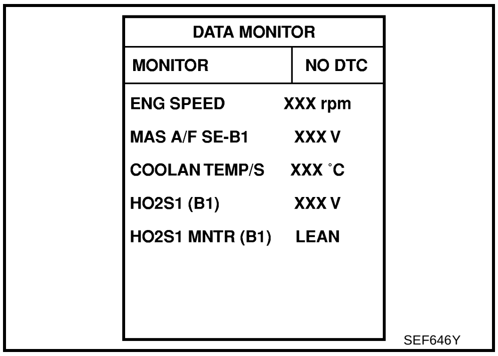

SEF646Y

6. Check the following.
   - “HO2S1 MNTR (B1)” in “DATA MONITOR” mode changes from “RICH” to “LEAN” to “RICH” more than 5 times in 10 seconds.
     5 times (cycles) are counted as shown at right.
   - “HO2S1 (B1)” voltage goes above 0.6V at least once.
   - “HO2S1 (B1)” voltage goes below 0.3V at least once.
   - “HO2S1 (B1)” voltage never exceeds 1.0V.

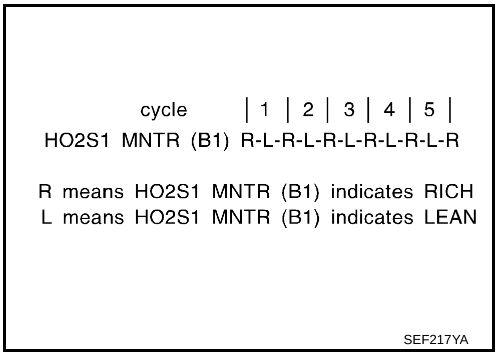

SEF217YA

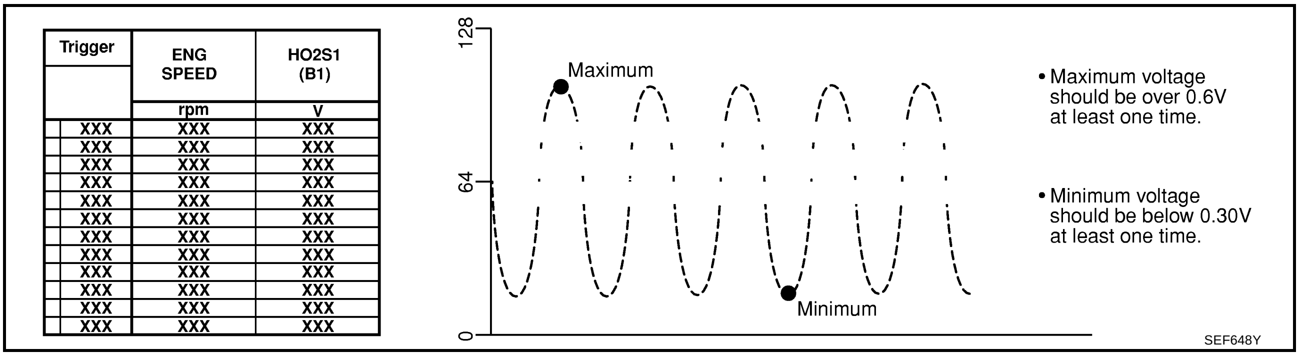

SEF648Y

CAUTION:
- **Discard any heated oxygen sensor which has been dropped from a height of more than 0.5 m (19.7 in) onto a hard surface such as a concrete floor; use a new one.**
- **Before installing new oxygen sensor, clean exhaust system threads using Oxygen Sensor Thread Cleaner tool J-43897-18 or J-43897-12 and approved anti-seize lubricant.**

Without CONSULT-II

1. Start engine and warm it up to normal operating temperature.
2. Set voltmeter probes between ECM terminal 35 [HO2S1 (B1) signal] and ground.
3. Check the following with engine speed held at 2,000 rpm constant under no load.
   - The voltage fluctuates between 0 to 0.3V and 0.6 to 1.0V more than 5 times within 10 seconds.
   - The maximum voltage is over 0.6V at least 1 time.
   - The minimum voltage is below 0.3V at least 1 time.
   - The voltage never exceeds 1.0V.

   1 time: 0 - 0.3V → 0.6 - 1.0V → 0 - 0.3V
   2 times: 0 - 0.3V → 0.6 - 1.0V → 0 - 0.3V → 0.6 - 1.0V → 0 - 0.3V

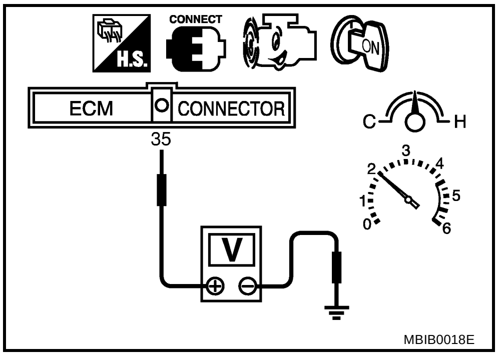

MBIB0018E

CAUTION:
- **Discard any heated oxygen sensor which has been dropped from a height of more than 0.5 m (19.7 in) onto a hard surface such as a concrete floor; use a new one.**

- **Before installing new oxygen sensor, clean exhaust system threads using Oxygen Sensor Thread Cleaner tool J-43897-18 or J-43897-12 and approved anti-seize lubricant.**

Removal and Installation

ABS00D75

HEATED OXYGEN SENSOR 1

Refer to EM-20, "EXHAUST MANIFOLD AND THREE WAY CATALYST" .

DTC P0138 HO2S2

PFP:226A0

Component Description

ABS00CO1

The heated oxygen sensor 2, after three way catalyst (manifold), monitors the oxygen level in the exhaust gas.
Even if switching characteristics of the heated oxygen sensor 1 are shifted, the air-fuel ratio is controlled to stoichiometric, by the signal from the heated oxygen sensor 2.
This sensor is made of ceramic zirconia. The zirconia generates voltage from approximately 1V in richer conditions to 0V in leaner conditions.
Under normal conditions the heated oxygen sensor 2 is not used for engine control operation.

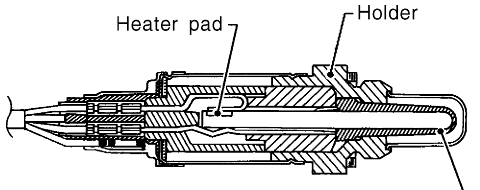

SEF327R

CONSULT-II Reference Value in Data Monitor Mode

ABS00CO2

Specification data are reference values.

MONITOR ITEM	CONDITION		SPECIFICATION
HO2S2 (B1)	● Warm-up condition ● After keeping engine speed between 3,500 and 4,000 rpm for 1 minute and at idle for 1 minute under no load.	Revving engine from idle to 3,000 rpm quickly.	0 - 0.3V ←→ Approx. 0.6 - 1.0V
HO2S2 MNTR (B1)	● Engine: After warming up ● After keeping engine speed between 3,500 and 4,000 rpm for 1 minute and at idle for 1 minute under no load.	Revving engine from idle to 3,000 rpm quickly.	LEAN ←→ RICH

On Board Diagnosis Logic

ABS00CO3

The heated oxygen sensor 2 has a much longer switching time between rich and lean than the heated oxygen sensor 1. The oxygen storage capacity before the three way catalyst (manifold) causes the longer switching time. To judge the malfunctions of heated oxygen sensor 2, ECM monitors whether the voltage is unusually high during the various driving condition such as fuel-cut.

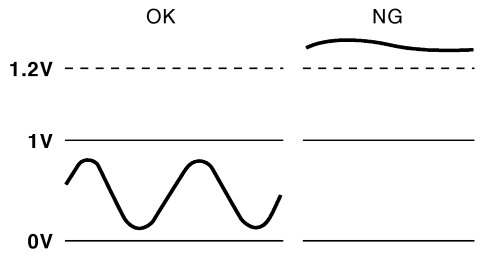

PBIB1848E

DTC No.	Trouble diagnosis name	DTC detecting condition	Possible cause
P0138 0138	Heated oxygen sensor 2 circuit high voltage	An excessively high voltage from the sensor is sent to ECM.	● Harness or connectors (The sensor circuit is open or shorted) ● Heated oxygen sensor 2

DTC Confirmation Procedure

ABS00CO4

NOTE:
If DTC Confirmation Procedure has been previously conducted, always turn ignition switch OFF and wait at least 10 seconds before conducting the next test.

WITH CONSULT-II

1. Turn ignition switch ON and select “DATA MONITOR” mode with CONSULT-II.
2. Start engine and warm it up to the normal operating temperature.
3. Turn ignition switch OFF and wait at least 10 seconds.

4. Start engine and keep the engine speed between 3,500 and 4,000 rpm for at least 1 minute under no load.
5. Let engine idle for 2 minutes.
6. If 1st trip DTC is detected, go to EC-254, "Diagnostic Procedure" .

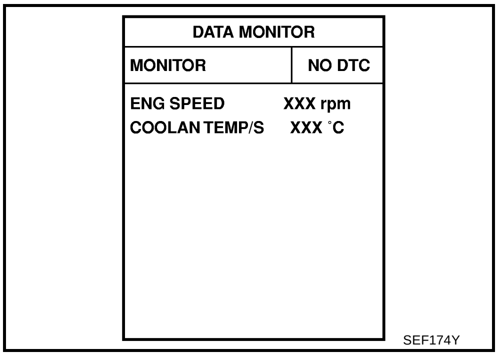

WITH GST

Follow the procedure “WITH CONSULT-II” above.

Wiring Diagram

ABS00CO5

EC-HO2S2-01

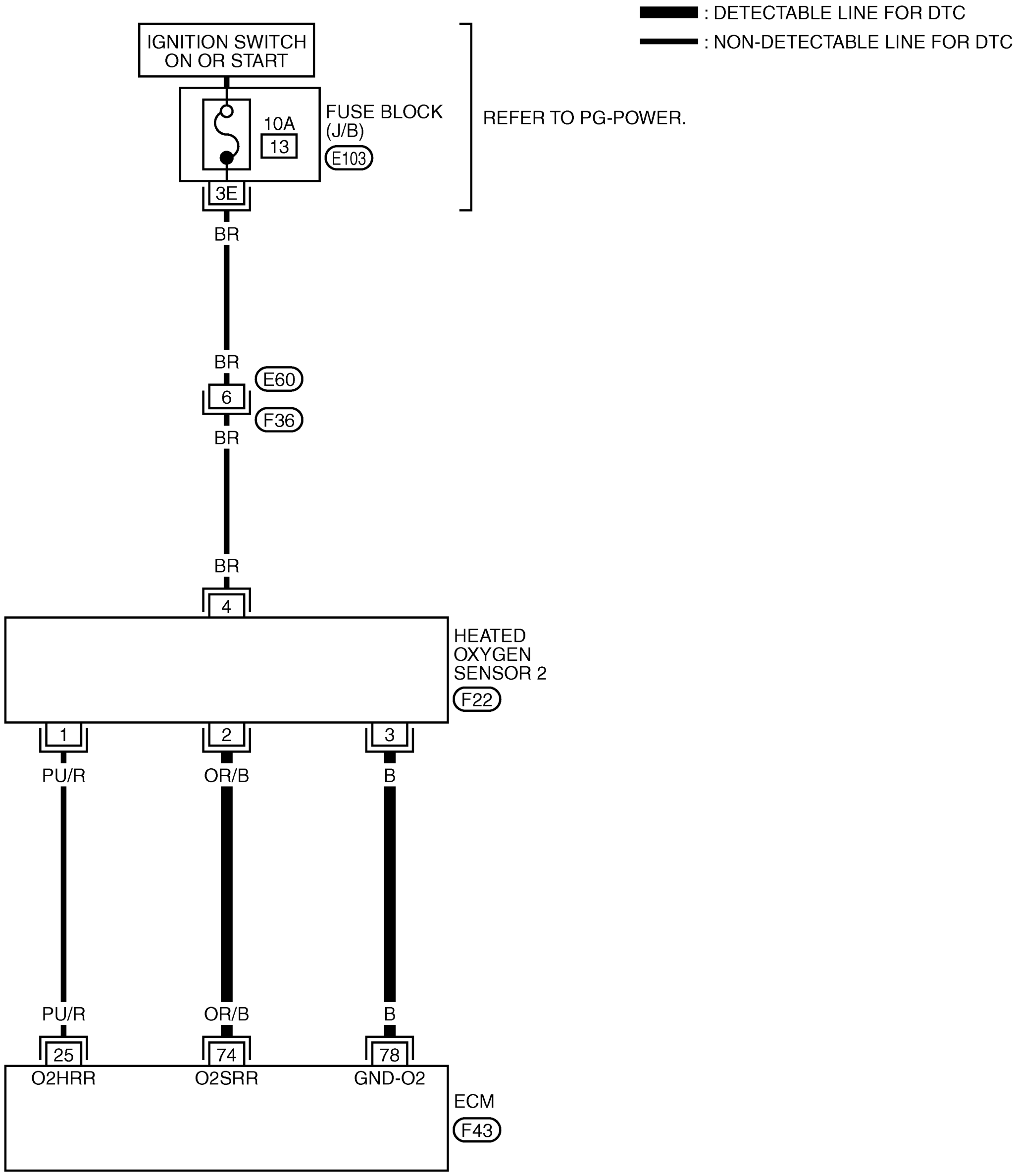

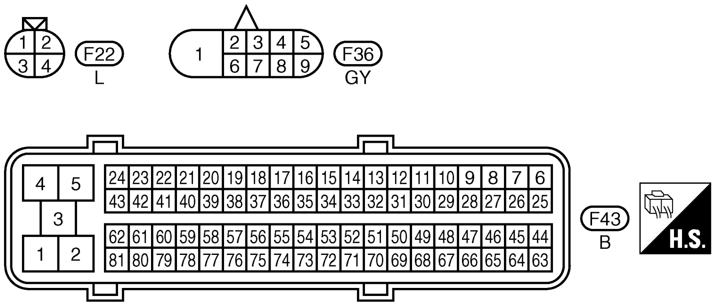

REFER TO THE FOLLOWING.
E103 -FUSE BLOCK-JUNCTION BOX (J/B)

TBWB0116E

Specification data are reference values and are measured between each terminal and ground.

CAUTION:

Do not use ECM ground terminals when measuring input/output voltage. Doing so may result in damage to the ECM's transistor. Use a ground other than ECM terminals, such as the ground.

TERMINAL NO.	WIRE COLOR	ITEM	CONDITION	DATA (DC Voltage)
74	OR/B	Heated oxygen sensor 2	**[Engine is running]** ● **Warm-up condition** ● Revving engine from idle up to 3,000 rpm quickly after the following conditions are met. ● Keeping the engine speed between 3,500 and 4,000 rpm for 1 minute and at idle for 1 minute under no load.	0 - Approximately 1.0V
78	B	Sensor ground (Heated oxygen sensor)	**[Engine is running]** ● **Warm-up condition** ● Idle speed	Approximately 0V

Diagnostic Procedure

ABS00D8B

1. CHECK GROUND CONNECTIONS

1. Turn ignition switch OFF.
2. Loosen and retighten ground three screws on the body.
   Refer to EC-161, "Ground Inspection" .

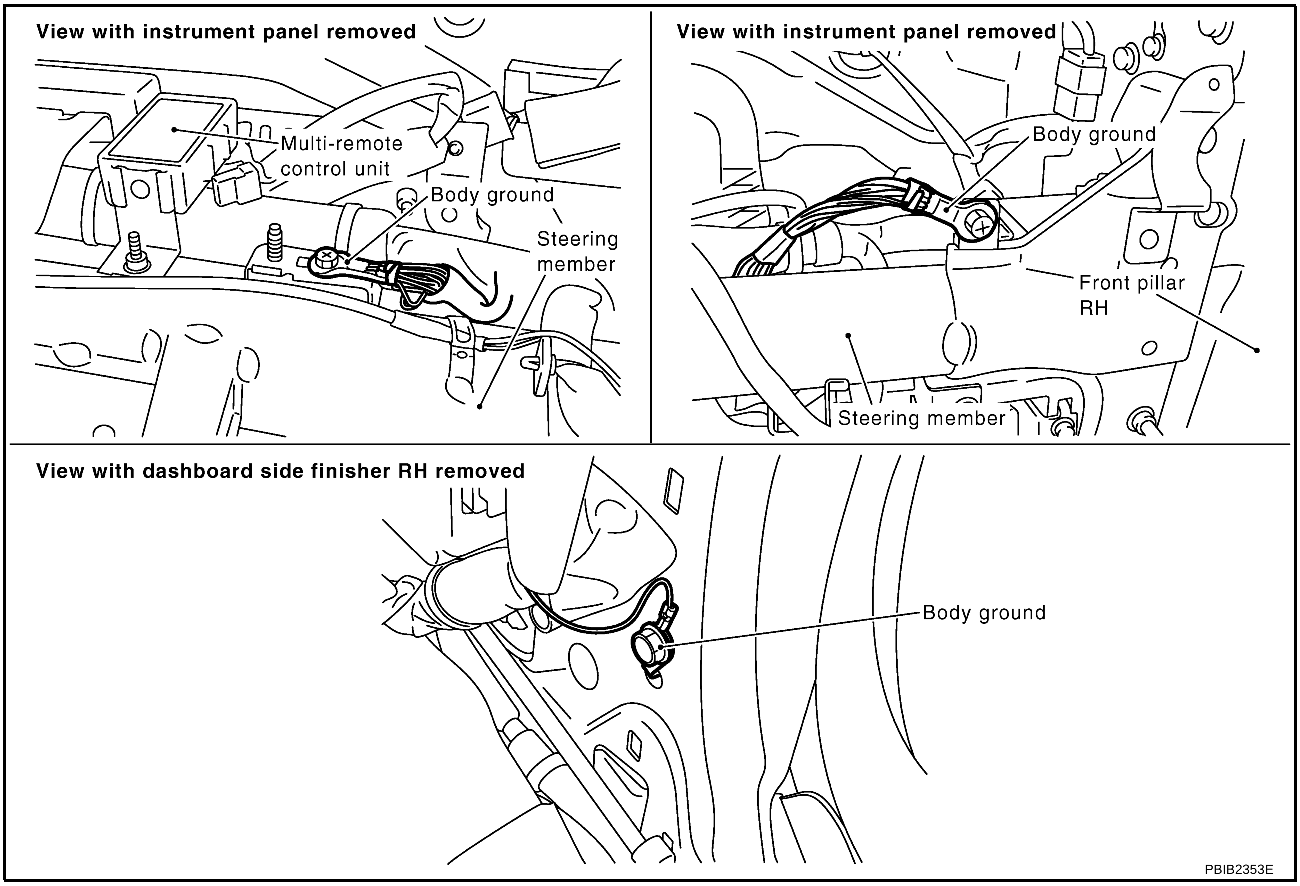

OK or NG

OK >> GO TO 2.

NG >> Repair or replace ground connections.

2. CHECK HO2S2 GROUND CIRCUIT FOR OPEN AND SHORT

1. Disconnect heated oxygen sensor 2 harness connector.
2. Disconnect ECM harness connector.
3. Check harness continuity between HO2S2 terminal 3 and ECM terminal 78.
   Refer to Wiring Diagram.

   Continuity should exist.

4. Also check harness for short to ground and short to power.

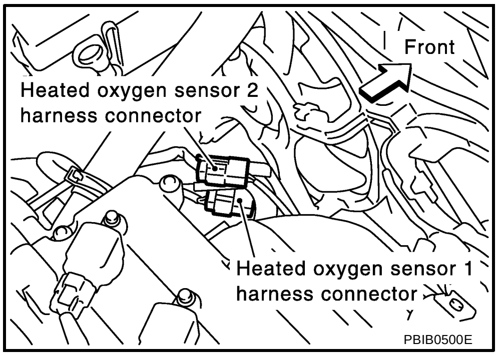

OK or NG

OK >> GO TO 3.
NG >> Repair open circuit or short to ground or short to power in harness or connectors.

3. CHECK HO2S2 INPUT SIGNAL CIRCUIT FOR OPEN AND SHORT

1. Check harness continuity between HO2S2 terminal 2 ECM terminal 74.
   Refer to Wiring Diagram.

   Continuity should exist.

2. Check harness continuity between ECM terminal 74 or HO2S2 terminal 2 and ground.
   Refer to Wiring Diagram.

   Continuity should not exist.

3. Also check harness for short to power.

OK or NG

OK >> GO TO 4.
NG >> Repair open circuit or short to ground or short to power in harness or connectors.

4. CHECK HO2S2 CONNECTOR FOR WATER

Check heated oxygen sensor 2 for water.

Water should not exist.

OK or NG

OK >> GO TO 5.
NG >> Repair or replace harness or connectors.

5. CHECK HEATED OXYGEN SENSOR 2

Refer to EC-255, "Component Inspection" .

OK or NG

OK >> GO TO 6.
NG >> Replace heated oxygen sensor 2.

6. CHECK INTERMITTENT INCIDENT

Refer to EC-153, "TROUBLE DIAGNOSIS FOR INTERMITTENT INCIDENT" .

>> **INSPECTION END**

Component Inspection

ABS00CO7

HEATED OXYGEN SENSOR 2

With CONSULT-II

1. Start engine and warm it up to the normal operating temperature.
2. Turn ignition switch OFF and wait at least 10 seconds.

3. Start engine and keep the engine speed between 3,500 and 4,000 rpm for at least 1 minute under no load.
4. Let engine idle for 1 minute.
5. Select “FUEL INJECTION” in “ACTIVE TEST” mode, and select “HO2S2 (B1)” as the monitor item with CONSULT-II.

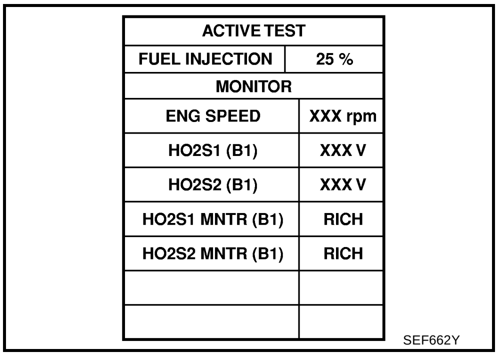

SEF662Y

6. Check “HO2S2 (B1)” at idle speed when adjusting “FUEL INJECTION” to ±25%.

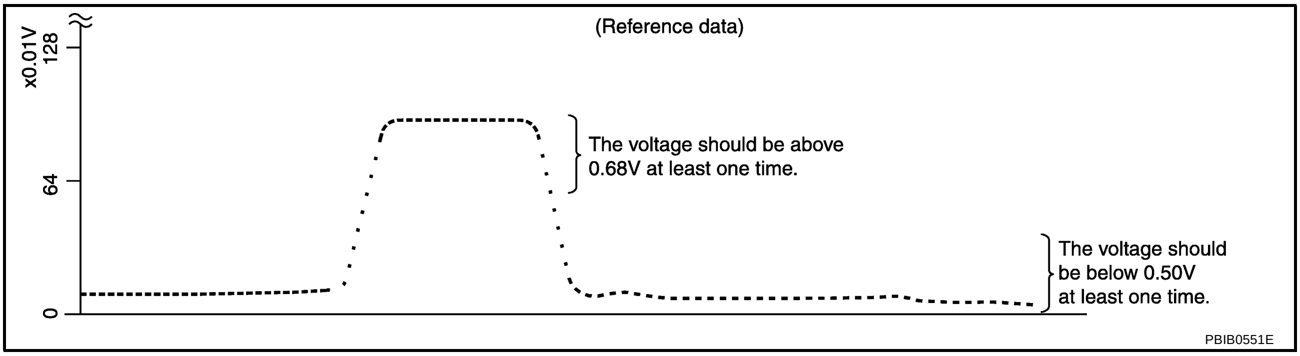

PBIB0551E

“HO2S2 (B1)” should be above 0.68V at least once when the “FUEL INJECTION” is +25%.
“HO2S2 (B1)” should be below 0.50V at least once when the “FUEL INJECTION” is –25%.

CAUTION:

- **Discard any heated oxygen sensor which has been dropped from a height of more than 0.5 m (19.7 in) onto a hard surface such as a concrete floor; use a new one.**
- **Before installing new oxygen sensor, clean exhaust system threads using Oxygen Sensor Thread Cleaner tool J-43897-18 or J-43897-12 and approved anti-seize lubricant.**

Without CONSULT-II

1. Start engine and warm it up to the normal operating temperature.
2. Turn ignition switch OFF and wait at least 10 seconds.
3. Start engine and keep the engine speed between 3,500 and 4,000 rpm for at least 1 minute under no load.
4. Let engine idle for 1 minute.
5. Set voltmeter probes between ECM terminal 74 (HO2S2 signal) and ground.
6. Check the voltage when revving up to 4,000 rpm under no load at least 10 times.
(Depress and release accelerator pedal as soon as possible.)
The voltage should be above 0.68V at least once during this procedure.
If the voltage is above 0.68V at step 6, step 7 is not necessary.

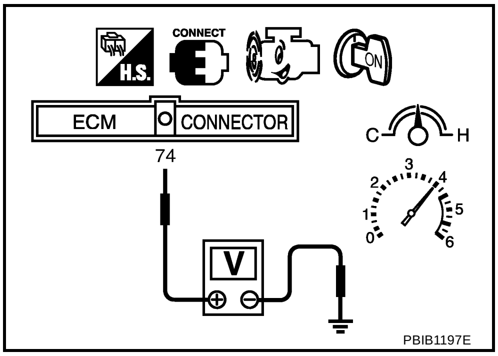

PBIB1197E

7. Keep vehicle idling for 10 minutes, then check voltage. Or check the voltage when coasting from 80 km/h (50 MPH) in D position with OD OFF (A/T), 3rd gear position (M/T).
The voltage should be below 0.50V at least once during this procedure.
8. If NG, replace heated oxygen sensor 2.

CAUTION:

- **Discard any heated oxygen sensor which has been dropped from a height of more than 0.5 m (19.7 in) onto a hard surface such as a concrete floor; use a new one.**

- **Before installing new oxygen sensor, clean exhaust system threads using Oxygen Sensor Thread Cleaner tool J-43897-18 or J-43897-12 and approved anti-seize lubricant.**

Removal and Installation

ABS00CO8

HEATED OXYGEN SENSOR 2

Refer to EM-20, "EXHAUST MANIFOLD AND THREE WAY CATALYST" .

DTC P0139 HO2S2

PFP:226A0

Component Description

ABS00CO9

The heated oxygen sensor 2, after three way catalyst (manifold), monitors the oxygen level in the exhaust gas on each bank.
Even if switching characteristics of the heated oxygen sensor 1 are shifted, the air-fuel ratio is controlled to stoichiometric, by the signal from the heated oxygen sensor 2.
This sensor is made of ceramic zirconia. The zirconia generates voltage from approximately 1V in richer conditions to 0V in leaner conditions.
Under normal conditions the heated oxygen sensor 2 is not used for engine control operation.

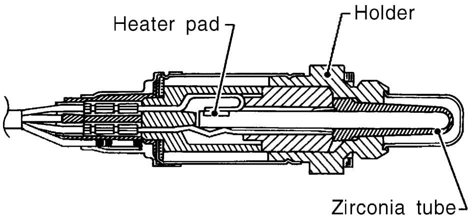

SEF327R

CONSULT-II Reference Value in Data Monitor Mode

ABS00COA

Specification data are reference values.

MONITOR ITEM	CONDITION		SPECIFICATION
HO2S2 (B1)	● Engine: After warming up ● After keeping engine speed between 3,500 and 4,000 rpm for 1 minute and at idle for 1 minute under no load.	Revving engine from idle to 3,000 rpm quickly	0 - 0.3V ←→ Approx. 0.6 - 1.0V
HO2S2 MNTR (B1)	● Engine: After warming up ● After keeping engine speed between 3,500 and 4,000 rpm for 1 minute and at idle for 1 minute under no load.	Revving engine from idle to 3,000 rpm quickly	LEAN ←→ RICH

On Board Diagnosis Logic

ABS00COB

The heated oxygen sensor 2 has a much longer switching time between rich and lean than the heated oxygen sensor 1. The oxygen storage capacity before the three way catalyst (manifold) causes the longer switching time. To judge the malfunctions of heated oxygen sensor 2, ECM monitors whether the switching response of the sensor's voltage is faster than specified during the various driving condition such as fuel-cut.

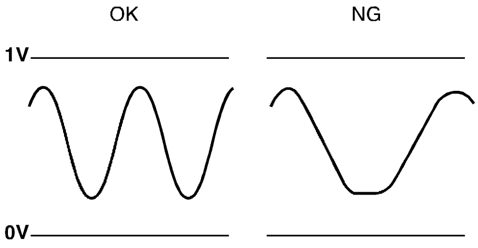

SEF302U

DTC No.	Trouble diagnosis name	DTC detecting condition	Possible cause
P0139 0139	Heated oxygen sensor 2 circuit slow response	It takes more time for the sensor to respond between rich and lean than the specified time.	● Harness or connectors (The sensor circuit is open or shorted) ● Heated oxygen sensor 2 ● Fuel pressure ● Fuel injector ● Intake air leaks

DTC Confirmation Procedure

ABS00COC

NOTE:
If DTC Confirmation Procedure has been previously conducted, always turn ignition switch OFF and wait at least 10 seconds before conducting the next test.
TESTING CONDITION:
For the best results, perform “DTC WORK SUPPORT” at a temperature of 0 to 30°C (32 to 86°F).

WITH CONSULT-II

1. Turn ignition switch ON and select “DATA MONITOR” mode with CONSULT-II.
2. Start engine and warm it up to normal operating temperature.
3. Turn ignition switch OFF and wait at least 10 seconds.
4. Start engine and keep the engine speed between 3,500 and 4,000 rpm for at lest 1 minute under no load.
5. Let engine idle for 1 minute.
6. Make sure that “COOLAN TEMP/S” indicates more than 70°C (158°F).
   If not, warm up engine and go to next step when “COOLAN TEMP/S” indication reaches to 70°C (158°F).

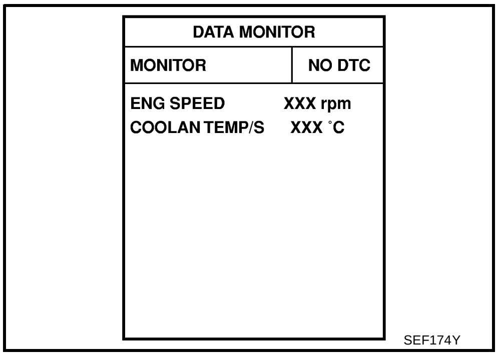

7. Select “HO2S2 (B1) P0139” of “HO2S2” in “DTC WORK SUPPORT” mode with CONSULT-II and follow the instruction of CONSULT-II.

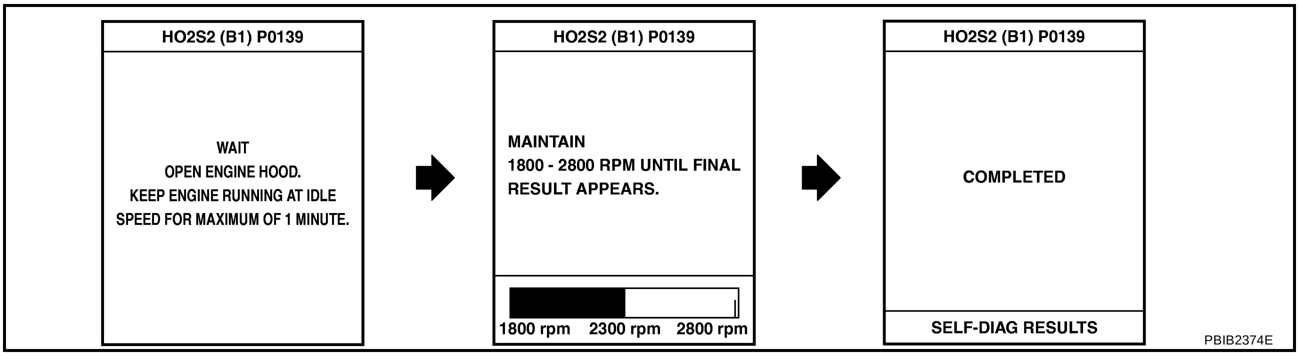

NOTE:
It will take at most 10 minutes until “COMPLETED” is displayed.

8. Make sure that “OK” is displayed after touching “SELF-DIAG RESULTS”.
   If “NG” is displayed, refer to EC-262, "Diagnostic Procedure" .
   If “CAN NOT BE DIAGNOSED” is displayed, perform the following.

a. Turn ignition switch OFF and leave the vehicle in a cool place (soak the vehicle).
b. Return to step 1.

Overall Function Check

ABS00COD

Use this procedure to check the overall function of the heated oxygen sensor 2 circuit. During this check, a 1st trip DTC might not be confirmed.

CAUTION:
Always drive vehicle at a safe speed.

WITH GST

1. Start engine and warm it up to the normal operating temperature.
2. Turn ignition switch OFF and wait at least 10 seconds.
3. Start engine and keep the engine speed between 3,500 and 4,000 rpm for at least 1 minute under no load.
4. Let engine idle for 1 minute.
5. Set voltmeter probes between ECM terminal 74 (HO2S2 signal) and ground.

6. Check the voltage when revving up to 4,000 rpm under no load at least 10 times.
(Depress and release accelerator pedal as soon as possible.)
A change of voltage should be more than 0.06V for 1 second during this procedure.
If the voltage can be confirmed in step 6, step 7 is not necessary.
7. Keep vehicle at idling for 10 minutes, then check the voltage. Or check the voltage when coasting from 80 km/h (50 MPH) in D position with OD OFF (A/T), 3rd gear position (M/T).
A change of voltage should be more than 0.06V for 1 second during this procedure.
8. If NG, go to EC-262, "Diagnostic Procedure" .

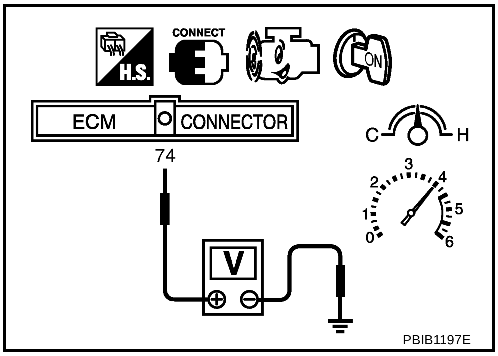

Wiring Diagram

ABS00COE

EC-HO2S2-01

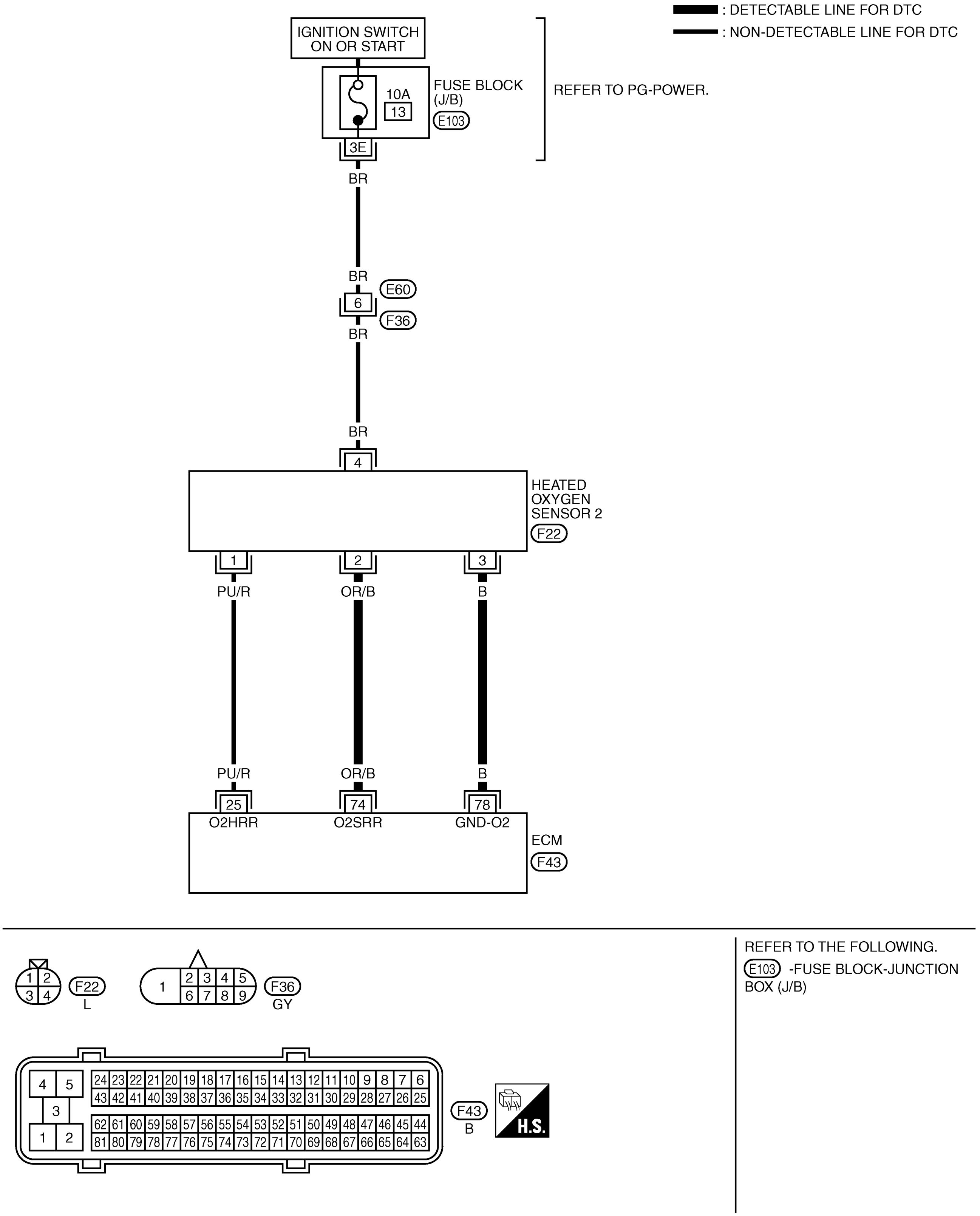

TBWB0116E

Specification data are reference values and are measured between each terminal and ground.

CAUTION:

Do not use ECM ground terminals when measuring input/output voltage. Doing so may result in damage to the ECM's transistor. Use a ground other than ECM terminals, such as the ground.

TER-MINAL NO.	WIRE COLOR	ITEM	CONDITION	DATA (DC Voltage)
74	OR/B	Heated oxygen sensor 2	**[Engine is running]** ● **Warm-up condition** ● Revving engine from idle up to 3,000 rpm quickly after the following conditions are met. ● Keeping the engine speed between 3,500 and 4,000 rpm for 1 minute and at idle for 1 minute under no load.	0 - Approximately 1.0V
78	B	Sensor ground (Heated oxygen sensor)	**[Engine is running]** ● **Warm-up condition** ● Idle speed	Approximately 0V

Diagnostic Procedure

ABS00COF

1. CHECK GROUND CONNECTIONS

1. Turn ignition switch OFF.
2. Loosen and retighten three ground screws on the body. Refer to EC-161, "Ground Inspection" .

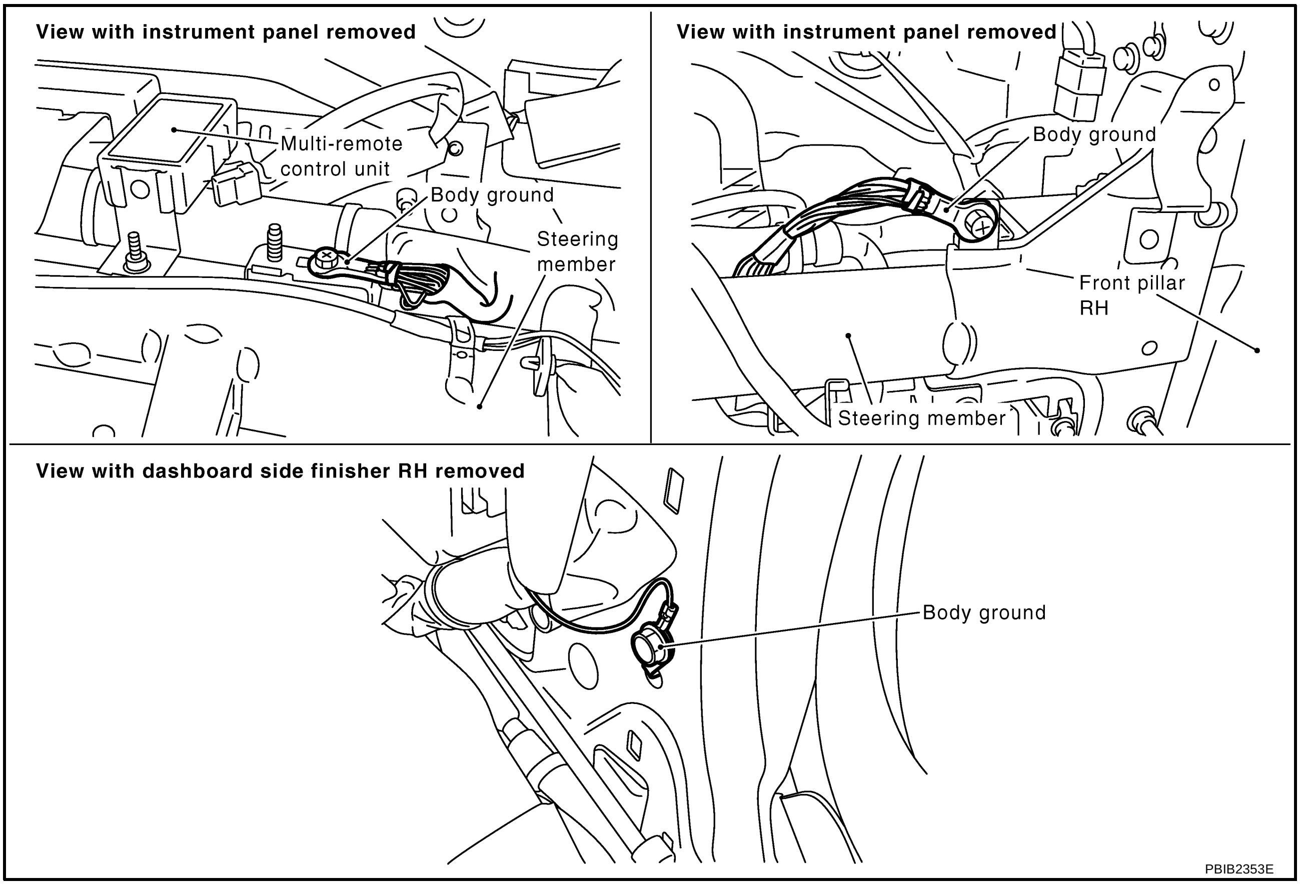

OK or NG

OK >> GO TO 2.

NG >> Repair or replace ground connections.

A EC C D E F G H I J K L M

2. CLEAR THE SELF-LEARNING DATA

With CONSULT-II

1. Start engine and warm it up to normal operating temperature.
2. Select “SELF-LEARNING CONT” in “WORK SUPPORT” mode with CONSULT-II.
3. Clear the self-learning control coefficient by touching “CLEAR”.
4. Run engine for at least 10 minutes at idle speed.
Is the 1st trip DTC P0171 or P0172 detected?
Is it difficult to start engine?

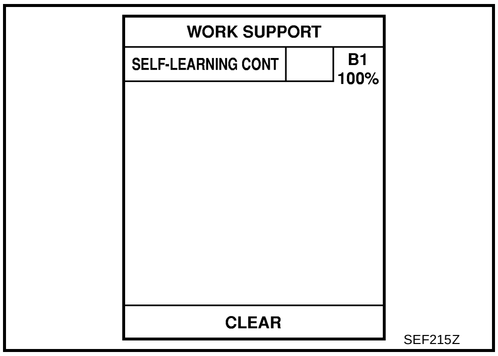

Without CONSULT-II

1. Start engine and warm it up to normal operating temperature.
2. Turn ignition switch OFF.
3. Disconnect mass air flow sensor harness connector, and restart and run engine for at least 5 seconds at idle speed.
4. Stop engine and reconnect mass air flow sensor harness connector.
5. Make sure DTC P0102 is displayed.
6. Erase the DTC memory. Refer to EC-59, "HOW TO ERASE EMISSION-RELATED DIAGNOSTIC INFORMATION" .
7. Make sure DTC P0000 is displayed.
8. Run engine for at least 10 minutes at idle speed.
Is the 1st trip DTC P0171 or P0172 detected?
Is it difficult to start engine?

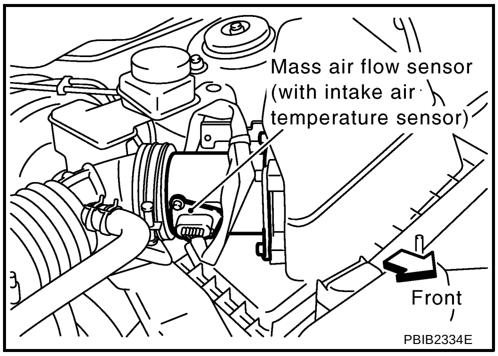

Yes or No

Yes >> Perform trouble diagnosis for DTC P0171 or P0172. Refer to EC-266 or EC-273 .
No >> GO TO 3.

3. CHECK HO2S2 GROUND CIRCUIT FOR OPEN AND SHORT

1. Turn ignition switch OFF.
2. Disconnect ECM harness connector.
3. Disconnect heated oxygen sensor 2 harness connector.
4. Check harness continuity between ECM terminal 78 and HO2S2 terminal 3.
Refer to Wiring Diagram.

Continuity should exist.

5. Also check harness for short to ground or short to power.

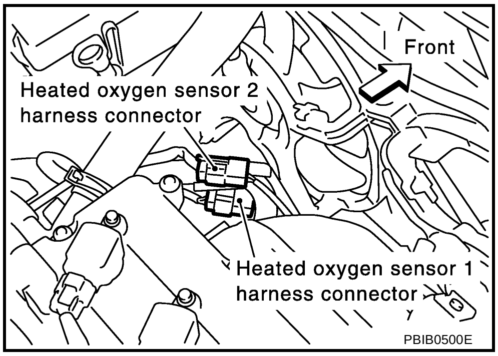

OK or NG

OK >> GO TO 4.
NG >> Repair open circuit or short to ground or short to power in harness or connectors.

4. CHECK HO2S2 INPUT SIGNAL CIRCUIT FOR OPEN AND SHORT

1. Check harness continuity between ECM terminal 74 and HO2S2 terminal 2.
   Refer to Wiring Diagram.

   Continuity should exist.

2. Check harness continuity between ECM terminal 74 or HO2S2 terminal 2 and ground.
   Refer to Wiring Diagram.

   Continuity should not exist.

3. Also check harness for short to ground or short to power.

OK or NG

OK >> GO TO 5.
NG >> Repair open circuit or short to ground or short to power in harness or connectors.

5. CHECK HEATED OXYGEN SENSOR 2

Refer to EC-264, "Component Inspection" .

OK or NG

OK >> GO TO 6.
NG >> Replace heated oxygen sensor 2.

6. CHECK INTERMITTENT INCIDENT

Refer to EC-153, "TROUBLE DIAGNOSIS FOR INTERMITTENT INCIDENT" .

>> **INSPECTION END**

Component Inspection

ABS00COG

HEATED OXYGEN SENSOR 2

With CONSULT-II

1. Start engine and warm it up to the normal operating temperature.
2. Turn ignition switch OFF and wait at least 10 seconds.
3. Start engine and keep the engine speed between 3,500 and 4,000 rpm for at least 1 minute under no load.
4. Let engine idle for 1 minute.
5. Select “FUEL INJECTION” in “ACTIVE TEST” mode, and select “HO2S2 (B1)” as the monitor item with CONSULT-II.

ACTIVE TEST	
FUEL INJECTION	25 %
MONITOR	
ENG SPEED	XXX rpm
HO2S1 (B1)	XXX V
HO2S2 (B1)	XXX V
HO2S1 MNTR (B1)	RICH
HO2S2 MNTR (B1)	RICH

SEF662Y

6. Check “HO2S2 (B1)” at idle speed when adjusting “FUEL INJECTION” to ±25%.

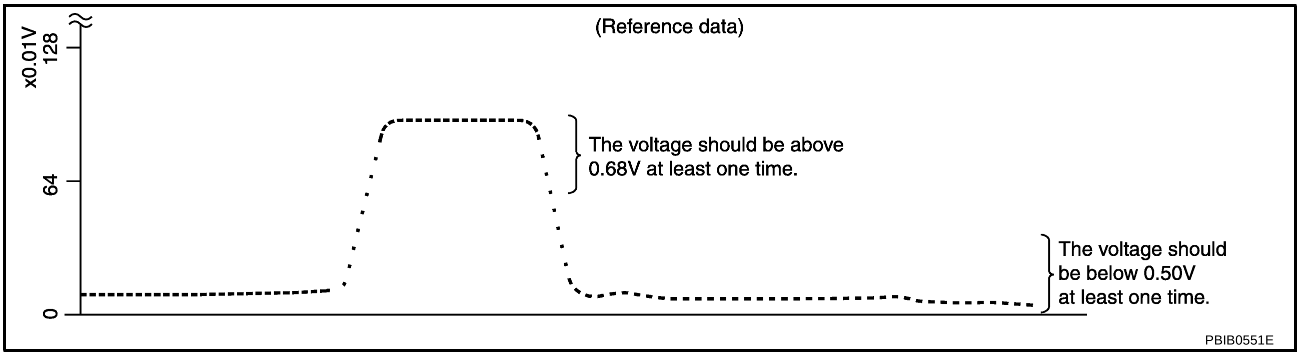

“HO2S2 (B1)” should be above 0.68V at least once when the “FUEL INJECTION” is +25%.
“HO2S2 (B1)” should be below 0.50V at least once when the “FUEL INJECTION” is –25%.

CAUTION:

- **Discard any heated oxygen sensor which has been dropped from a height of more than 0.5 m (19.7 in) onto a hard surface such as a concrete floor; use a new one.**
- **Before installing new oxygen sensor, clean exhaust system threads using Oxygen Sensor Thread Cleaner tool J-43897-18 or J-43897-12 and approved anti-seize lubricant.**

Without CONSULT-II

1. Start engine and warm it up to the normal operating temperature.
2. Turn ignition switch OFF and wait at least 10 seconds.
3. Start engine and keep the engine speed between 3,500 and 4,000 rpm for at least 1 minute under no load.
4. Let engine idle for 1 minute.
5. Set voltmeter probes between ECM terminal 74 (HO2S2 signal) and ground.
6. Check the voltage when revving up to 4,000 rpm under no load at least 10 times.
   (Depress and release accelerator pedal as soon as possible.)
   The voltage should be above 0.68V at least once during this procedure.
   If the voltage is above 0.68V at step 6, step 7 is not necessary.

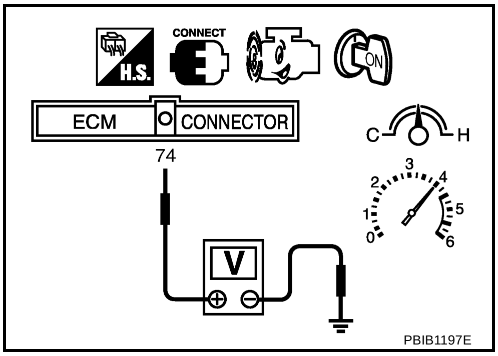

7. Keep vehicle idling for 10 minutes, then check voltage. Or check the voltage when coasting from 80 km/h (50 MPH) in D position with OD OFF (A/T), 3rd gear position (M/T).
   The voltage should be below 0.50V at least once during this procedure.
8. If NG, replace heated oxygen sensor 2.

CAUTION:

- **Discard any heated oxygen sensor which has been dropped from a height of more than 0.5 m (19.7 in) onto a hard surface such as a concrete floor; use a new one.**
- **Before installing new oxygen sensor, clean exhaust system threads using Oxygen Sensor Thread Cleaner tool J-43897-18 or J-43897-12 and approved anti-seize lubricant.**

Removal and Installation

ABS00COH

HEATED OXYGEN SENSOR 2

Refer to EM-20, "EXHAUST MANIFOLD AND THREE WAY CATALYST" .

DTC P0171 FUEL INJECTION SYSTEM FUNCTION

PFP:16600

On Board Diagnosis Logic

ABS00D76

With the Air-Fuel Mixture Ratio Self-Learning Control, the actual mixture ratio can be brought closely to the theoretical mixture ratio based on the mixture ratio feedback signal from the heated oxygen sensor 1. The ECM calculates the necessary compensation to correct the offset between the actual and the theoretical ratios.
In case the amount of the compensation value is extremely large (The actual mixture ratio is too lean.), the ECM judges the condition as the fuel injection system malfunction and lights up the MIL (2 trip detection logic).

Sensor	Input Signal to ECM	ECM function	Actuator
Heated oxygen sensor 1	Density of oxygen in exhaust gas (Mixture ratio feedback signal)	Fuel injection control	Fuel injector

DTC No.	Trouble diagnosis name	DTC detecting condition	Possible Cause
P0171 0171	Fuel injection system too lean	● Fuel injection system does not operate properly. ● The amount of mixture ratio compensation is too large. (The mixture ratio is too lean.)	● Intake air leaks ● Heated oxygen sensor 1 ● Fuel injector ● Exhaust gas leaks ● Incorrect fuel pressure ● Lack of fuel ● Mass air flow sensor ● Incorrect PCV hose connection

DTC Confirmation Procedure

ABS00D77

NOTE:
If DTC Confirmation Procedure has been previously conducted, always turn ignition switch OFF and wait at least 10 seconds before conducting the next test.

WITH CONSULT-II

1. Start engine and warm it up to normal operating temperature.
2. Turn ignition switch OFF and wait at least 10 seconds.
3. Turn ignition switch ON and select “SELF-LEARNING CONT” in “WORK SUPPORT” mode with CONSULT-II.
4. Clear the self-learning control coefficient by touching “CLEAR”.
5. Select “DATA MONITOR” mode with CONSULT-II.
6. Start engine again and let it idle for at least 10 minutes.
   The 1st trip DTC P0171 should be detected at this stage, if a malfunction exists. If so, go to EC-269, "Diagnostic Procedure" .

   NOTE:
   If 1st trip DTC is not detected during above procedure, performing the following procedure is advised.

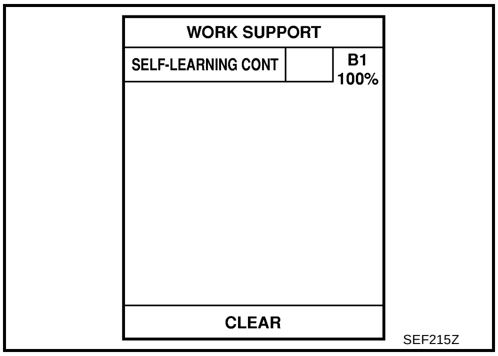

a. Turn ignition switch OFF and wait at least 10 seconds.
b. Start engine and drive the vehicle under the similar conditions to (1st trip) Freeze Frame Data for 10 minutes. Refer to the table below.
   Hold the accelerator pedal as steady as possible.

   The similar conditions to (1st trip) Freeze Frame Data means the vehicle operation that the following conditions should be satisfied at the same time.

Engine speed	Engine speed in the freeze frame data ± 400 rpm
Vehicle speed	Vehicle speed in the freeze frame data ± 10 km/h (6 MPH)

Engine coolant temperature (T) condition	When the freeze frame data shows lower than 70 °C (158 °F), T should be lower than 70 °C (158 °F).
	When the freeze frame data shows higher than or equal to 70 °C (158 °F), T should be higher than or equal to 70 °C (158 °F).

7. If it is difficult to start engine at step 6, the fuel injection system has a malfunction, too.
8. Crank engine while depressing accelerator pedal. If engine starts, go to EC-269, "Diagnostic Procedure" . If engine does not start, check exhaust and intake air leak visually.

WITH GST

1. Start engine and warm it up to normal operating temperature.
2. Turn ignition switch OFF and wait at least 10 seconds.
3. Disconnect mass air flow sensor harness connector.
4. Restart engine and let it idle for at least 5 seconds.
5. Stop engine and reconnect mass air flow sensor harness connector.
6. Select Service $03 with GST. Make sure DTC P0102 is detected.
7. Select Service $04 with GST and erase the DTC P0102.
8. Start engine again and let it idle for at least 10 minutes.
9. Select Service $07 with GST. The 1st trip DTC P0171 should be detected at this stage, if a malfunction exists. If so, go to EC-269, "Diagnostic Procedure" .

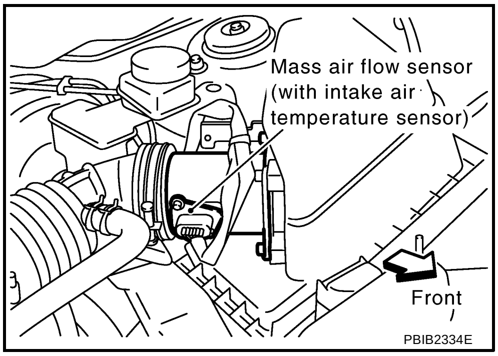

NOTE:
If 1st trip DTC is not detected during above procedure, performing the following procedure is advised.

a. Turn ignition switch OFF and wait at least 10 seconds.
b. Start engine and drive the vehicle under the similar conditions to (1st trip) Freeze Frame Data for 10 minutes. Refer to the table below.
Hold the accelerator pedal as steady as possible.

The similar conditions to (1st trip) Freeze Frame Data means the vehicle operation that the following conditions should be satisfied at the same time.

Engine speed	Engine speed in the freeze frame data ± 400 rpm
Vehicle speed	Vehicle speed in the freeze frame data ± 10 km/h (6 MPH)
Engine coolant temperature (T) condition	When the freeze frame data shows lower than 70 °C (158 °F), T should be lower than 70 °C (158 °F).
	When the freeze frame data shows higher than or equal to 70 °C (158 °F), T should be higher than or equal to 70 °C (158 °F).

10. If it is difficult to start engine at step 8, the fuel injection system has a malfunction.
11. Crank engine while depressing accelerator pedal. If engine starts, go to EC-269, "Diagnostic Procedure" . If engine does not start, check exhaust and intake air leak visually.

Wiring Diagram

ABS00D78

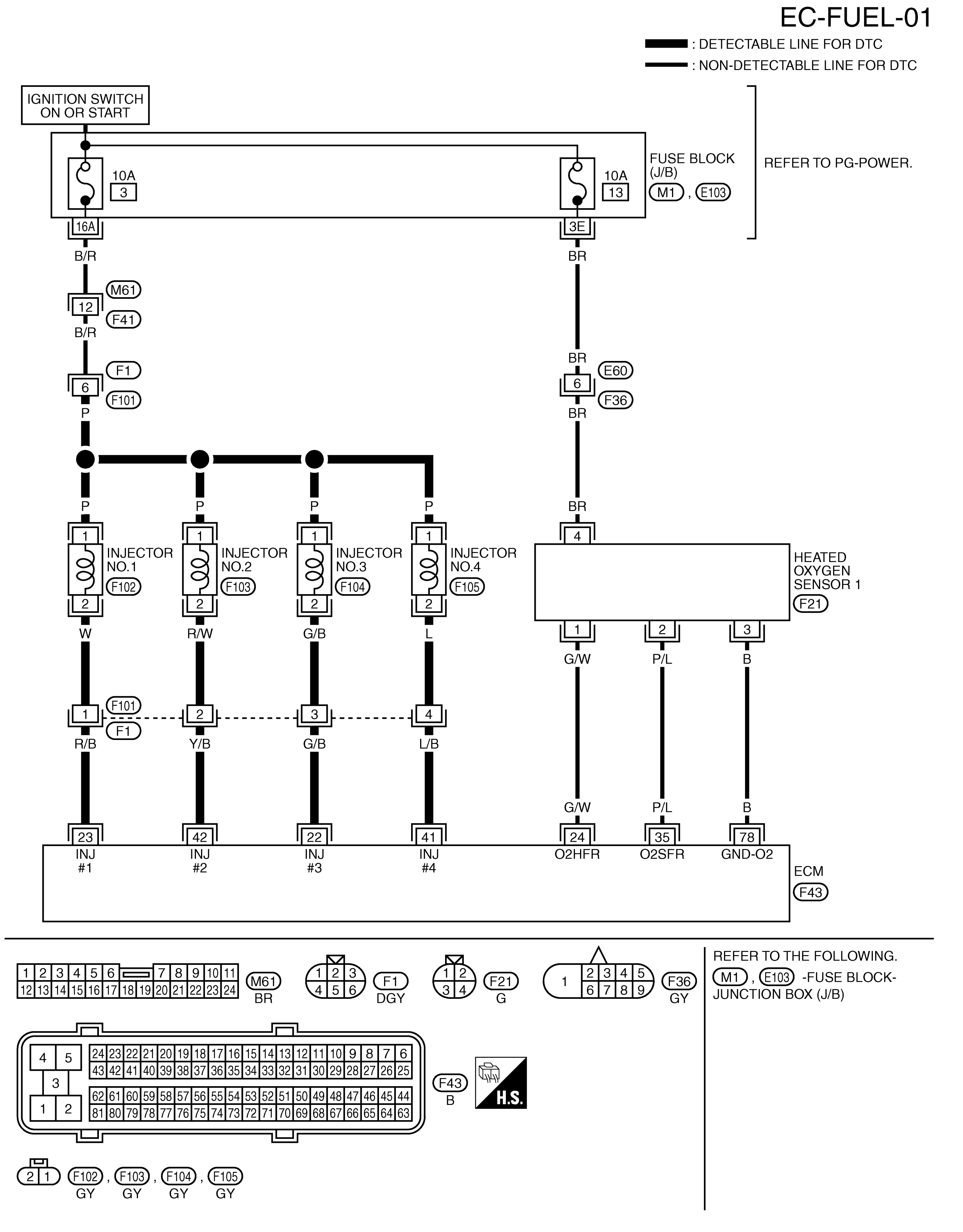

Diagnostic Procedure

ABS00D8C

1. CHECK EXHAUST GAS LEAK

1. Start engine and run it at idle.
2. Listen for an exhaust gas leak before three way catalyst (manifold).

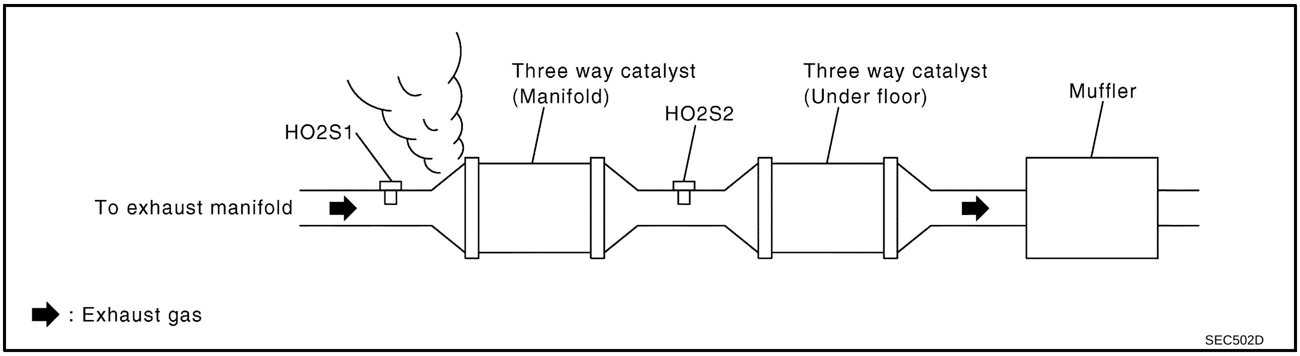

OK or NG

OK >> GO TO 2.
NG >> Repair or replace.

2. CHECK FOR INTAKE AIR LEAK AND PCV HOSE

1. Listen for an intake air leak after the mass air flow sensor.
2. Check PCV hose connection.

OK or NG

OK >> GO TO 3.
NG >> Repair or replace.

3. CHECK HEATED OXYGEN SENSOR 1 CIRCUIT FOR OPEN AND SHORT

1. Turn ignition switch OFF.
2. Disconnect heated oxygen sensor 1 (HO2S1) harness connector.
3. Disconnect ECM harness connector.
4. Check harness continuity between HO2S1 terminal 2 and ECM terminal 35.
   Refer to Wiring Diagram.

   Continuity should exist.

5. Check harness continuity between ECM terminal 35 or HO2S1 terminal 2 and ground.
   Refer to Wiring Diagram.

   Continuity should not exist.

6. Also check harness for short to power and short ground.

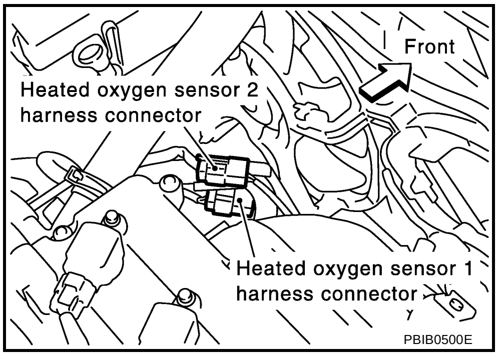

OK or NG

OK >> GO TO 4.
NG >> Repair open circuit or short to ground or short to power in harness or connectors.

4. CHECK FUEL PRESSURE

1. Release fuel pressure to zero. Refer to EC-90, "FUEL PRESSURE RELEASE" .
2. Install fuel pressure gauge and check fuel pressure. Refer to EC-91, "FUEL PRESSURE CHECK" .

At idling: Approximately 350 kPa (3.5 bar, 3.57 kg/cm^2 , 51 psi)

OK or NG

OK >> GO TO 6.
NG >> GO TO 5.

5. DETECT MALFUNCTIONING PART

Check the following.

- Fuel pump and circuit (Refer to EC-613 .)
- Fuel pressure regulator (Refer to EC-90 .)
- Fuel lines (Refer to EM-30, "FUEL INJECTOR AND FUEL TUBE" .)
- Fuel filter for clogging

>> Repair or replace.

6. CHECK MASS AIR FLOW SENSOR

With CONSULT-II

1. Install all removed parts.
2. Check “MASS AIR FLOW” in “DATA MONITOR” mode with CONSULT-II.

1.0 - 4.0 g·m/sec: at idling
4.0 - 10 g·m/sec: at 2,500 rpm

With GST

1. Install all removed parts.
2. Check mass air flow sensor signal in Service $01 with GST.

1.0 - 4.0 g·m/sec: at idling
4.0 - 10 g·m/sec: at 2,500 rpm

OK or NG

OK >> GO TO 7.
NG >> Check connectors for rusted terminals or loose connections in the mass air flow sensor circuit or ground. Refer to EC-181 .

7. CHECK FUNCTION OF INJECTORS

With CONSULT-II

1. Start engine.
2. Perform "POWER BALANCE" in "ACTIVE TEST" mode with CONSULT-II.
3. Make sure that each circuit produces a momentary engine speed drop.

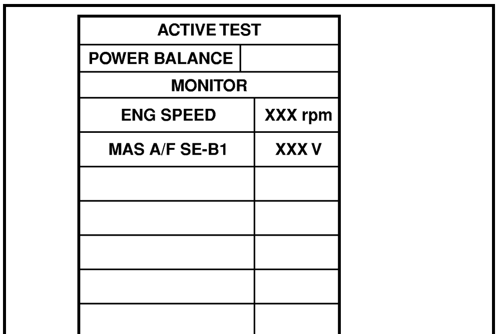

PBIB0133E

Without CONSULT-II

1. Start engine.
2. Listen to each injector operating sound.

Clicking noise should be heard.

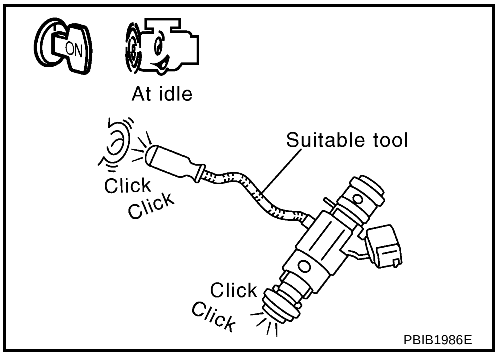

PBIB1986E

OK or NG

OK >> GO TO 8.
NG >> Perform trouble diagnosis for INJECTOR CIRCUIT, refer to EC-607, "INJECTOR CIRCUIT" .

8. CHECK INJECTOR

1. Confirm that the engine is cooled down and there are no fire hazards near the vehicle.
2. Turn ignition switch OFF.
3. Remove injector gallery assembly. Refer to EM-30, "FUEL INJECTOR AND FUEL TUBE" .
   Keep fuel hose and all injectors connected to injector gallery.
   The injector harness connectors should remain connected.
4. Disconnect all ignition coil harness connectors.
5. Prepare pans or saucers under each injector.
6. Crank engine for about 3 seconds. Make sure that fuel sprays out from injectors.

Fuel should be sprayed evenly for each injector.

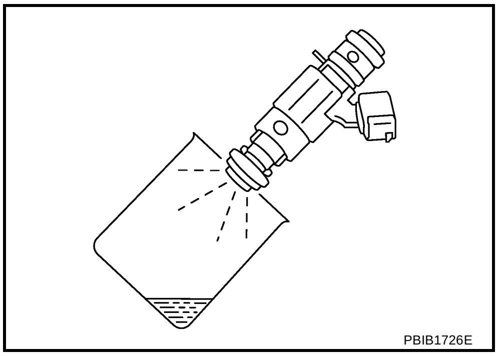

PBIB1726E

OK or NG

OK >> GO TO 9.
NG >> Replace injectors from which fuel does not spray out. Always replace O-ring with new ones.

9. CHECK INTERMITTENT INCIDENT

Refer to EC-153, "TROUBLE DIAGNOSIS FOR INTERMITTENT INCIDENT" .

>> **INSPECTION END**

DTC P0172 FUEL INJECTION SYSTEM FUNCTION

PFP:16600

On Board Diagnosis Logic

ABS00D7A

With the Air-Fuel Mixture Ratio Self-Learning Control, the actual mixture ratio can be brought closely to the theoretical mixture ratio based on the mixture ratio feedback signal from the heated oxygen sensor 1. The ECM calculates the necessary compensation to correct the offset between the actual and the theoretical ratios.
In case the amount of the compensation value is extremely large (The actual mixture ratio is too rich.), the ECM judges the condition as the fuel injection system malfunction and lights up the MIL (2 trip detection logic).

Sensor	Input Signal to ECM	ECM function	Actuator
Heated oxygen sensor 1	Density of oxygen in exhaust gas (Mixture ratio feedback signal)	Fuel injection control	Fuel injector

DTC No.	Trouble diagnosis name	DTC detecting condition	Possible Cause
P0172 0172	Fuel injection system too rich	• Fuel injection system does not operate properly. • The amount of mixture ratio compensation is too large. (The mixture ratio is too rich.)	• Heated oxygen sensor 1 • Fuel injector • Exhaust gas leaks • Incorrect fuel pressure • Mass air flow sensor

DTC Confirmation Procedure

ABS00D7B

NOTE:
If DTC Confirmation Procedure has been previously conducted, always turn ignition switch OFF and wait at least 10 seconds before conducting the next test.

WITH CONSULT-II

1. Start engine and warm it up to normal operating temperature.
2. Turn ignition switch OFF and wait at least 10 seconds.
3. Turn ignition switch ON and select “SELF-LEARNING CONT” in “WORK SUPPORT” mode with CONSULT-II.
4. Clear the self-learning control coefficient by touching “CLEAR”.
5. Select “DATA MONITOR” mode with CONSULT-II.
6. Start engine again and let it idle for at least 10 minutes.
   The 1st trip DTC P0172 should be detected at this stage, if a malfunction exists. If so, go to EC-276, "Diagnostic Procedure" .
   NOTE:
   If 1st trip DTC is not detected during above procedure, performing the following procedure is advised.

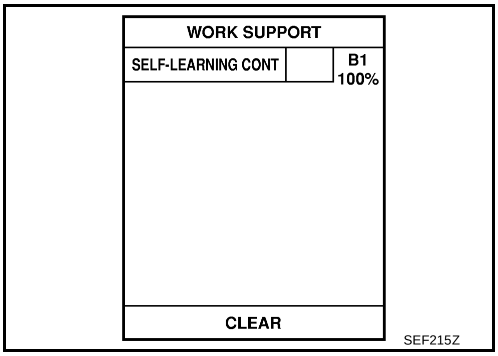

a. Turn ignition switch OFF and wait at least 10 seconds.
b. Start engine and drive the vehicle under the similar conditions to (1st trip) Freeze Frame Data for a certain time. Refer to the table below.
   Hold the accelerator pedal as steady as possible.

   The similar conditions to (1st trip) Freeze Frame Data means the vehicle operation that the following conditions should be satisfied at the same time.

Engine speed	Engine speed in the freeze frame data ± 400 rpm
Vehicle speed	Vehicle speed in the freeze frame data ± 10 km/h (6 MPH)
Engine coolant temperature (T) condition	When the freeze frame data shows lower than 70 °C (158 °F), T should be lower than 70 °C (158 °F).
	When the freeze frame data shows higher than or equal to 70 °C (158 °F), T should be higher than or equal to 70 °C (158 °F).

7. If it is difficult to start engine at step 6, the fuel injection system has a malfunction, too.

8. Crank engine while depressing accelerator pedal.
If engine starts, go to EC-276, "Diagnostic Procedure" . If engine does not start, remove spark plugs and check for fouling, etc.

WITH GST

1. Start engine and warm it up to normal operating temperature.
2. Turn ignition switch OFF and wait at least 10 seconds.
3. Disconnect mass air flow sensor harness connector. Then restart and run engine for at least 5 seconds at idle speed.
4. Stop engine and reconnect mass air flow sensor harness connector.
5. Select Service $03 with GST. Make sure DTC P0102 is detected.
6. Select Service $04 with GST and erase the DTC P0102.
7. Start engine again and let it idle for at least 10 minutes.
8. Select Service $07 with GST. The 1st trip DTC P0172 should be detected at this stage, if a malfunction exists. If so, go to EC-276, "Diagnostic Procedure" .

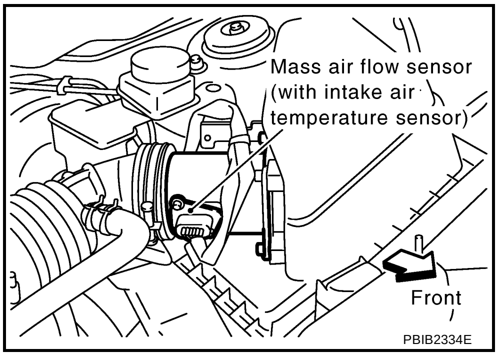

NOTE:
If 1st trip DTC is not detected during above procedure, performing the following procedure is advised.

a. Turn ignition switch OFF and wait at least 10 seconds.
b. Start engine and drive the vehicle under the similar conditions to (1st trip) Freeze Frame Data for a certain time. Refer to the table below.
Hold the accelerator pedal as steady as possible.

The similar conditions to (1st trip) Freeze Frame Data means the vehicle operation that the following conditions should be satisfied at the same time.

Engine speed	Engine speed in the freeze frame data ± 400 rpm
Vehicle speed	Vehicle speed in the freeze frame data ± 10 km/h (6 MPH)
Engine coolant temperature (T) condition	When the freeze frame data shows lower than 70 °C (158 °F), T should be lower than 70 °C (158 °F).
	When the freeze frame data shows higher than or equal to 70 °C (158 °F), T should be higher than or equal to 70 °C (158 °F).

9. If it is difficult to start engine at step 7, the fuel injection system has a malfunction.
10. Crank engine while depressing accelerator pedal.
If engine starts, go to EC-276, "Diagnostic Procedure" . If engine does not start, remove ignition plugs and check for fouling, etc.

Wiring Diagram

ABS00D7C

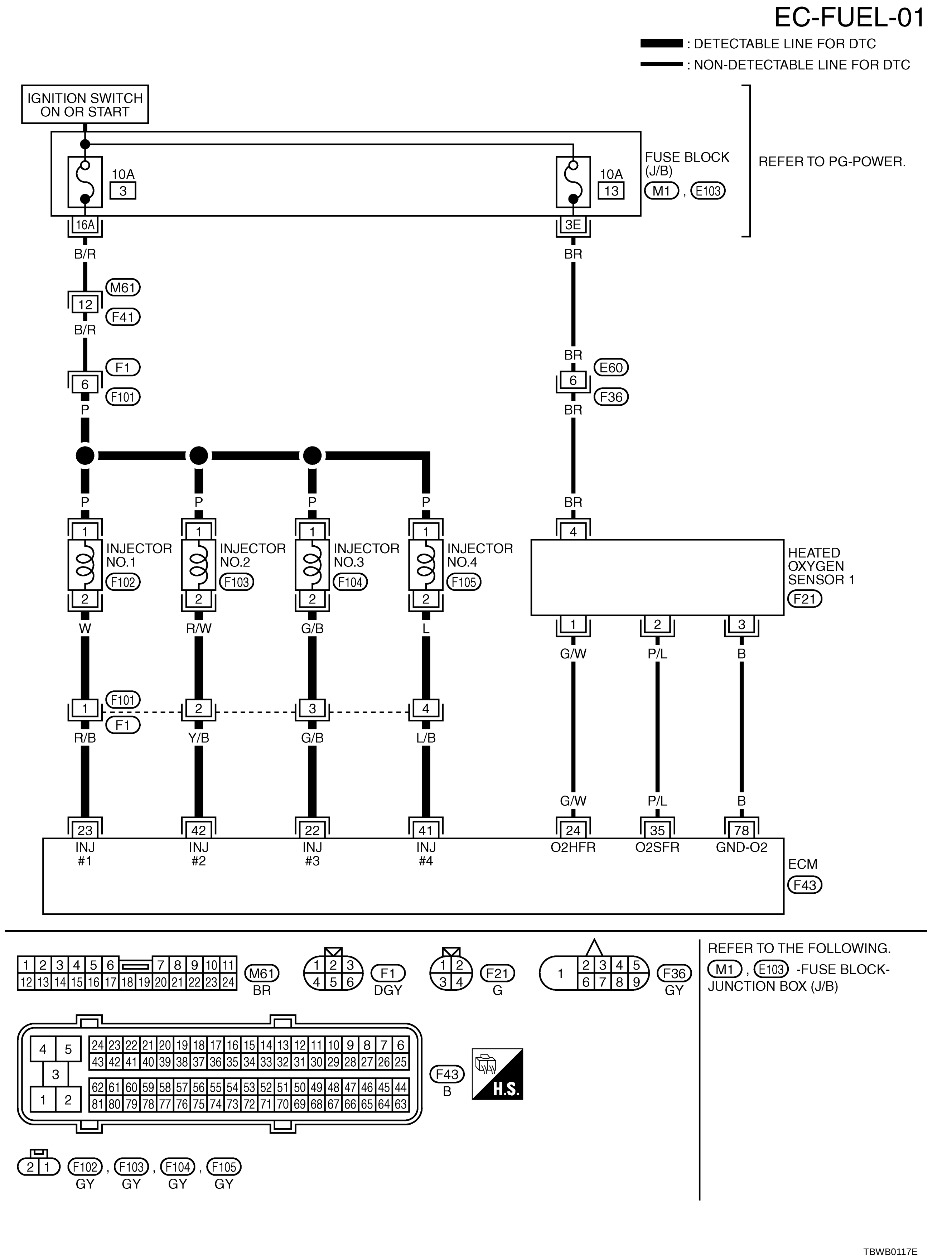

Diagnostic Procedure

ABS00D8D

1. CHECK EXHAUST GAS LEAK

1. Start engine and run it at idle.
2. Listen for an exhaust gas leak before three way catalyst (manifold).

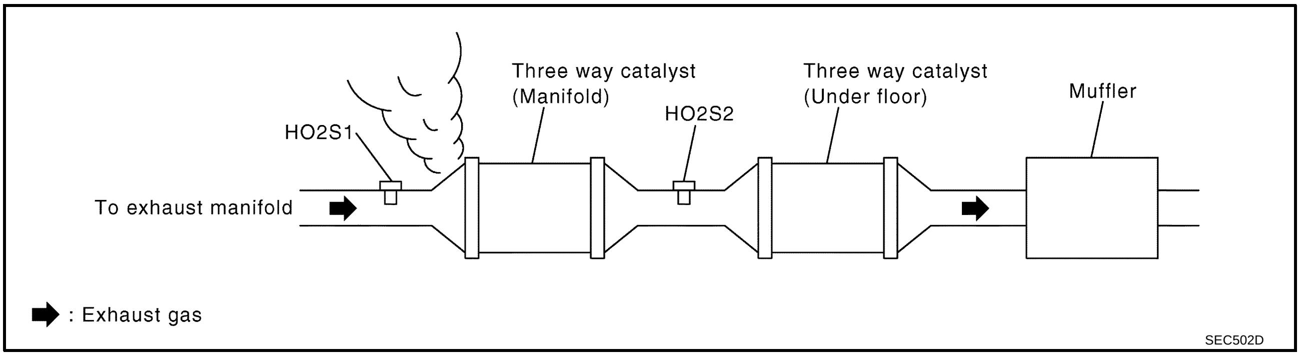

OK or NG

OK >> GO TO 2.
NG >> Repair or replace.

2. CHECK FOR INTAKE AIR LEAK

Listen for an intake air leak after the mass air flow sensor.

OK or NG

OK >> GO TO 3.
NG >> Repair or replace.

3. CHECK HEATED OXYGEN SENSOR 1 CIRCUIT FOR OPEN AND SHORT

1. Turn ignition switch OFF.
2. Disconnect heated oxygen sensor 1 (HO2S1) harness connector.
3. Disconnect ECM harness connector.
4. Check harness continuity between HO2S1 terminal 2 and ECM terminal 35.
   Refer to Wiring Diagram.

   Continuity should exist.

5. Check harness continuity between ECM terminal 35 or HO2S1 terminal 2 and ground.
   Refer to Wiring Diagram.

   Continuity should not exist.

6. Also check harness for short to power and short to ground.

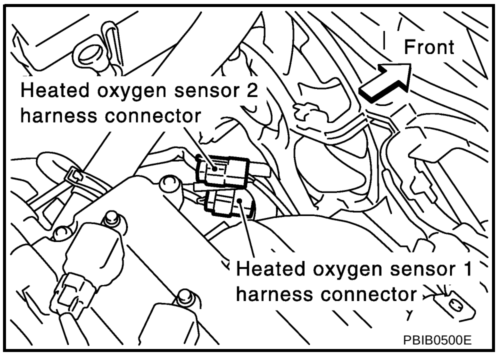

OK or NG

OK >> GO TO 4.
NG >> Repair open circuit or short to ground or short to power in harness or connectors.

4. CHECK FUEL PRESSURE

1. Release fuel pressure to zero. Refer to EC-90, "FUEL PRESSURE RELEASE" .
2. Install fuel pressure gauge and check fuel pressure. Refer to EC-91, "FUEL PRESSURE CHECK" .

   At idling: Approximately 350 kPa (3.5 bar, 3.57 kg/cm2, 51 psi)

OK or NG

OK >> GO TO 6.
NG >> GO TO 5.

5. DETECT MALFUNCTIONING PART

Check the following.

- Fuel pump and circuit (Refer to EC-613 .)
- Fuel pressure regulator (Refer to EC-90 .)
- Fuel lines (Refer to EM-30, "FUEL INJECTOR AND FUEL TUBE" .)
- Fuel filter for clogging

>> Repair or replace.

6. CHECK MASS AIR FLOW SENSOR

With CONSULT-II

1. Install all removed parts.
2. Check “MASS AIR FLOW” in “DATA MONITOR” mode with CONSULT-II.

1.0 - 4.0 g·m/sec: at idling
4.0 - 10 g·m/sec: at 2,500 rpm

With GST

1. Install all removed parts.
2. Check mass air flow sensor signal in Service $01 with GST.

1.0 - 4.0 g·m/sec: at idling
4.0 - 10 g·m/sec: at 2,500 rpm

OK or NG

OK >> GO TO 7.
NG >> Check connectors for rusted terminals or loose connections in the mass air flow sensor circuit or ground. Refer to EC-181 .

7. CHECK FUNCTION OF INJECTORS

With CONSULT-II

1. Start engine.
2. Perform “POWER BALANCE” in “ACTIVE TEST” mode with CONSULT-II.
3. Make sure that each circuit produces a momentary engine speed drop.

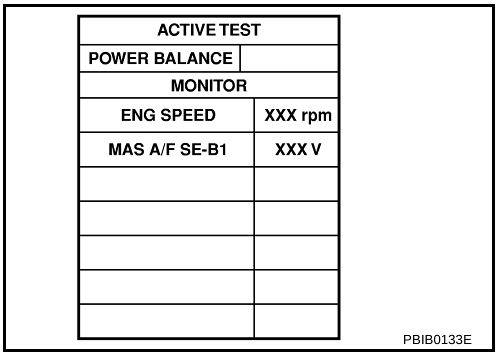

Without CONSULT-II

1. Start engine.
2. Listen to each injector operating sound.

Clicking noise should be heard.

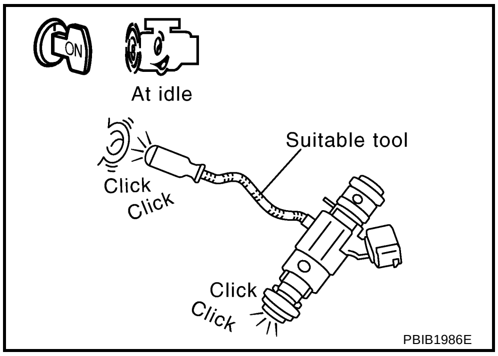

OK or NG

OK >> GO TO 8.
NG >> Perform trouble diagnosis for INJECTOR CIRCUIT, refer to EC-607, "INJECTOR CIRCUIT" .

8. CHECK INJECTOR

1. Remove injector assembly. Refer to EM-30, "FUEL INJECTOR AND FUEL TUBE" .
   Keep fuel hose and all injectors connected to injector gallery.
2. Confirm that the engine is cooled down and there are no fire hazards near the vehicle.
3. Disconnect injector harness connectors.
4. Disconnect all ignition coil harness connectors.
5. Prepare pans or saucers under each injectors.
6. Crank engine for about 3 seconds.
   Make sure fuel does not drip from injector.

OK or NG

OK (Does not drip.)>>GO TO 9.
NG (Drips.)>>Replace the injectors from which fuel is dripping. Always replace O-ring with new one.

9. CHECK INTERMITTENT INCIDENT

Refer to EC-153, "TROUBLE DIAGNOSIS FOR INTERMITTENT INCIDENT" .

>> **INSPECTION END**

DTC P0181 FTT SENSOR

PFP:22630

Component Description

ABS00COQ

The fuel tank temperature sensor is used to detect the fuel temperature inside the fuel tank. The sensor modifies a voltage signal from the ECM. The modified signal returns to the ECM as the fuel temperature input. The sensor uses a thermistor which is sensitive to the change in temperature. The electrical resistance of the thermistor decreases as temperature increases.

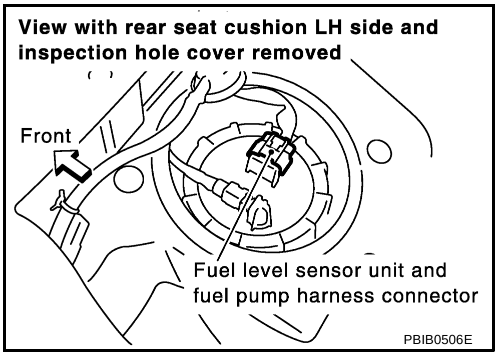

PBIB0506E

<Reference data>

Fluid temperature °C (°F)	Voltage* V	Resistance kΩ
20 (68)	3.5	2.3 - 2.7
50 (122)	2.2	0.79 - 0.90

*: This data is reference value and is measured between ECM terminal 107 (Fuel tank temperature sensor) and ground.

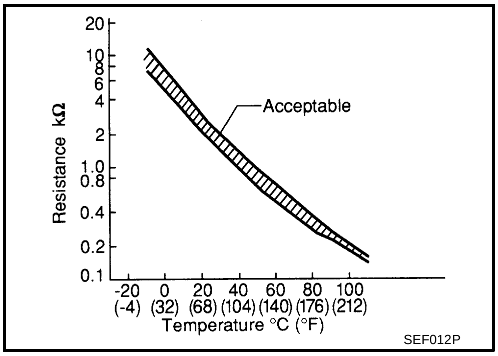

SEF012P

CAUTION:

Do not use ECM ground terminals when measuring input/output voltage. Doing so may damage the ECM's transistor. Use ground other than ECM, such as ground.

On Board Diagnosis Logic

ABS00COR

DTC No.	Trouble diagnosis name	DTC detecting condition	Possible cause
P0181 0181	Fuel tank temperature sensor circuit range/ performance	Rationally incorrect voltage from the sensor is sent to ECM, compared with the voltage signals from engine coolant temperature sensor and intake air temperature sensor.	● Harness or connectors (The sensor circuit is open or shorted) ● Fuel tank temperature sensor

DTC Confirmation Procedure

ABS00COS

NOTE:

If DTC Confirmation Procedure has been previously conducted, always turn ignition switch OFF and wait at least 10 seconds before conducting the next test.

WITH CONSULT-II

1. Turn ignition switch ON.
2. Select “DATA MONITOR” mode with CONSULT-II.
3. Wait at least 10 seconds.
   If the result is NG, go to EC-282, "Diagnostic Procedure" .
   If the result is OK, go to following step.
4. Check “COOLAN TEMP/S” value.
   If the “COOLAN TEMP/S” is less than 60°C (140°F), the result will be OK.
   If the “COOLAN TEMP/S” is above 60°C (140°F), go to the following step.
5. Cool engine down until “COOLAN TEMP/S” signal is less than 60°C (140°F).
6. Wait at least 10 seconds.
7. If 1st trip DTC is detected, go to EC-282, "Diagnostic Procedure" .

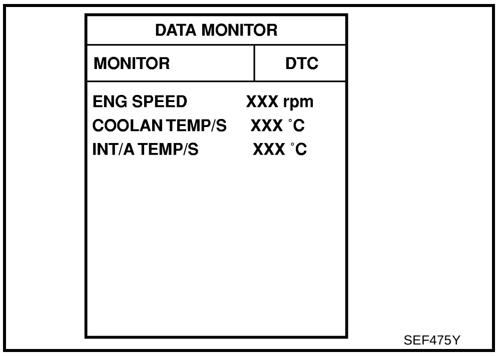

SEF475Y

WITH GST

Follow the procedure “WITH CONSULT-II” above.

Wiring Diagram

ABS00COT

EC-FTTS-01

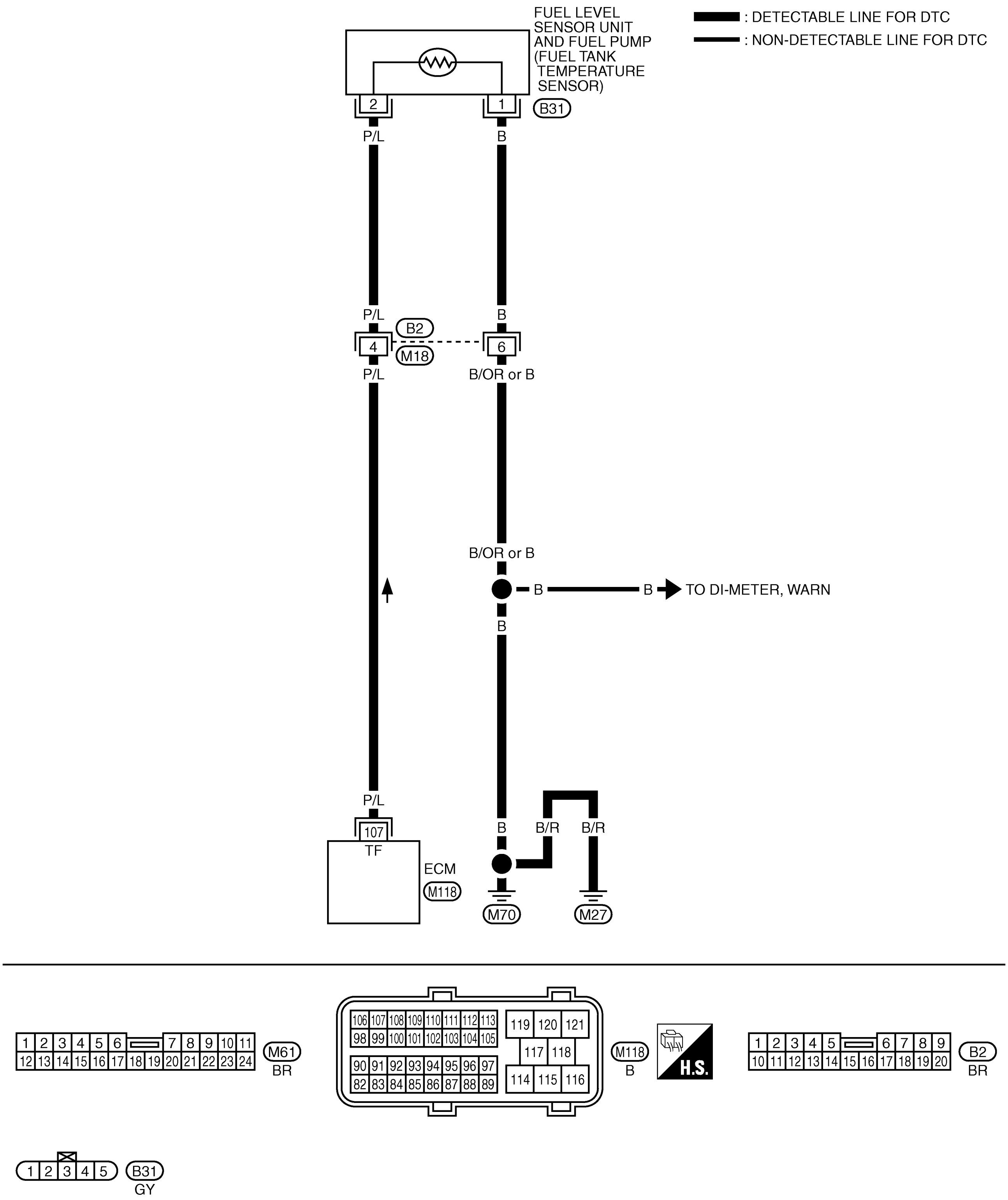

TBWB0118E

Diagnostic Procedure

ABS00COU

1. CHECK GROUND CONNECTIONS

1. Turn ignition switch OFF.
2. Loosen and retighten three ground screws on the body. Refer to EC-161, "Ground Inspection" .

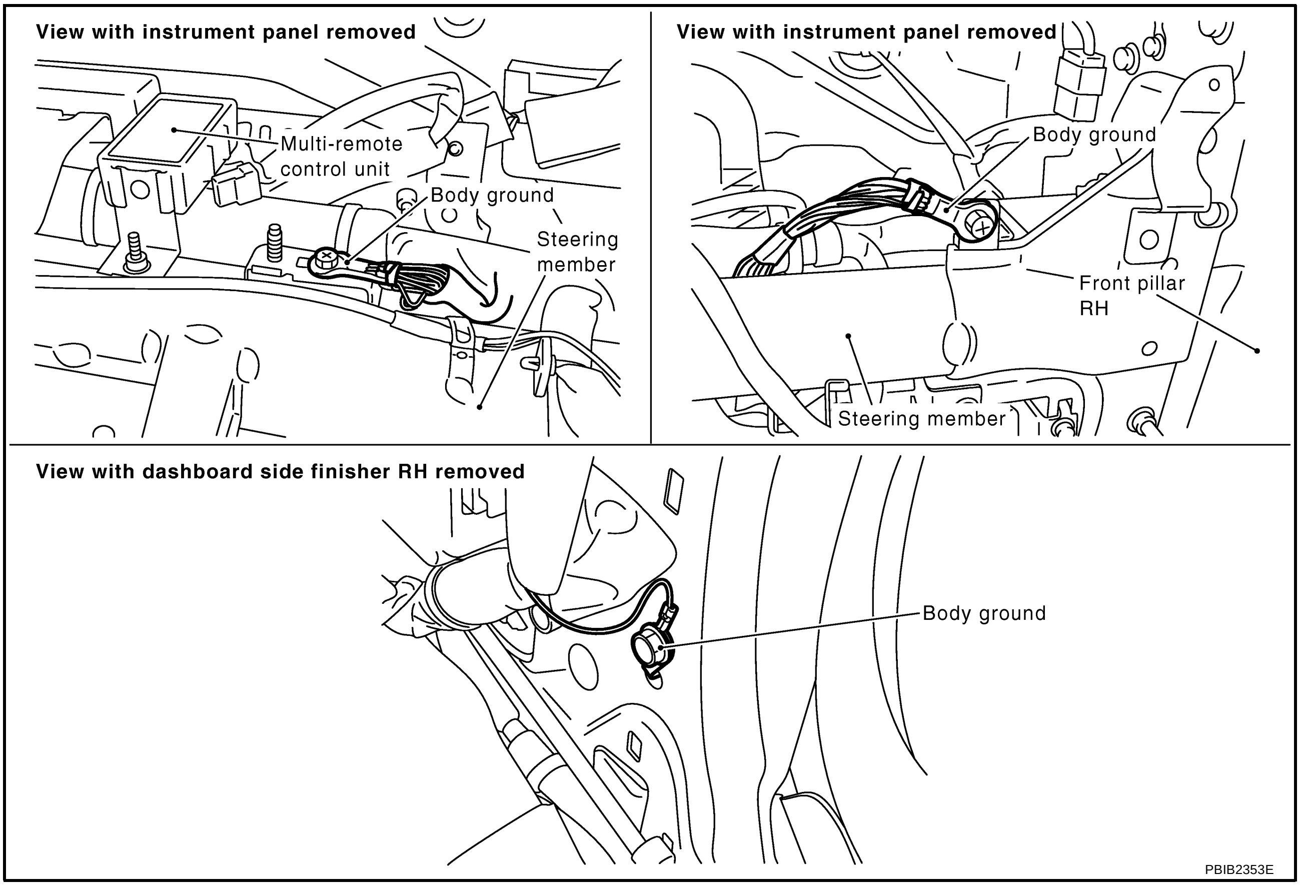

OK or NG

OK >> GO TO 2.
NG >> Repair or replace ground connections.

2. CHECK FUEL TANK TEMPERATURE SENSOR POWER SUPPLY CIRCUIT

1. Turn ignition switch OFF.
2. Disconnect “fuel level sensor unit and fuel pump” harness connector.
3. Turn ignition switch ON.

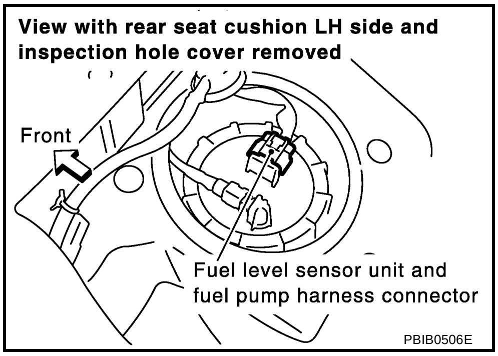

4. Check voltage between “fuel level sensor unit and fuel pump” terminal 2 and ground with CONSULT-II or tester.

Voltage: Approximately 5V

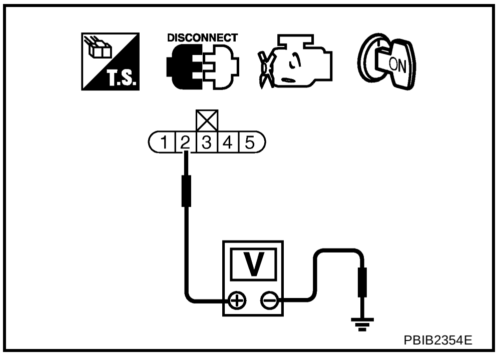

OK or NG

OK >> GO TO 4.
NG >> GO TO 3.

3. DETECT MALFUNCTIONING PART

Check the following.

- Harness connectors B2, M18
- Harness for open or short between ECM and “fuel level sensor unit and fuel pump”

>> Repair open circuit or short to ground or short to power in harness or connector.

4. CHECK FUEL TANK TEMPERATURE SENSOR GROUND CIRCUIT FOR OPEN AND SHORT

1. Turn ignition switch OFF.
2. Disconnect ECM harness connector.
3. Check harness continuity between “fuel level sensor unit and fuel pump” terminal 1 and ground. Refer to Wiring Diagram.

Continuity should exist.

4. Also check harness for short to power.

OK or NG

OK >> GO TO 6.
NG >> GO TO 5.

5. DETECT MALFUNCTIONING PART

Check the following.

- Harness connectors B2, M18
- Harness for open or short between “fuel level sensor unit and fuel pump” and ECM.

>> Repair open circuit or short to power in harness or connectors.

6. CHECK FUEL TANK TEMPERATURE SENSOR

Refer to, EC-284, "Component Inspection" .

OK or NG

OK >> GO TO 7.
NG >> Replace fuel level sensor unit.

7. CHECK INTERMITTENT INCIDENT

Perform EC-153, "TROUBLE DIAGNOSIS FOR INTERMITTENT INCIDENT" .

>> **INSPECTION END**

Component Inspection

ABS00COV

FUEL TANK TEMPERATURE SENSOR

Check resistance by heating with hot water or heat gun as shown in the figure.

Temperature °C (°F)	Resistance kΩ
20 (68)	2.3 - 2.7
50 (122)	0.79 - 0.90

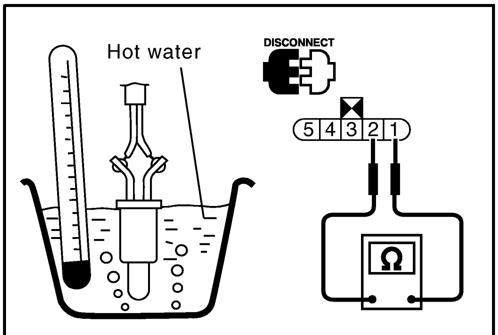

PBIB2355E

Removal and Installation

ABS00COW

FUEL TANK TEMPERATURE SENSOR

Refer to FL-4, "FUEL LEVEL SENSOR UNIT, FUEL FILTER AND FUEL PUMP ASSEMBLY" .

DTC P0182, P0183 FTT SENSOR

PFP:22630

Component Description

ABS00COX

The fuel tank temperature sensor is used to detect the fuel temperature inside the fuel tank. The sensor modifies a voltage signal from the ECM. The modified signal returns to the ECM as the fuel temperature input. The sensor uses a thermistor which is sensitive to the change in temperature. The electrical resistance of the thermistor decreases as temperature increases.

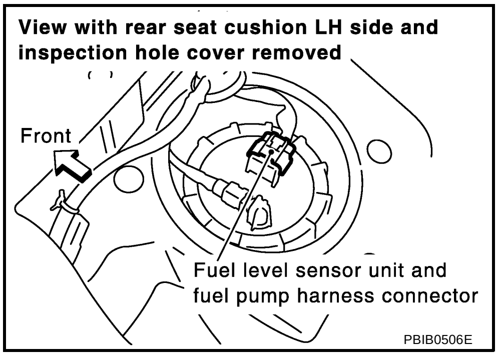

PBIB0506E

<Reference data>

Fluid temperature °C (°F)	Voltage* V	Resistance kΩ
20 (68)	3.5	2.3 - 2.7
50 (122)	2.2	0.79 - 0.90

*: This data is reference value and is measured between ECM terminal 107 (Fuel tank temperature sensor) and ground.

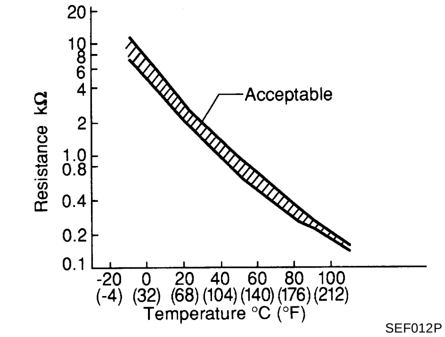

SEF012P

CAUTION:

Do not use ECM ground terminals when measuring input/output voltage. Doing so may damage the ECM's transistor. Use ground other than ECM, such as ground.

On Board Diagnosis Logic

ABS00COY

DTC No.	Trouble diagnosis name	DTC detecting condition	Possible cause
P0182 0182	Fuel tank temperature sensor circuit low input	An excessively low voltage from the sensor is sent to ECM.	• Harness or connectors (The sensor circuit is open or shorted.) • Fuel tank temperature sensor
P0183 0183	Fuel tank temperature sensor circuit high input	An excessively high voltage from the sensor is sent to ECM.	

DTC Confirmation Procedure

ABS00COZ

NOTE:

If DTC Confirmation Procedure has been previously conducted, always turn ignition switch OFF and wait at least 10 seconds before conducting the next test.

WITH CONSULT-II

1. Turn ignition switch ON.
2. Select “DATA MONITOR” mode with CONSULT-II.
3. Wait at least 5 seconds.
4. If 1st trip DTC is detected, go to EC-287, "Diagnostic Procedure" .

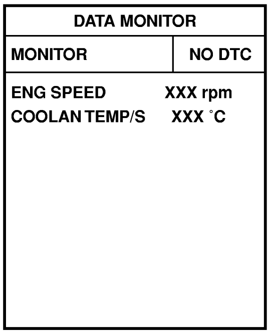

SEF174Y

WITH GST

Follow the procedure “WITH CONSULT-II” above.

Wiring Diagram

ABS00CP0

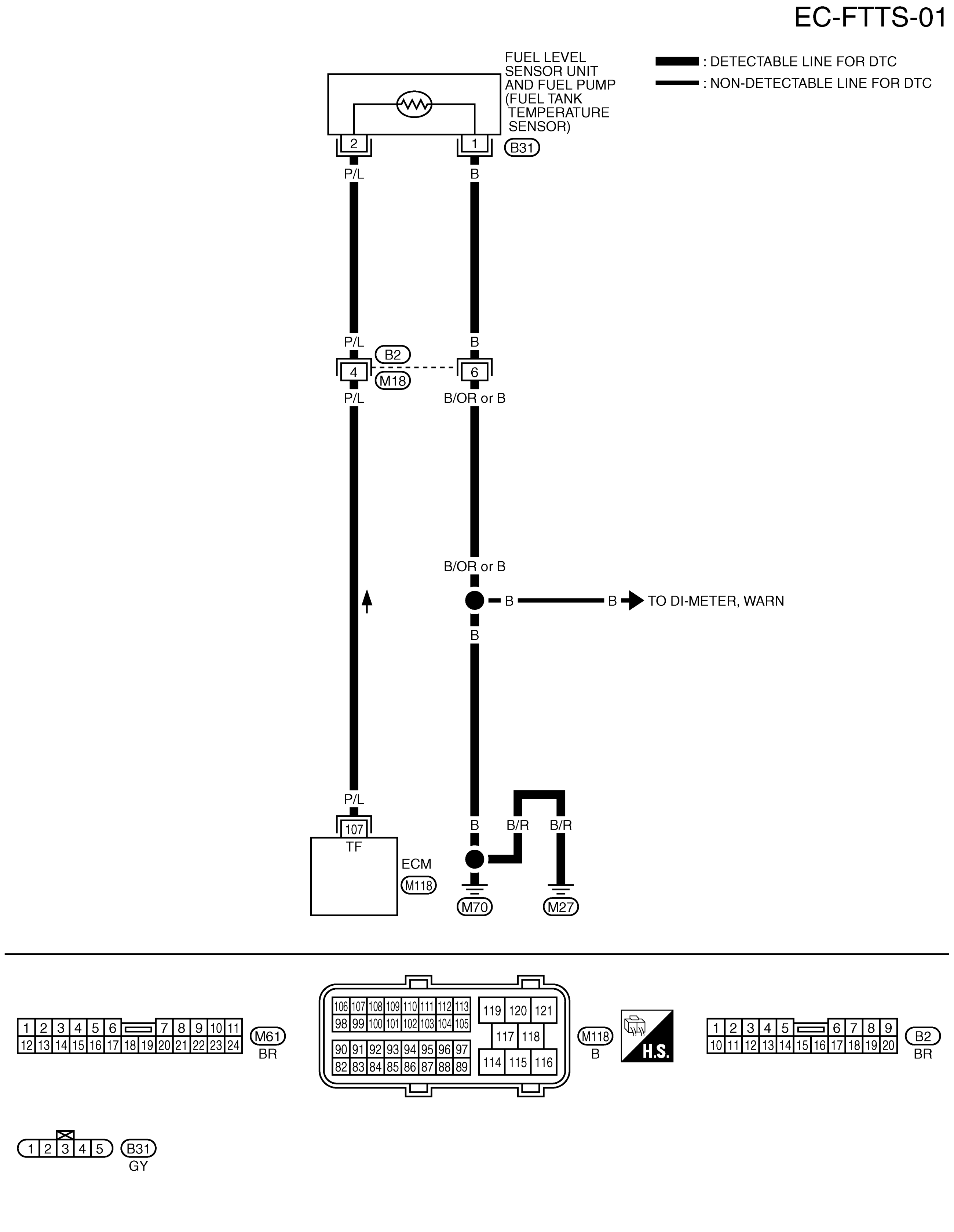

Diagnostic Procedure

ABS00CP1

1. CHECK GROUND CONNECTIONS

1. Turn ignition switch OFF.
2. Loosen and retighten three ground screws on the body. Refer to EC-161, "Ground Inspection" .

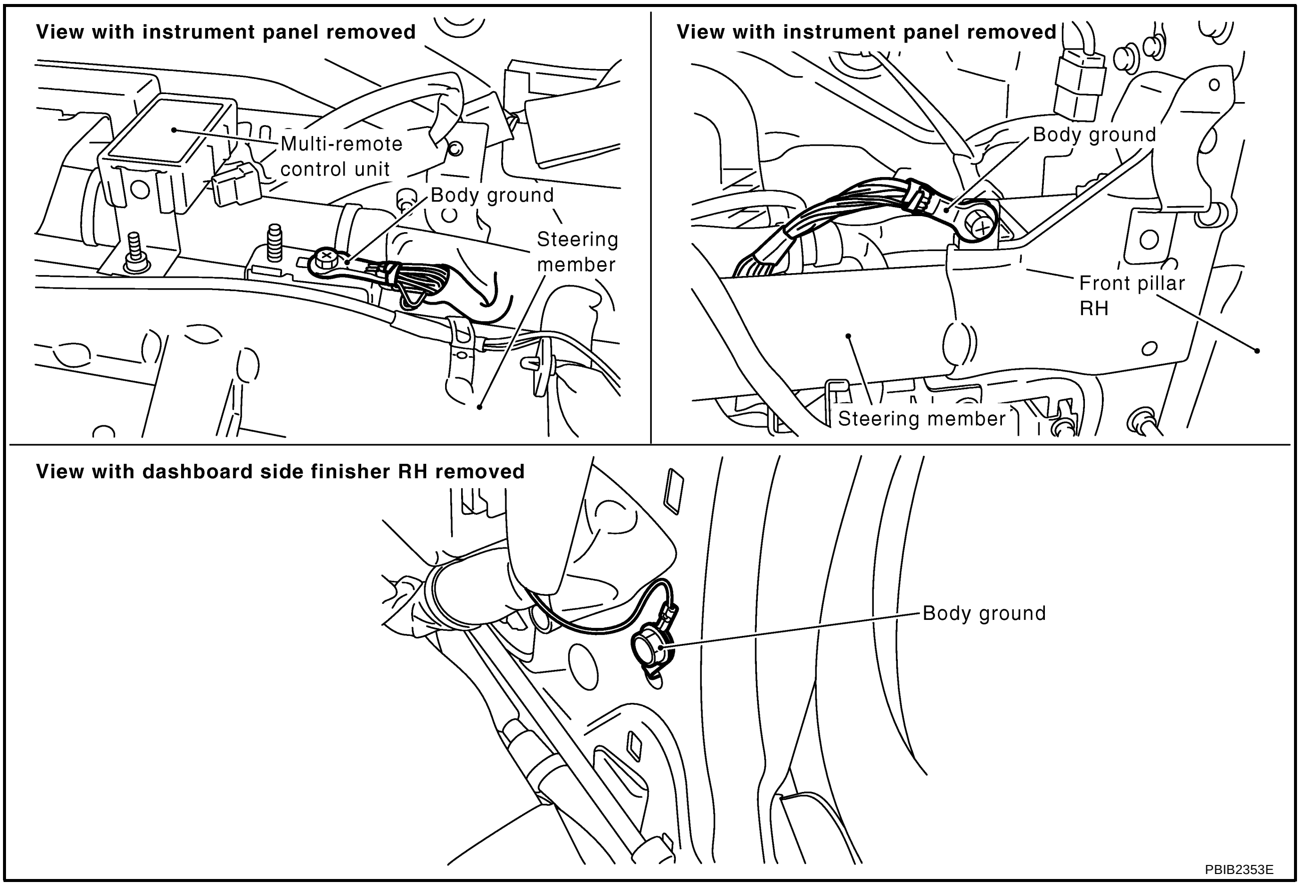

OK or NG

OK >> GO TO 2.
NG >> Repair or replace ground connections.

2. CHECK FUEL TANK TEMPERATURE SENSOR POWER SUPPLY CIRCUIT

1. Disconnect “fuel level sensor unit and fuel pump” harness connector.
2. Turn ignition switch ON.

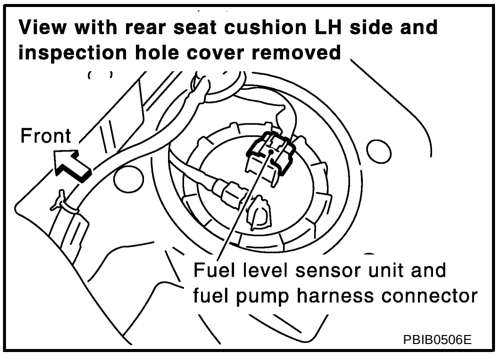

3. Check voltage between “fuel level sensor unit and fuel pump” terminal 2 and ground with CONSULT-II or tester.

Voltage: Approximately 5V

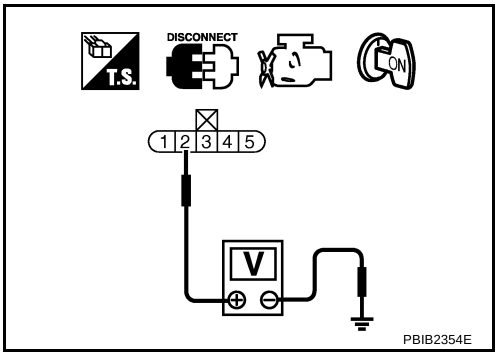

OK or NG

OK >> GO TO 4.
NG >> GO TO 3.

3. DETECT MALFUNCTIONING PART

Check the following.

- Harness connectors B2, M18
- Harness for open or short between ECM and “fuel level sensor unit and fuel pump”

>> Repair open circuit or short to ground or short to power in harness or connector.

4. CHECK FUEL TANK TEMPERATURE SENSOR GROUND CIRCUIT FOR OPEN AND SHORT

1. Turn ignition switch OFF.
2. Disconnect ECM harness connector.
3. Check harness continuity between “fuel level sensor unit and fuel pump” terminal 1 and ground. Refer to Wiring Diagram.

Continuity should exist.

4. Also check harness for short to power.

OK or NG

OK >> GO TO 6.
NG >> GO TO 5.

5. DETECT MALFUNCTIONING PART

Check the following.

- Harness connectors B2, M18
- Harness for open or short between “fuel level sensor unit and fuel pump” and ECM

>> Repair open circuit or short to power in harness or connector.

A
EC
C
D
E
F
G
H
I
J
K
L
M

6. CHECK FUEL TANK TEMPERATURE SENSOR

Refer to, EC-289, "Component Inspection" .

OK or NG

OK >> GO TO 7.
NG >> Replace "fuel level sensor unit and fuel pump".

7. CHECK INTERMITTENT INCIDENT

Perform EC-153, "TROUBLE DIAGNOSIS FOR INTERMITTENT INCIDENT" .

>> **INSPECTION END**

Component Inspection

ABS00CP2

FUEL TANK TEMPERATURE SENSOR

Check resistance by heating with hot water or heat gun as shown in the figure.

Temperature °C (°F)	Resistance kΩ
20 (68)	2.3 - 2.7
50 (122)	0.79 - 0.90

If NG, replace "fuel level sensor unit and fuel pump".

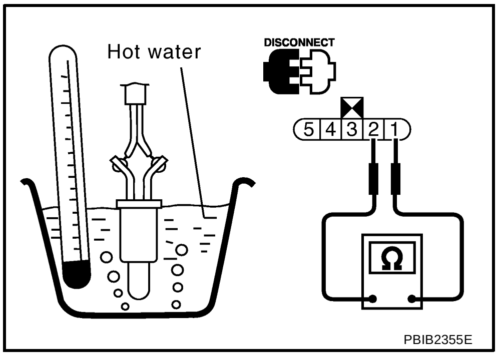

Removal and Installation

ABS00CP3

FUEL TANK TEMPERATURE SENSOR

Refer to FL-4, "FUEL LEVEL SENSOR UNIT, FUEL FILTER AND FUEL PUMP ASSEMBLY" .

DTC P0222, P0223 TP SENSOR

PFP:16119

Component Description

ABS00CP4

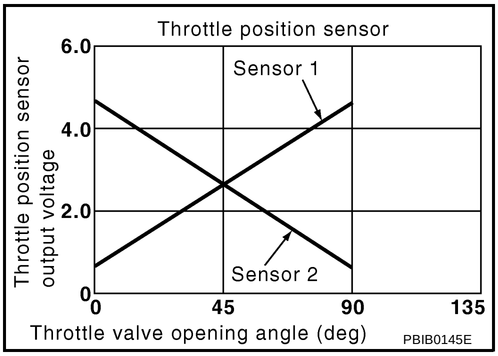

Electric throttle control actuator consists of throttle control motor, throttle position sensor, etc. The throttle position sensor responds to the throttle valve movement.

The throttle position sensor has the two sensors. These sensors are a kind of potentiometers which transform the throttle valve position into output voltage, and emit the voltage signal to the ECM. In addition, these sensors detect the opening and closing speed of the throttle valve and feed the voltage signals to the ECM. The ECM judges the current opening angle of the throttle valve from these signals and the ECM controls the throttle control motor to make the throttle valve opening angle properly in response to driving condition.

CONSULT-II Reference Value in Data Monitor Mode

ABS00CP5

Specification data are reference values.

MONITOR ITEM	CONDITION		SPECIFICATION
THRTL SEN 1 THRTL SEN 2*	● Ignition switch: ON (Engine stopped) ● Shift lever: D (A/T), 1ST (M/T)	Accelerator pedal: Fully released	More than 0.36V
		Accelerator pedal: Fully depressed	Less than 4.75V

*: Accelerator pedal position sensor 2 signal and throttle position sensor 2 signal are converted by ECM internally. Thus, they differ from ECM terminals voltage signal.

On Board Diagnosis Logic

ABS00CP6

These self-diagnoses have the one trip detection logic.

DTC No.	Trouble diagnosis name	DTC detecting condition	Possible cause
P0222 0222	Throttle position sensor 1 circuit low input	An excessively low voltage from the TP sensor 1 is sent to ECM.	● Harness or connectors (The TP sensor 1 circuit is open or shorted.) (The APP sensor 2 circuit is shorted.) ● Electric throttle control actuator (TP sensor 1) ● Accelerator pedal position sensor (APP sensor 2)
P0223 0223	Throttle position sensor 1 circuit high input	An excessively high voltage from the TP sensor 1 is sent to ECM.	

FAIL-SAFE MODE

When the malfunction is detected, the ECM enters fail-safe mode and the MIL lights up.

Engine operation condition in fail-safe mode
The ECM controls the electric throttle control actuator in regulating the throttle opening in order for the idle position to be within +10 degrees. The ECM regulates the opening speed of the throttle valve to be slower than the normal condition. So, the acceleration will be poor.

DTC Confirmation Procedure

ABS00CP7

NOTE:

If DTC Confirmation Procedure has been previously conducted, always turn ignition switch OFF and wait at least 10 seconds before conducting the next test.

TESTING CONDITION:

Before performing the following procedure, confirm that battery voltage is more than 10V at idle.

WITH CONSULT-II

1. Turn ignition switch ON.

2. Select “DATA MONITOR” mode with CONSULT-II.
3. Start engine and let it idle for 1 second.
4. If DTC is detected, go to EC-294, "Diagnostic Procedure" .

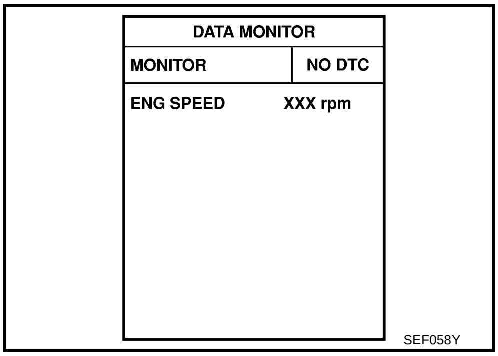

WITH GST

Follow the procedure “WITH CONSULT-II” above.

Wiring Diagram

ABS00CP8

EC-TPS1-01

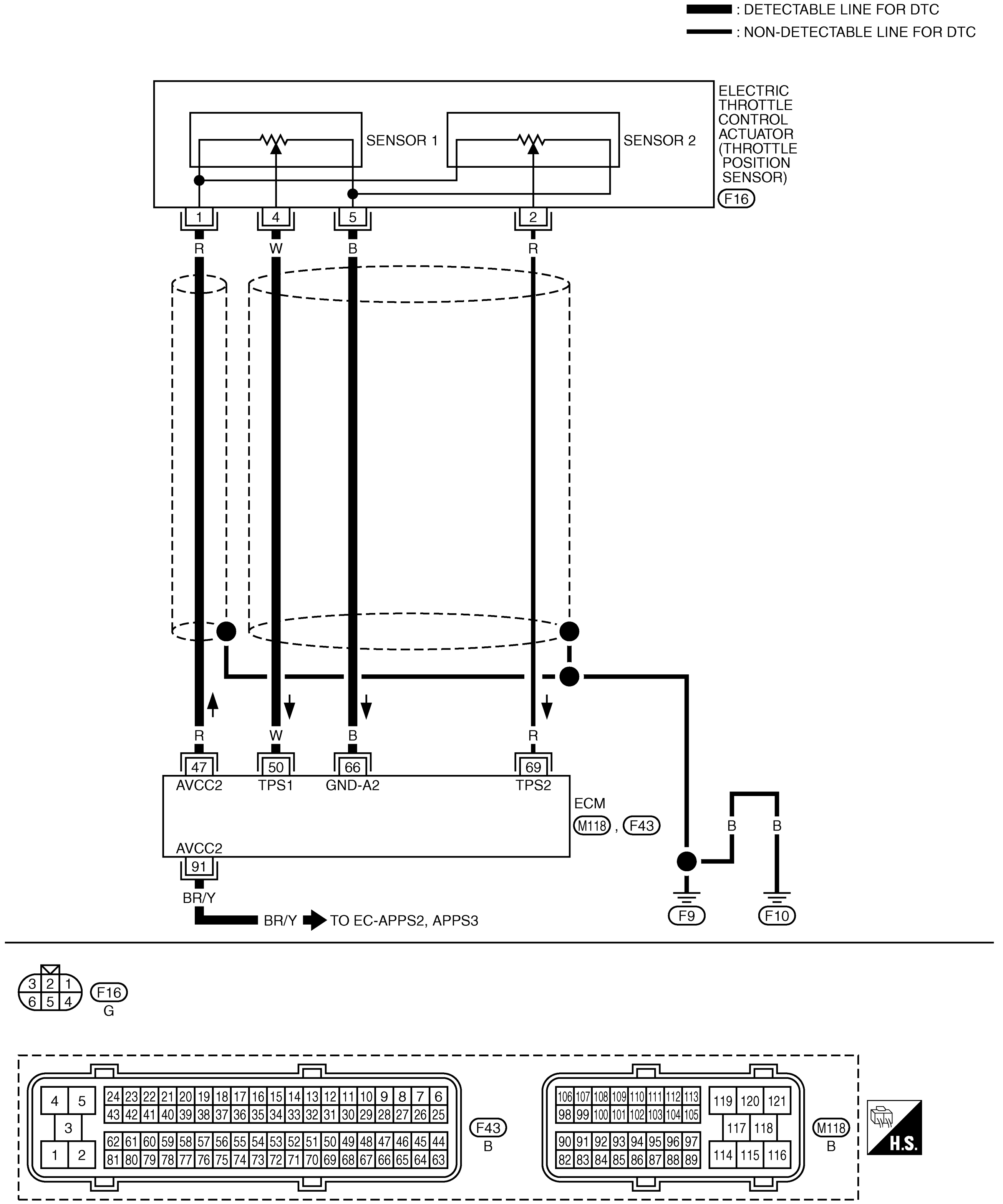

TBWB0119E

Specification data are reference values and are measured between each terminal and ground.

CAUTION:

Do not use ECM ground terminals when measuring input/output voltage. Doing so may result in damage to the ECM's transistor. Use a ground other than ECM terminals, such as the ground.

TERMINAL NO.	WIRE COLOR	ITEM	CONDITION	DATA (DC Voltage)
47	R	Sensor power supply (Throttle position sensor)	**[Ignition switch: ON]**	Approximately 5V
50	W	Throttle position sensor 1	**[Ignition switch: ON]** ● Engine stopped ● Shift lever: D (A/T), 1ST (M/T) ● Accelerator pedal: Fully released	More than 0.36V
			[Ignition switch: ON] ● Engine stopped ● Shift lever: D (A/T), 1ST (M/T) ● Accelerator pedal: Fully depressed	Less than 4.75V
66	B	Sensor ground (Throttle position sensor)	**[Engine is running]** ● **Warm-up condition** ● Idle speed	Approximately 0V
69	R	Throttle position sensor 2	**[Ignition switch: ON]** ● Engine stopped ● Shift lever: D (A/T), 1ST (M/T) ● Accelerator pedal: Fully released	Less than 4.75V
			[Ignition switch: ON] ● Engine stopped ● Shift lever: D (A/T), 1ST (M/T) ● Accelerator pedal: Fully depressed	More than 0.36V
91	BR/Y	Sensor power supply (Accelerator pedal position sensor 2)	**[Ignition switch: ON]**	Approximately 5V

Diagnostic Procedure

ABS00CP9

1. CHECK GROUND CONNECTIONS

1. Turn ignition switch OFF.
2. Loosen and retighten three ground screws on the body. Refer to EC-161, "Ground Inspection" .

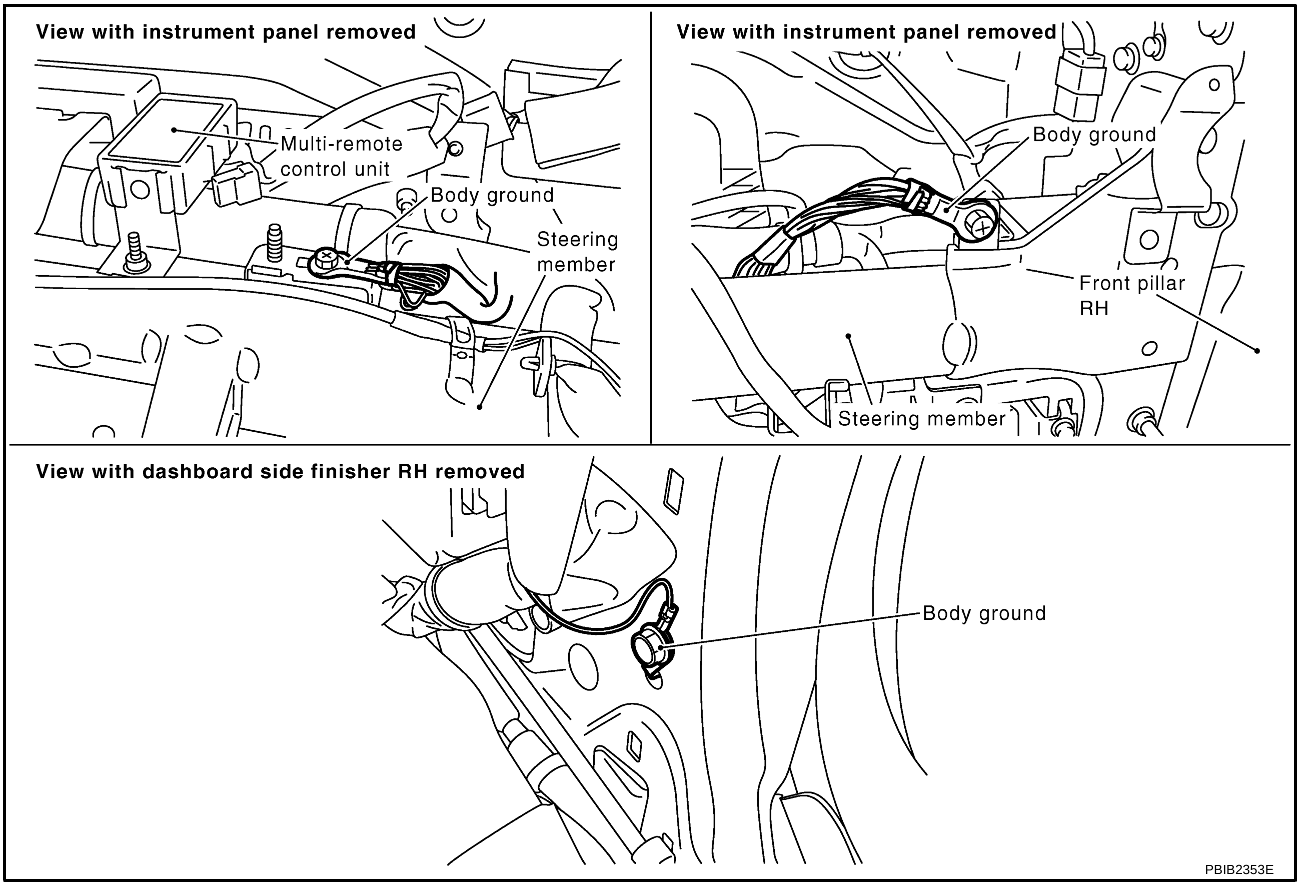

OK or NG

OK >> GO TO 2.
NG >> Repair or replace ground connections.

2. CHECK THROTTLE POSITION SENSOR 1 POWER SUPPLY CIRCUIT-I

1. Disconnect electric throttle control actuator harness connector.
2. Turn ignition switch ON.

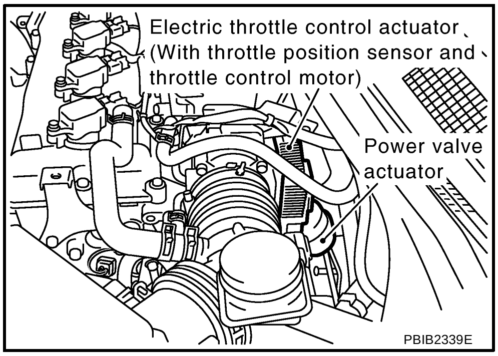

3. Check voltage between electric throttle control actuator terminal 1 and ground with CONSULT-II or tester.

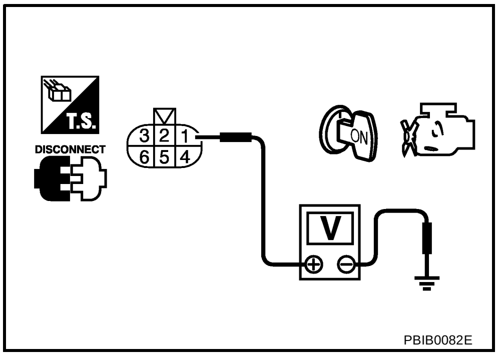

Voltage: Approximately 5V

OK or NG

OK >> GO TO 7.
NG >> GO TO 3.

3. CHECK THROTTLE POSITION SENSOR 1 POWER SUPPLY CIRCUIT-II

1. Turn ignition switch OFF.
2. Disconnect ECM harness connector.
3. Check harness continuity between electric throttle control actuator terminal 1 and ECM terminal 47. Refer to Wiring Diagram.

Continuity should exist.

OK or NG

OK >> GO TO 4.
NG >> Repair open circuit or short to ground or short to power in harness or connectors.

4. CHECK THROTTLE POSITION SENSOR 1 POWER SUPPLY CIRCUIT-III

Check the following.

- Harness for short to power and short to ground, between the following terminals.

ECM terminal	Sensor terminal	Reference Wiring Diagram
47	Electric throttle control actuator terminal 1	EC-212
91	APP sensor terminal 4	EC-564

OK or NG

OK >> GO TO 5.
NG >> Repair short to ground or short to power in harness or connectors.

5. CHECK APP SENSOR

Refer to EC-569, "Component Inspection" .

OK or NG

OK >> GO TO 11.
NG >> GO TO 6.

6. REPLACE ACCELERATOR PEDAL ASSEMBLY

1. Replace accelerator pedal assembly.
2. Perform EC-88, "Accelerator Pedal Released Position Learning" .
3. Perform EC-88, "Throttle Valve Closed Position Learning" .
4. Perform EC-88, "Idle Air Volume Learning" .

>> **INSPECTION END**

7. CHECK THROTTLE POSITION SENSOR 1 GROUND CIRCUIT FOR OPEN AND SHORT

1. Turn ignition switch OFF.
2. Disconnect ECM harness connector.
3. Check harness continuity between ECM terminal 66 and electric throttle control actuator terminal 5. Refer to Wiring Diagram.

Continuity should exist.

4. Also check harness for short to ground or short to power.

OK or NG

OK >> GO TO 8.
NG >> Repair open circuit or short to ground or short to power in harness or connectors.

8. CHECK THROTTLE POSITION SENSOR 1 INPUT SIGNAL CIRCUIT FOR OPEN AND SHORT

1. Check harness continuity between ECM terminal 50 and electric throttle control actuator terminal 4. Refer to Wiring Diagram.

Continuity should exist.

2. Also check harness for short to ground and short to power.

OK or NG

OK >> GO TO 9.
NG >> Repair open circuit or short to ground or short to power in harness or connectors.

9. CHECK THROTTLE POSITION SENSOR

Refer to EC-297, "Component Inspection" .

OK or NG

OK >> GO TO 11.
NG >> GO TO 10.

10. REPLACE ELECTRIC THROTTLE CONTROL ACTUATOR

1. Replace the electric throttle control actuator.
2. Perform EC-88, "Throttle Valve Closed Position Learning" .
3. Perform EC-88, "Idle Air Volume Learning" .

>> **INSPECTION END**

11. CHECK INTERMITTENT INCIDENT

Refer to EC-153, "TROUBLE DIAGNOSIS FOR INTERMITTENT INCIDENT" .

>> **INSPECTION END**

Component Inspection

ABS00CPA

THROTTLE POSITION SENSOR

1. Reconnect all harness connectors disconnected.
2. Perform EC-88, "Throttle Valve Closed Position Learning" .
3. Turn ignition switch ON.
4. Set shift lever to D (A/T) or 1st (M/T) position.
5. Check voltage between ECM terminals 50 (TP sensor 1 signal), 69 (TP sensor 2 signal) and ground under the following conditions.

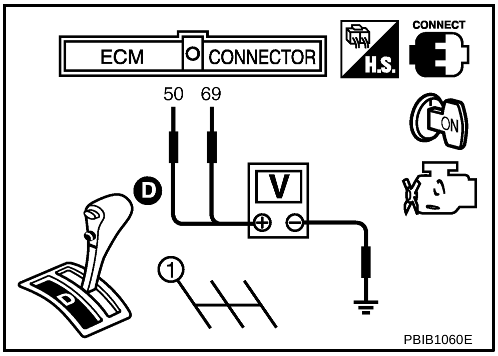

PBIB1060E

Terminal	Accelerator pedal	Voltage
50 (Throttle position sensor 1)	Fully released	More than 0.36V
	Fully depressed	Less than 4.75V
69 (Throttle position sensor 2)	Fully released	Less than 4.75V
	Fully depressed	More than 0.36V

6. If NG, replace electric throttle control actuator and go to the next step.
7. Perform EC-88, "Throttle Valve Closed Position Learning" .
8. Perform EC-88, "Idle Air Volume Learning" .

Remove and Installation

ABS00CPB

ELECTRIC THROTTLE CONTROL ACTUATOR

Refer to EM-16, "INTAKE MANIFOLD" .

DTC P0300 - P0304 MULTIPLE CYLINDER MISFIRE, NO. 1 - 4 CYLINDER MISFIRE

PFP:00000

On Board Diagnosis Logic

ABS00CPC

When a misfire occurs, engine speed will fluctuate. If the engine speed fluctuates enough to cause the crankshaft position (CKP) sensor (POS) signal to vary, ECM can determine that a misfire is occurring.

Sensor	Input Signal to ECM	ECM function
Crankshaft position sensor (POS)	Engine speed	On board diagnosis of misfire

The misfire detection logic consists of the following two conditions.

1. One Trip Detection Logic (Three way catalyst damage)
   On the 1st trip that a misfire condition occurs that can damage the three way catalyst (TWC) due to overheating, the MIL will blink.
   When a misfire condition occurs, the ECM monitors the CKP sensor (POS) signal every 200 engine revolutions for a change.
   When the misfire condition decreases to a level that will not damage the TWC, the MIL will turn off.
   If another misfire condition occurs that can damage the TWC on a second trip, the MIL will blink.
   When the misfire condition decreases to a level that will not damage the TWC, the MIL will remain on.
   If another misfire condition occurs that can damage the TWC, the MIL will begin to blink again.
2. Two Trip Detection Logic (Exhaust quality deterioration)
   For misfire conditions that will not damage the TWC (but will affect vehicle emissions), the MIL will only light when the misfire is detected on a 2nd trip. During this condition, the ECM monitors the CKP sensor signal every 1,000 engine revolutions.
   A misfire malfunction can be detected on any one cylinder or on multiple cylinders.

DTC No.	Trouble diagnosis name	DTC detecting condition	Possible cause
P0300 0300	Multiple cylinder misfire detected	Multiple cylinder misfire.	• Improper spark plug • Insufficient compression • Incorrect fuel pressure • The injector circuit is open or shorted • Fuel injector • Intake air leak • The ignition signal circuit is open or shorted • Lack of fuel • Drive plate or flywheel • Heated oxygen sensor 1 • Incorrect PCV hose connection
P0301 0301	No.1 cylinder misfire detected	No. 1 cylinder misfires.	
P0302 0302	No. 2 cylinder misfire detected	No. 2 cylinder misfires.	
P0303 0303	No. 3 cylinder misfire detected	No. 3 cylinder misfires.	
P0304 0304	No. 4 cylinder misfire detected	No. 4 cylinder misfires.	

DTC Confirmation Procedure

ABS00CPD

CAUTION:

Always drive vehicle in safe manner according to traffic conditions and obey all traffic laws when driving.

NOTE:

If DTC Confirmation Procedure has been previously conducted, always turn ignition switch OFF and wait at least 10 seconds before conducting the next test.

WITH CONSULT-II

1. Turn ignition switch ON, and select “DATA MONITOR” mode with CONSULT-II.
2. Start engine and warm it up to normal operating temperature.
3. Turn ignition switch OFF and wait at least 10 seconds.
4. Restart engine and let it idle for about 15 minutes.
5. If 1st trip DTC is detected, go to EC-299, "Diagnostic Procedure".

   NOTE:
   If 1st trip DTC is not detected during above procedure, performing the following procedure is advised.

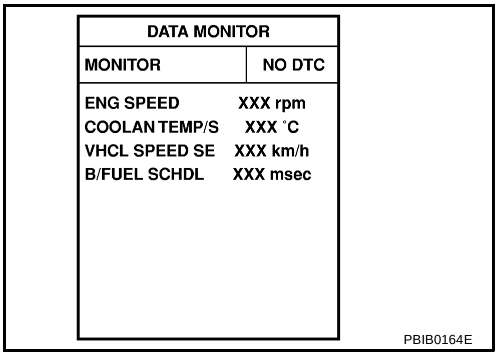

a. Turn ignition switch OFF and wait at least 10 seconds.
b. Start engine and drive the vehicle under the similar conditions to (1st trip) Freeze Frame Data for a certain time. Refer to the table below.
   Hold the accelerator pedal as steady as possible.

   The similar conditions to (1st trip) Freeze Frame Data means the vehicle operation that the following conditions should be satisfied at the same time.

Engine speed	Engine speed in the freeze frame data ± 400 rpm
Vehicle speed	Vehicle speed in the feaze frame data ± 10 km/h (6 MPH)
Engine coolant temperature (T) condition	When the freeze frame data shows lower than 70 °C (158 °F), T should be lower than 70 °C (158 °F).
	When the freeze frame data shows higher than or equal to 70 °C (158 °F), T should be higher than or equal to 70 °C (158 °F).

The time to driving varies according to the engine speed in the freeze frame data.

Engine speed	Time
Around 1,000 rpm	Approximately 10 minutes
Around 2,000 rpm	Approximately 5 minutes
More than 3,000 rpm	Approximately 3.5 minutes

WITH GST

Follow the procedure “WITH CONSULT-II” above.

Diagnostic Procedure

ABS00CPE

1. CHECK FOR INTAKE AIR LEAK AND PCV HOSE

1. Start engine and run it at idle speed.
2. Listen for the sound of the intake air leak.
3. Check PCV hose connection.

OK or NG

OK >> GO TO 2.
NG >> Discover air leak location and repair.

2. CHECK FOR EXHAUST SYSTEM CLOGGING

Stop engine and visually check exhaust tube, three way catalyst and muffler for dents.

OK or NG

OK >> GO TO 3.
NG >> Repair or replace it.

3. PERFORM POWER BALANCE TEST

With CONSULT-II

1. Perform “POWER BALANCE” in “ACTIVE TEST” mode.
2. Is there any cylinder which does not produce a momentary engine speed drop?

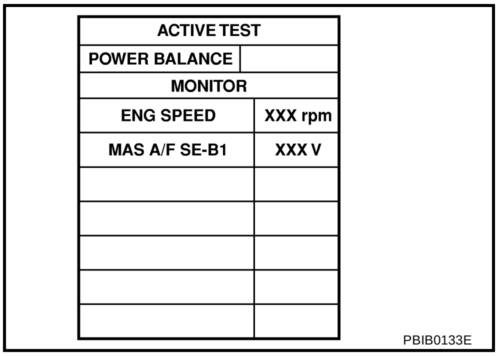

PBIB0133E

Without CONSULT-II

When disconnecting each injector harness connector one at a time, is there any cylinder which does not produce a momentary engine speed drop?

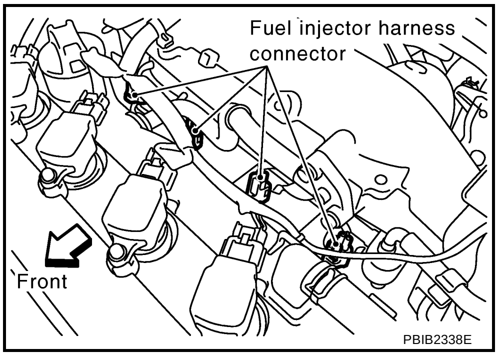

PBIB2338E

Yes or No

Yes >> GO TO 4.
No >> GO TO 9.

4. CHECK INJECTOR

Does each injector make an operating sound at idle?

Yes or No

Yes >> GO TO 5.
No >> Check injector(s) and circuit(s). Refer to EC-607 .

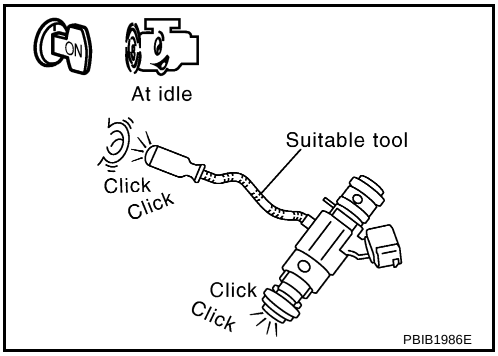

PBIB1986E

A
EC
C
D
E
F
G
H
I
J
K
L
M

5. CHECK FUNCTION OF IGNITION COIL-I

CAUTION:
Do the following procedure in the place where ventilation is good without the combustible.

1. Turn ignition switch OFF.
2. Remove fuel pump fuse located in fuse box to release fuel pressure.

   NOTE:
   Do not use CONSULT-II to release fuel pressure, or fuel pressure applies again during the following procedure.

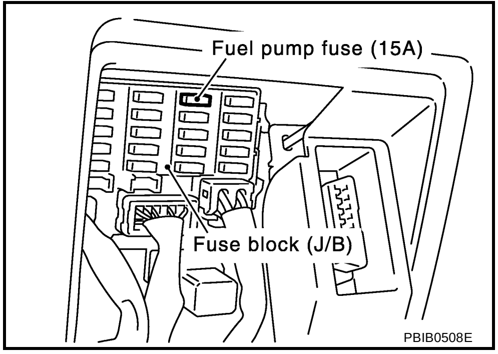

3. Start engine.
4. After engine stalls, crank it 2 or 3 times to release all fuel pressure.
5. Turn ignition switch OFF.
6. Remove all ignition coil harness connectors to avoid the electrical discharge from the ignition coils.
7. Remove ignition coil and spark plug of the cylinder to be checked.
8. Crank engine for 5 seconds or more to remove combustion gas in the cylinder.
9. Connect spark plug and harness connector to ignition coil.
10. Fix ignition coil using a rope etc. with gap of 13 - 17 mm between the edge of the spark plug and grounded metal portion as shown in the figure.

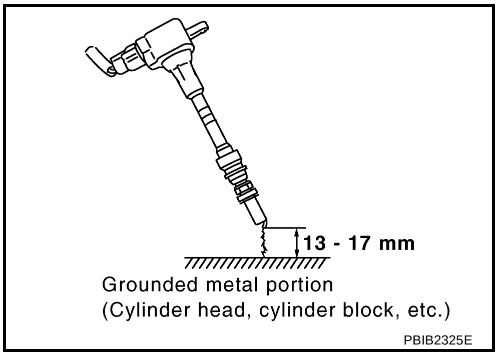

11. Crank engine for about three seconds, and check whether spark is generated between the spark plug and the grounded metal portion.

    Spark should be generated.

    CAUTION:
    - **Do not approach to the spark plug and the ignition coil within 50cm. Be careful not to get an electrical shock while checking, because the electrical discharge voltage becomes 20kV or more.**
    - **It might cause to damage the ignition coil if the gap of 17 mm or more is taken.**

    NOTE:
    When the gap is 13 mm or less, the spark might be generated even if the coil is malfunctioning.

OK or NG

OK >> GO TO 9.
NG >> GO TO 6.

6. CHECK FUNCTION OF IGNITION COIL-II

1. Turn ignition switch OFF.
2. Disconnect spark plug and connect a known-good spark plug.
3. Crank engine for about 3 seconds, and recheck whether spark is generated between the spark plug and the grounded metal portion.

   Spark should be generated.

OK or NG

OK >> GO TO 7.
NG >> Check ignition coil, power transistor and their circuits. Refer to EC-586 .

7. CHECK SPARK PLUG

Check the spark plugs and check for fouling, etc.

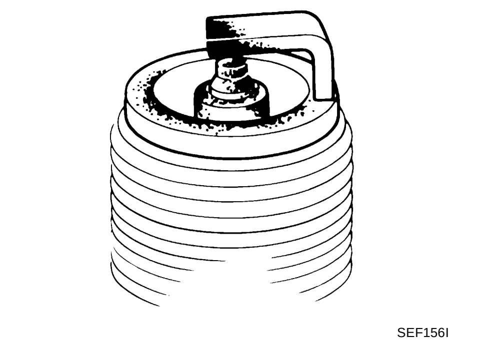

OK or NG

OK >> GO TO 8.
NG >> Repair or replace spark plug (s) with standard type one (s). For spark plug type ignition coil. Refer to MA-18, "Changing Spark Plugs (Platinum-Tipped Type)" .

8. CHECK FUNCTION OF IGNITION COIL-III

1. Reconnect the initial spark plugs.
2. Crank engine for about 3 seconds, and recheck whether spark is generated between the spark plug and the grounded portion.

Spark should be generated.

OK or NG

OK >> **INSPECTION END**
NG >> Replace spark plug(s) with standard type one(s). For spark plug type, refer to MA-18, "Changing Spark Plugs (Platinum-Tipped Type)" .

9. CHECK COMPRESSION PRESSURE

Check compression pressure.
Refer to EM-62, "CHECKING COMPRESSION PRESSURE" .

Standard:	**1,250 kPa (12,8 kg/cm^2 , 181 psi)/300 rpm**
Minimum:	**1,060 kPa (10,8 kg/cm^2 , 154 psi)/300 rpm**
Difference between each cylinder:	**98 kPa (1.0 kg/cm^2 , 14 psi)/300 rpm**

OK or NG

OK >> GO TO 10.
NG >> Check pistons, piston rings, valves, valve seats and cylinder head gaskets.

10. CHECK FUEL PRESSURE

1. Install all removed parts.
2. Release fuel pressure to zero. Refer to EC-90, "FUEL PRESSURE RELEASE" .
3. Install fuel pressure gauge and check fuel pressure.

At idle: Approximately. 350 kPa (3.57 kg/cm^2 , 51 psi)

OK or NG

OK >> GO TO 12.
NG >> GO TO 11.

11. DETECT MALFUNCTIONING PART

Check the following.

- Fuel pump and circuit (Refer to EC-613 .)
- Fuel pressure regulator (Refer to EC-90 .)
- Fuel lines (Refer to EM-30, "FUEL INJECTOR AND FUEL TUBE" .)
- Fuel filter for clogging

>> Repair or replace.

12. CHECK IGNITION TIMING

Checking the following items. Refer to EC-70, "Basic Inspection" .

Items	Specifications	
Target idle speed	M/T	700 ± 50 rpm (in Neutral position)
	A/T	700 ± 50 rpm (in P or N position)
Ignition timing	M/T	15 ± 5° BTDC (in Neutral position)
	A/T	15 ± 5° BTDC (in P or N position)

OK or NG

OK >> GO TO 13.
NG >> Follow the EC-70, "Basic Inspection" .

13. CHECK HEATED OXYGEN SENSOR 1

Refer to EC-231, "Component Inspection" .

OK or NG

OK >> GO TO 14.
NG >> Replace heated oxygen sensor 1.

14. CHECK MASS AIR FLOW SENSOR

With CONSULT-II

Check “MASS AIR FLOW” in “DATA MONITOR” mode with CONSULT-II.

1.0 - 4.0 g·m/sec: at idling
4.0 - 10.0 g·m/sec: at 2,500 rpm

With GST

Check mass air flow sensor signal in Service $01 with GST.

1.0 - 4.0 g·m/sec: at idling
4.0 - 10.0 g·m/sec: at 2,500 rpm

OK or NG

OK >> GO TO 15.
NG >> Check connectors for rusted terminals or loose connections in the mass air flow sensor circuit or ground. Refer to EC-181 .

15. CHECK SYMPTOM MATRIX CHART

Check items on the rough idle symptom in EC-103, "Symptom Matrix Chart" .

OK or NG

OK >> GO TO 16.
NG >> Repair or replace.

16. ERASE THE 1ST TRIP DTC

Some tests may cause a 1st trip DTC to be set.
Erase the 1st trip DTC from the ECM memory after performing the tests. Refer to EC-59, "HOW TO ERASE EMISSION-RELATED DIAGNOSTIC INFORMATION" .

>> GO TO 17.

17. CHECK INTERMITTENT INCIDENT

Perform EC-153, "TROUBLE DIAGNOSIS FOR INTERMITTENT INCIDENT" .

>> **INSPECTION END**

DTC P0327, P0328 KS

PFP:22060

Component Description

ABS00CPF

The knock sensor is attached to the cylinder block. It senses engine knocking using a piezoelectric element. A knocking vibration from the cylinder block is sensed as vibrational pressure. This pressure is converted into a voltage signal and sent to the ECM.

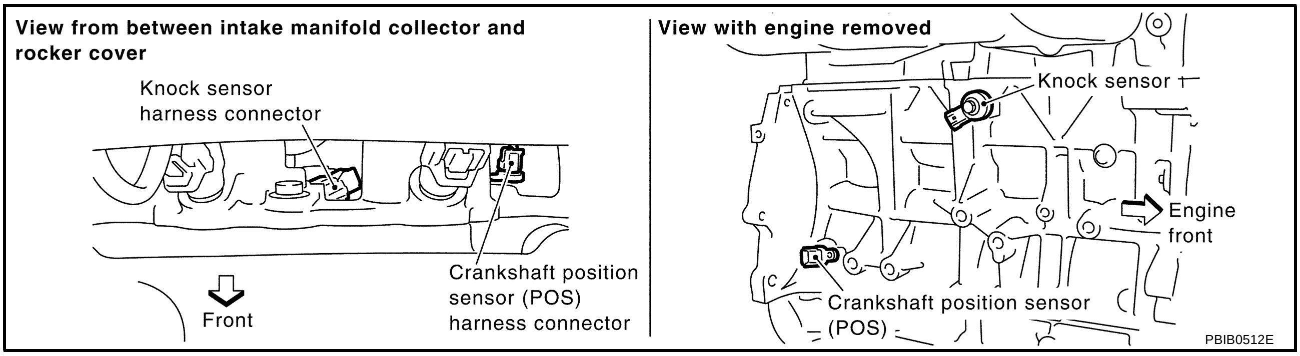

PBIB0512E

On Board Diagnosis Logic

ABS00CPG

The MIL will not light up for these diagnoses.

DTC No.	Trouble Diagnosis Name	DTC Detected Condition	Possible Cause
P0327 0327	Knock sensor circuit low input	An excessively low voltage from the sensor is sent to ECM.	● Harness or connectors (The sensor circuit is open or shorted.) ● Knock sensor
P0328 0328	Knock sensor circuit high input	An excessively high voltage from the sensor is sent to ECM.	

DTC Confirmation Procedure

ABS00CPH

NOTE:
If DTC Confirmation Procedure has been previously conducted, always turn ignition switch OFF and wait at least 10 seconds before conducting the next test.
TESTING CONDITION:
Before performing the following procedure, confirm that battery voltage is more than 10V at idle.

WITH CONSULT-II

1. Turn ignition switch ON and select “DATA MONITOR” mode with CONSULT-II.
2. Start engine and run it for at least 5 seconds at idle speed.
3. If 1st trip DTC is detected, go to EC-307, "Diagnostic Procedure" .

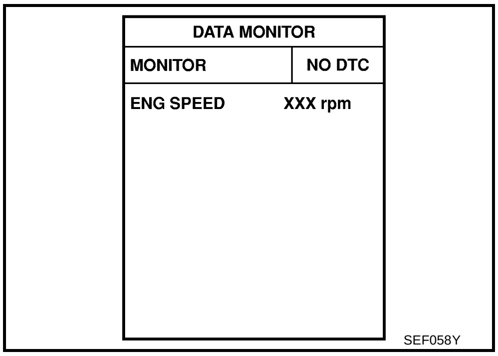

SEF058Y

WITH GST

Follow the procedure “WITH CONSULT-II” above.

Wiring Diagram

ABS00CPI

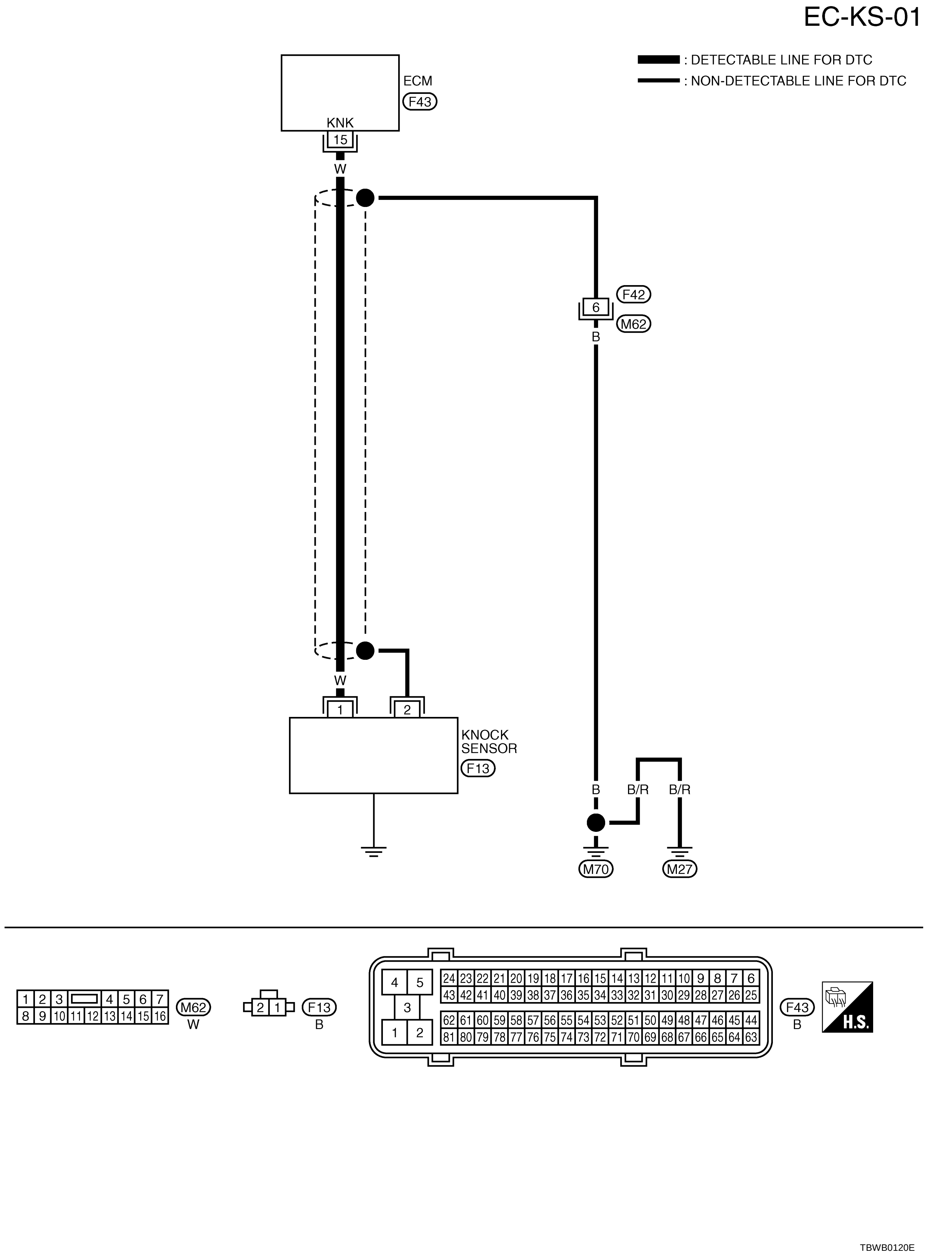

Specification data are reference values and are measured between each terminal and ground.

CAUTION:

Do not use ECM ground terminals when measuring input/output voltage. Doing so may result in damage to the ECM's transistor. Use a ground other than ECM terminals, such as the ground.

TERMINAL NO.	WIRE COLOR	ITEM	CONDITION	DATA (DC Voltage)
15	W	Knock sensor	**[Engine is running]** ● Idle speed	Approximately 2.5V

Diagnostic Procedure

ABS00D8E

1. CHECK KNOCK SENSOR INPUT SIGNAL CIRCUIT-I

1. Turn ignition switch OFF.
2. Disconnect ECM harness connector.
3. Check resistance between ECM terminal 15 and ground. Refer to Wiring Diagram.

   NOTE:
   It is necessary to use an ohmmeter which can measure more than 10 MΩ.

   Resistance: Approximately 530 - 590kΩ [at 20°C (68°F)]

4. Also check harness for short to ground and short to power.

OK or NG

OK >> GO TO 4.
NG >> GO TO 2.

2. CHECK KNOCK SENSOR INPUT SIGNAL CIRCUIT-II

1. Disconnect knock sensor harness connector.

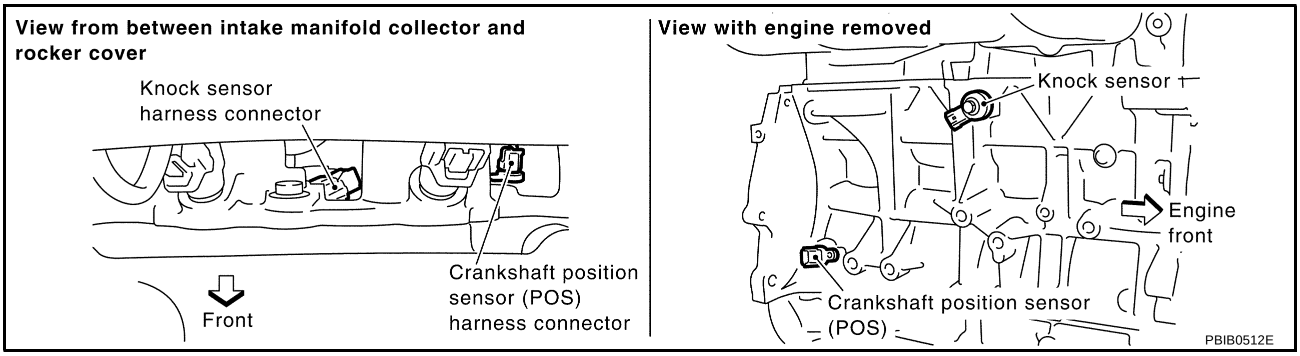

2. Check harness continuity between ECM terminal 15 and knock sensor terminal 1. Refer to Wiring Diagram.

   Continuity should exist.

3. Also check harness for short to ground and short to power.

OK or NG

OK >> GO TO 3.
NG >> Repair open circuit or short to ground or short to power in harness or connectors.

3. CHECK KNOCK SENSOR

Refer to EC-309, "Component Inspection" .

OK or NG

OK >> GO TO 6.
NG >> Replace knock sensor.

4. CHECK GROUND CONNECTIONS

Loosen and retighten ground three screws on the body.
Refer to EC-161, "Ground Inspection" .

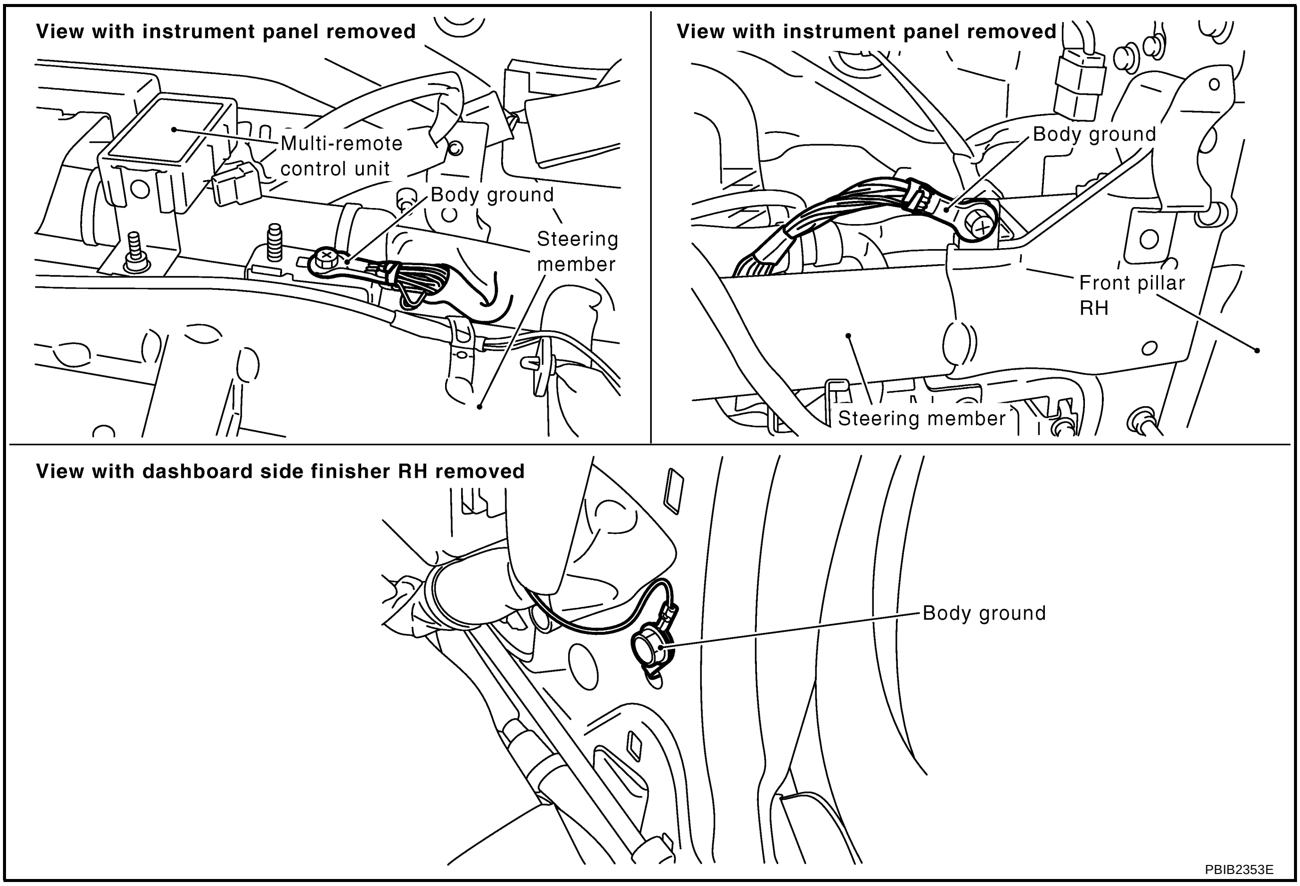

OK or NG

OK >> GO TO 5.
NG >> Repair or replace ground connections.

5. CHECK KNOCK SENSOR SHIELD CIRCUIT FOR OPEN AND SHORT

1. Disconnect knock sensor harness connector.
2. Check harness continuity between knock sensor terminal 2 and ground.

Continuity should exist

3. Also check harness for short to power.

OK or NG

OK >> GO TO 7.
NG >> GO TO 6.

6. DETECT MALFUNCTIONING RART

Check the following.

- Harness connectors F42, M62
- Harness for open or short between knock sensor terminal 2 and ground

>> Repair open circuit or short to power in harness or connectors.

7. CHECK INTERMITTENT INCIDENT

Refer to EC-153, "TROUBLE DIAGNOSIS FOR INTERMITTENT INCIDENT" .

>> **INSPECTION END**

Component Inspection

ABS00CPK

KNOCK SENSOR

Check resistance between knock sensor terminal 1 and ground.

NOTE:
It is necessary to use an ohmmeter which can measure more than 10 MΩ.

Resistance: Approximately 530 - 590kΩ [at 20°C (68°F)]

CAUTION:
Do not use any knock sensors that have been dropped or physically damaged. Use only new ones.

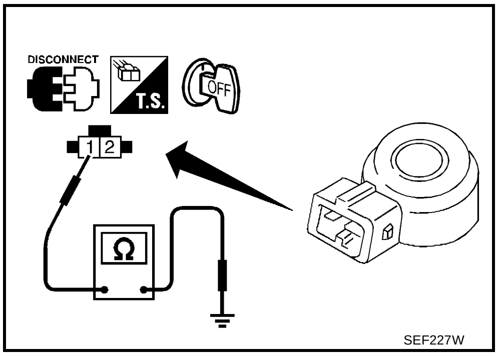

SEF227W

Removal and Installation

ABS00CPL

KNOCK SENSOR

Refer to EM-81, "CYLINDER BLOCK" .

DTC P0335 CKP SENSOR (POS)

PFP:23731

Component Description

ABS00CPM

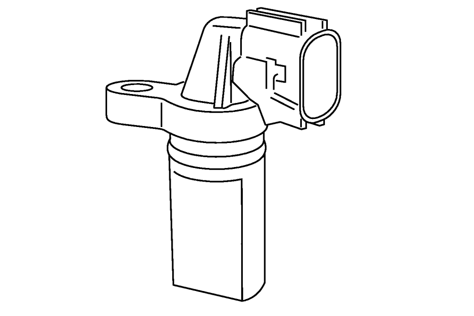
PBIB0562E

The crankshaft position sensor (POS) is located on the cylinder block rear housing facing the gear teeth (cogs) of the signal plate at the end of the crankshaft. It detects the fluctuation of the engine revolution.
The sensor consists of a permanent magnet and Hall IC.
When the engine is running, the high and low parts of the teeth cause the gap with the sensor to change.
The changing gap causes the magnetic field near the sensor to change.
Due to the changing magnetic field, the voltage from the sensor changes.
The ECM receives the voltage signal and detects the fluctuation of the engine revolution.
ECM receives the signals as shown in the figure.

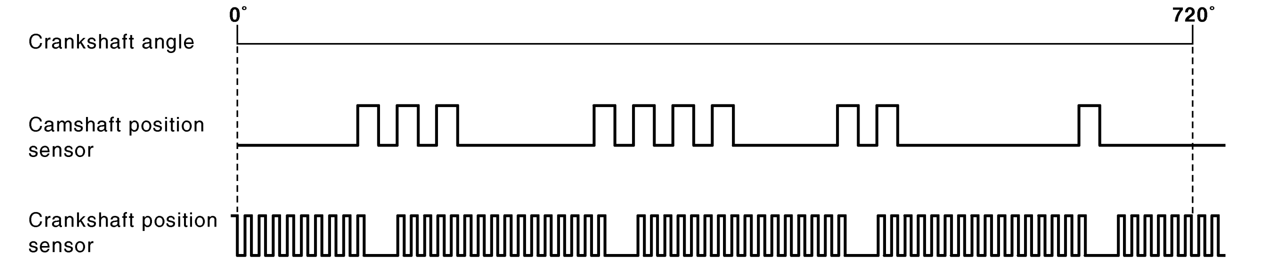

NOTE: Camshaft position sensor signal timing varies with intake valve timing control.
PBIB2382E

CONSULT-II Reference Value in Data Monitor Mode

ABS00CPN

Specification data are reference values.

MONITOR ITEM	CONDITION	SPECIFICATION
ENG SPEED	● Run engine and compare the CONSULT-II value with tachometer indication.	Almost the same speed as the tachometer indication.

On Board Diagnosis Logic

ABS00CPO

DTC No.	Trouble diagnosis name	DTC detecting condition	Possible cause
P0335 0335	Crankshaft position sensor (POS) circuit	● The crankshaft position sensor (POS) signal is not detected by the ECM during the first few seconds of engine cranking. ● The proper pulse signal from the crankshaft position sensor (POS) is not sent to ECM while the engine is running. ● The crankshaft position sensor (POS) signal is not in the normal pattern during engine running.	● Harness or connectors (The sensor circuit is open or shorted) ● Crankshaft position sensor (POS) ● Signal plate

DTC Confirmation Procedure

ABS00CPP

NOTE:
If DTC Confirmation Procedure has been previously conducted, always turn ignition switch OFF and wait at least 10 seconds before conducting the next test.
TESTING CONDITION:
Before performing the following procedure, confirm that battery voltage is more than 10.5V with ignition switch ON.

WITH CONSULT-II

1. Turn ignition switch ON and select “DATA MONITOR” mode with CONSULT-II.
2. Crank engine for at least 2 seconds and run it for at least 5 seconds at idle speed.
3. If 1st trip DTC is detected, go to EC-314, "Diagnostic Procedure" .

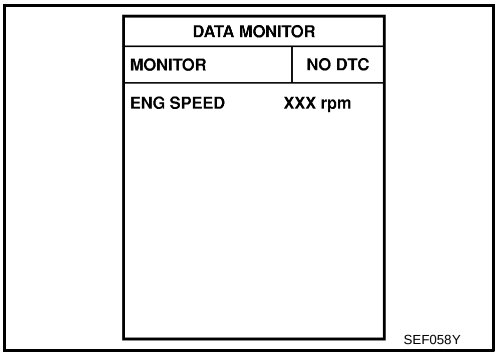

SEF058Y

WITH GST

Follow the procedure “WITH CONSULT-II” above.

A
EC
C
D
E
F
G
H
I
J
K
L
M

Wiring Diagram

ABS00CPQ

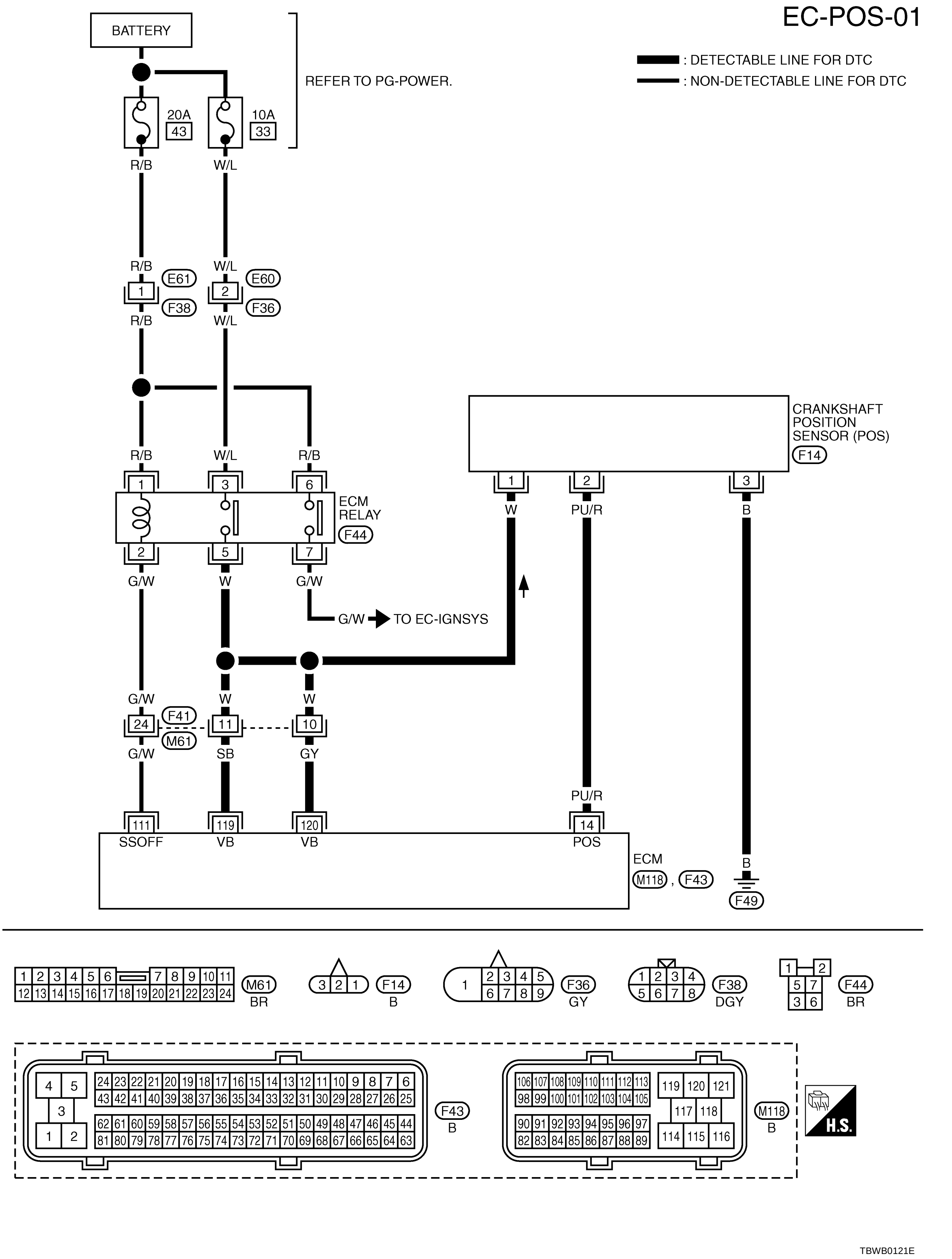

Specification data are reference values and are measured between each terminal and ground.
Pulse signal is measured by CONSULT-II.

CAUTION:

Do not use ECM ground terminals when measuring input/output voltage. Doing so may result in damage to the ECM's transistor. Use a ground other than ECM terminals, such as the ground.

TERMINAL NO.	WIRE COLOR	ITEM	CONDITION	DATA (DC Voltage)
14	PU/R	Crankshaft position sensor (POS)	**[Engine is running]** ● **Warm-up condition** ● Idle speed **NOTE:** The pulse cycle changes depending on rpm at idle.	Approximately 3.0V★ 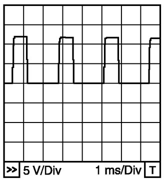 PBIB0527E
			[Engine is running] ● Engine speed is 2,000 rpm	Approximately 3.0V★ 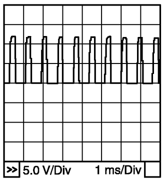 PBIB0528E

★: Average voltage for pulse signal (Actual pulse signal can be confirmed by oscilloscope.)

Diagnostic Procedure

ABS00D8F

1. CHECK GROUND CONNECTIONS

1. Turn ignition switch OFF.
2. Loosen and retighten ground three screws on the body.
   Refer to EC-161, "Ground Inspection" .

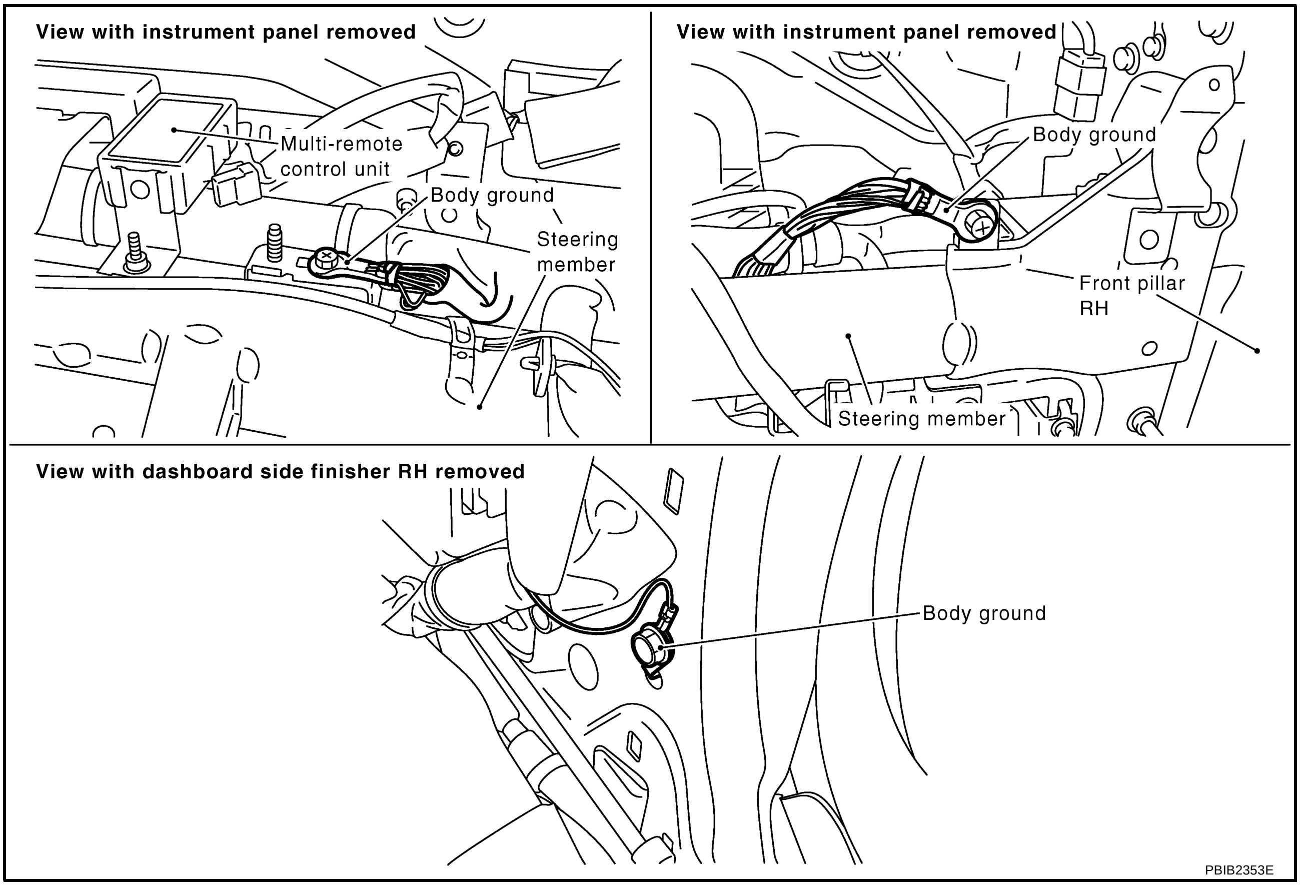

OK or NG

OK >> GO TO 2.
NG >> Repair or replace ground connections.

2. CHECK CRANKSHAFT POSITION (CKP) SENSOR (POS) POWER SUPPLY CIRCUIT

1. Disconnect crankshaft position (CKP) sensor (POS) harness connector.

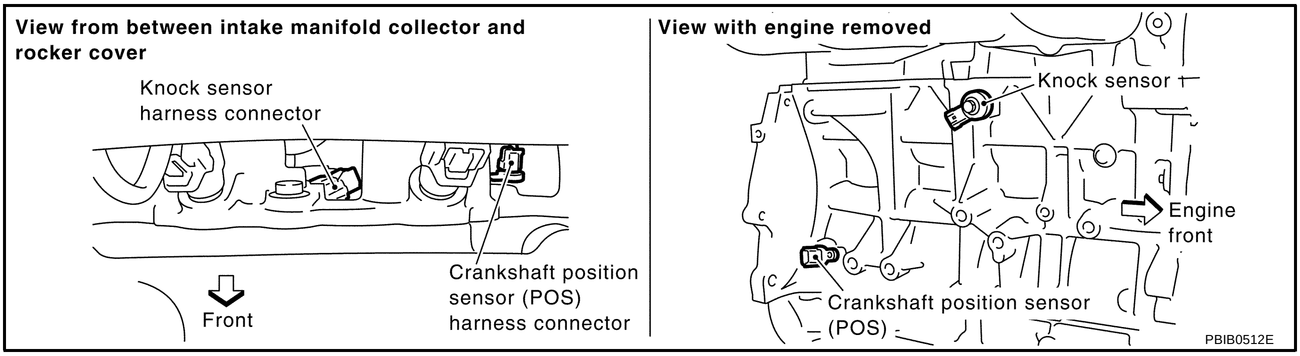

2. Turn ignition switch ON.
3. Check voltage between CKP sensor (POS) terminal 1 and ground with CONSULT-II or tester.

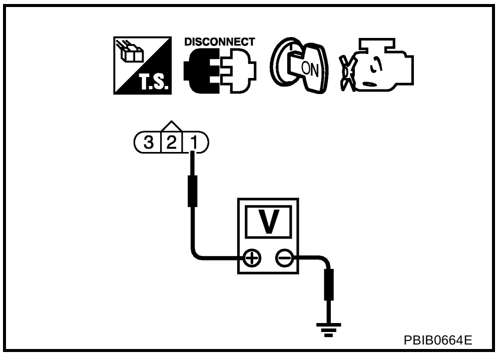

Voltage: Battery voltage

4. Also check harness for short to ground and short to power.

OK or NG

OK >> GO TO 4.
NG >> GO TO 3.

3. DETECT MALFUNCTIONING PART

Check the following.

- Harness connectors F41, M61
- Harness for open or short between CKP sensor (POS) and ECM
- Harness for open or short between CKP sensor (POS) and ECM relay

>> Repair open circuit or short to ground or short to power in harness or connectors.

4. CHECK CKP SENSOR (POS) GROUND CIRCUIT FOR OPEN AND SHORT

1. Turn ignition switch OFF.
2. Check harness continuity between CKP sensor (POS) terminal 3 and ground. Refer to Wiring Diagram.

Continuity should exist.

3. Also check harness for short to power.

OK or NG

OK >> GO TO 5.
NG >> Repair open circuit or short to power in harness or connectors.

5. CHECK CKP SENSOR (POS) INPUT SIGNAL CIRCUIT FOR OPEN AND SHORT

1. Check harness continuity between CKP sensor (POS) terminal 2 and ECM terminal 14.
   Refer to Wiring Diagram.

   Continuity should exist.

2. Also check harness for short to ground and short to power.

OK or NG

OK >> GO TO 6.
NG >> Repair open circuit or short to ground or short to power in harness or connectors.

6. CHECK CRANKSHAFT POSITION SENSOR (POS)

Refer to EC-316, "Component Inspection" .

OK or NG

OK >> GO TO 7.
NG >> Replace crankshaft position sensor (POS).

7. CHECK GEAR TOOTH

Visually check for chipping signal plate gear tooth.

OK or NG

OK >> GO TO 8.
NG >> Replace the signal plate.

8. CHECK INTERMITTENT INCIDENT

Refer to EC-153, "TROUBLE DIAGNOSIS FOR INTERMITTENT INCIDENT" .

>> **INSPECTION END**

Component Inspection

ABS00CPS

CRANKSHAFT POSITION SENSOR (POS)

1. Loosen the fixing bolt of the sensor.
2. Disconnect crankshaft position sensor (POS) harness connector.
3. Remove the sensor.
4. Visually check the sensor for chipping.

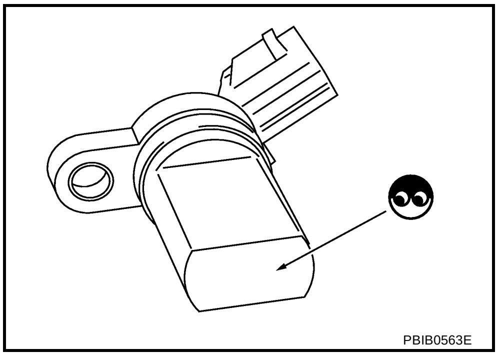

5. Check resistance as shown in the figure.

Terminal No. (Polarity)	Resistance Ω [at 25°C (77°F)]
1 (+) - 2 (-)	Except 0 or ∞
1 (+) - 3 (-)	
2 (+) - 3 (-)	

6. If NG, replace crankshaft position sensor (POS).

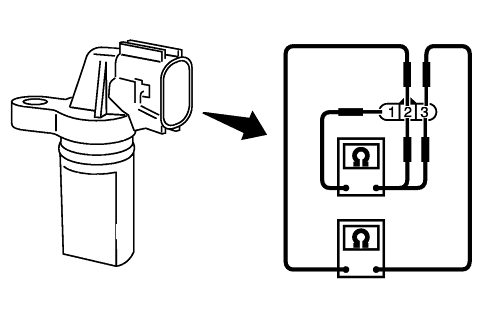

PBIB0564E

A
EC
C
D
E
F
G
H
I
J
K
L
M

Removal and Installation

ABS00CPT

CRANKSHAFT POSITION SENSOR (POS)

Refer to EM-81, "CYLINDER BLOCK" .

DTC P0340 CMP SENSOR (PHASE)

PFP:23731

Component Description

ABS00CPU

The camshaft position sensor (PHASE) senses the retraction with intake valve camshaft (INT) to identify a particular cylinder. The camshaft position sensor (PHASE) senses the piston position.
When the crankshaft position sensor (POS) system becomes inoperative, the camshaft position sensor (PHASE) provides various controls of engine parts instead, utilizing timing of cylinder identification signals.
The sensor consists of a permanent magnet and Hall IC.
When engine is running, the high and low parts of the teeth cause the gap with the sensor to change.
The changing gap causes the magnetic field near the sensor to change.
Due to the changing magnetic field, the voltage from the sensor changes.
ECM receives the signals as shown in the figure.

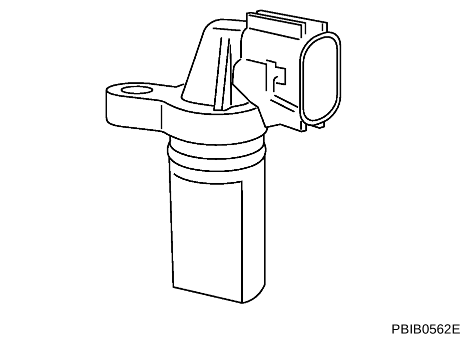

PBIB0562E

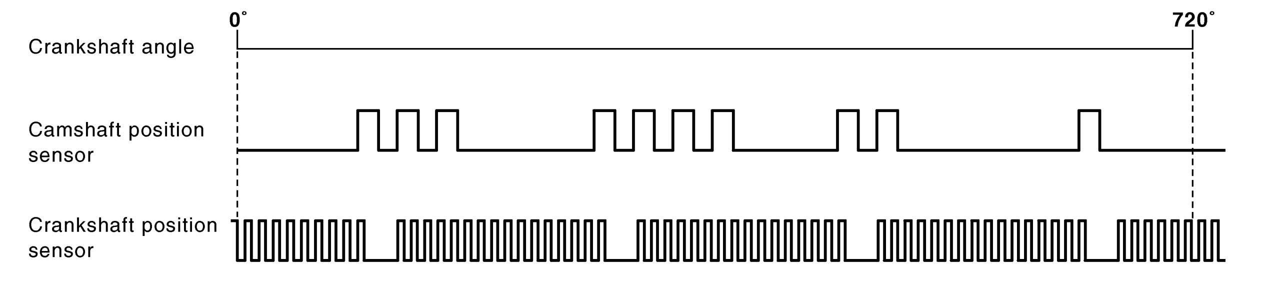

NOTE: Camshaft position sensor signal timing varies with intake valve timing control.

PBIB2382E

On Board Diagnosis Logic

ABS00CPV

DTC No.	Trouble diagnosis name	DTC detecting condition	Possible cause
P0340 0340	Camshaft position sensor (PHASE) circuit	• The cylinder No. signal is not sent to ECM for the first few seconds during engine cranking. • The cylinder No. signal is not set to ECM during engine running. • The cylinder No. signal is not in the normal pattern during engine running.	• Harness or connectors (The sensor circuit is open or shorted) • Camshaft position sensor (PHASE) • Camshaft (INT) • Starter motor (Refer to SC-9, "STARTING SYSTEM" .) • Starting system circuit (Refer to SC-9, "STARTING SYSTEM" .) • Dead (Weak) battery

DTC Confirmation Procedure

ABS00CPW

NOTE:
If DTC Confirmation Procedure has been previously conducted, always turn ignition switch OFF and wait at least 10 seconds before conducting the next test.
TESTING CONDITION:
Before performing the following procedure, confirm that battery voltage is more than 10.5V with ignition switch ON.

WITH CONSULT-II

1. Turn ignition switch ON.

2. Select “DATA MONITOR” mode with CONSULT-II.
3. Crank engine for at least 2 seconds and run it for at least 5 seconds at idle speed.
4. If 1st trip DTC is detected, go to EC-321, "Diagnostic Procedure" .
   If 1st trip DTC is not detected, go to next step.
5. Maintaining engine speed at more than 800 rpm for at least 5 seconds.
6. If 1st trip DTC is detected, go to EC-321, "Diagnostic Procedure" .

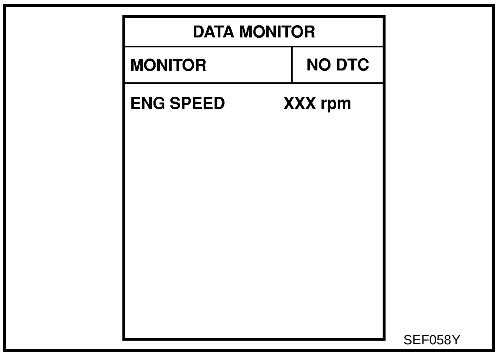

SEF058Y

WITH GST

Follow the procedure “WITH CONSULT-II” above.

Wiring Diagram

ABS00CPX

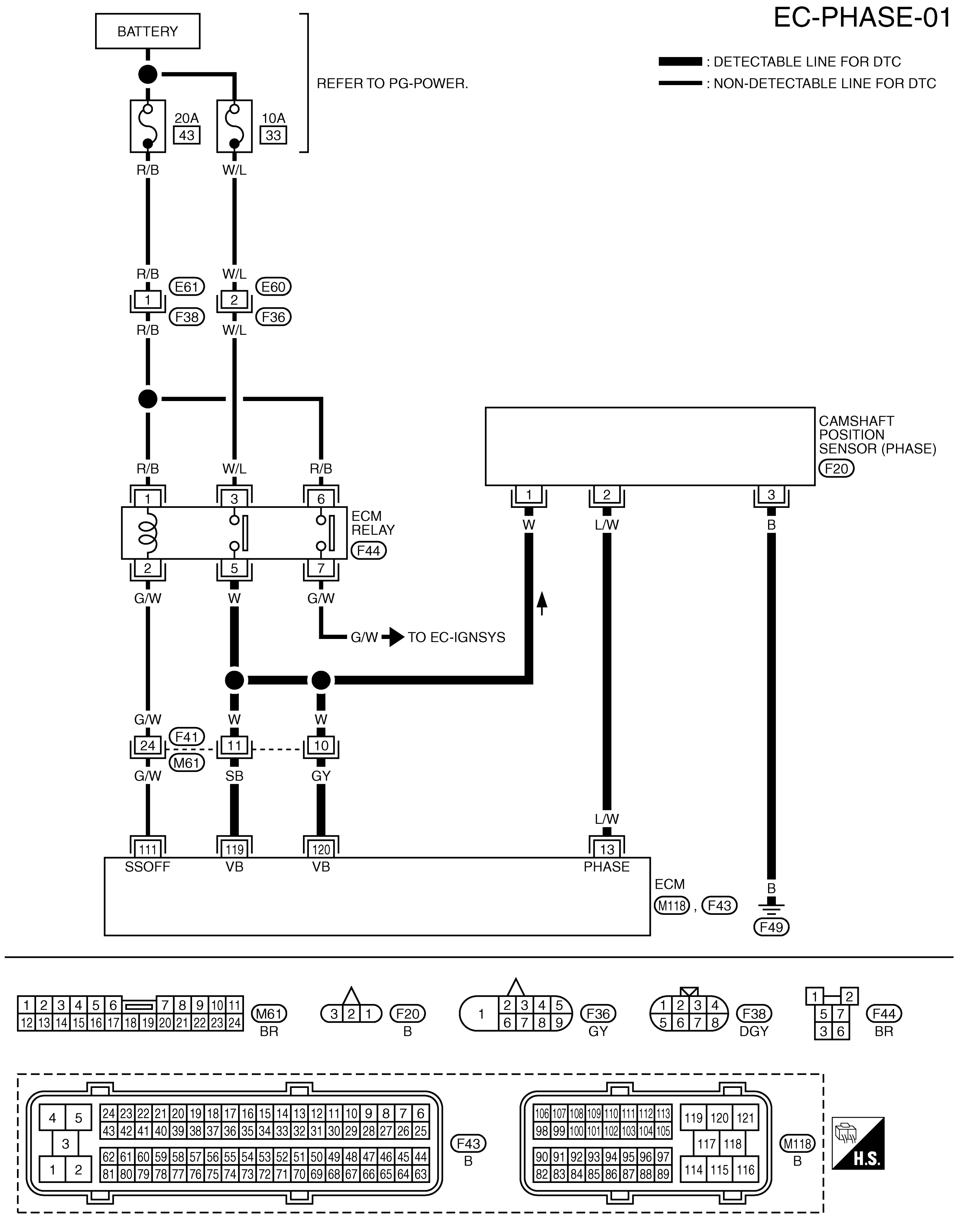

TBWB0122E

Specification data are reference values and are measured between each terminal and ground.
Pulse signal is measured by CONSULT-II.

CAUTION:

Do not use ECM ground terminals when measuring input/output voltage. Doing so may result in damage to the ECM's transistor. Use a ground other than ECM terminals, such as the ground.

TERMINAL NO.	WIRE COLOR	ITEM	CONDITION	DATA (DC Voltage)
13	L/W	Camshaft position sensor (PHASE)	**[Engine is running]** ● **Warm-up condition** ● Idle speed **NOTE:** The pulse cycle changes depending on rpm at idle.	1.0 - 4.0V★ 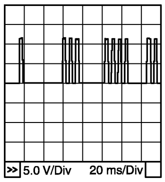 PBIB0525E
			[Engine is running] ● Engine speed is 2,000 rpm.	1.0 - 4.0V★ 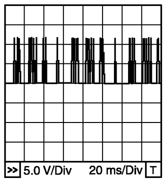 PBIB0526E

★: Average voltage for pulse signal (Actual pulse signal can be confirmed by oscilloscope.)

Diagnostic Procedure

ABS00CPY

1. CHECK STARTING SYSTEM

Turn ignition switch to START position.

Does the engine turn over?

Does the starter motor operate?

Yes or No

Yes >> GO TO 2.

No >> Check starting system. (Refer to SC-9, "STARTING SYSTEM" .)

2. CHECK GROUND CONNECTIONS

1. Turn ignition switch OFF.
2. Loosen and retighten three ground screws on the body. Refer to EC-161, "Ground Inspection" .

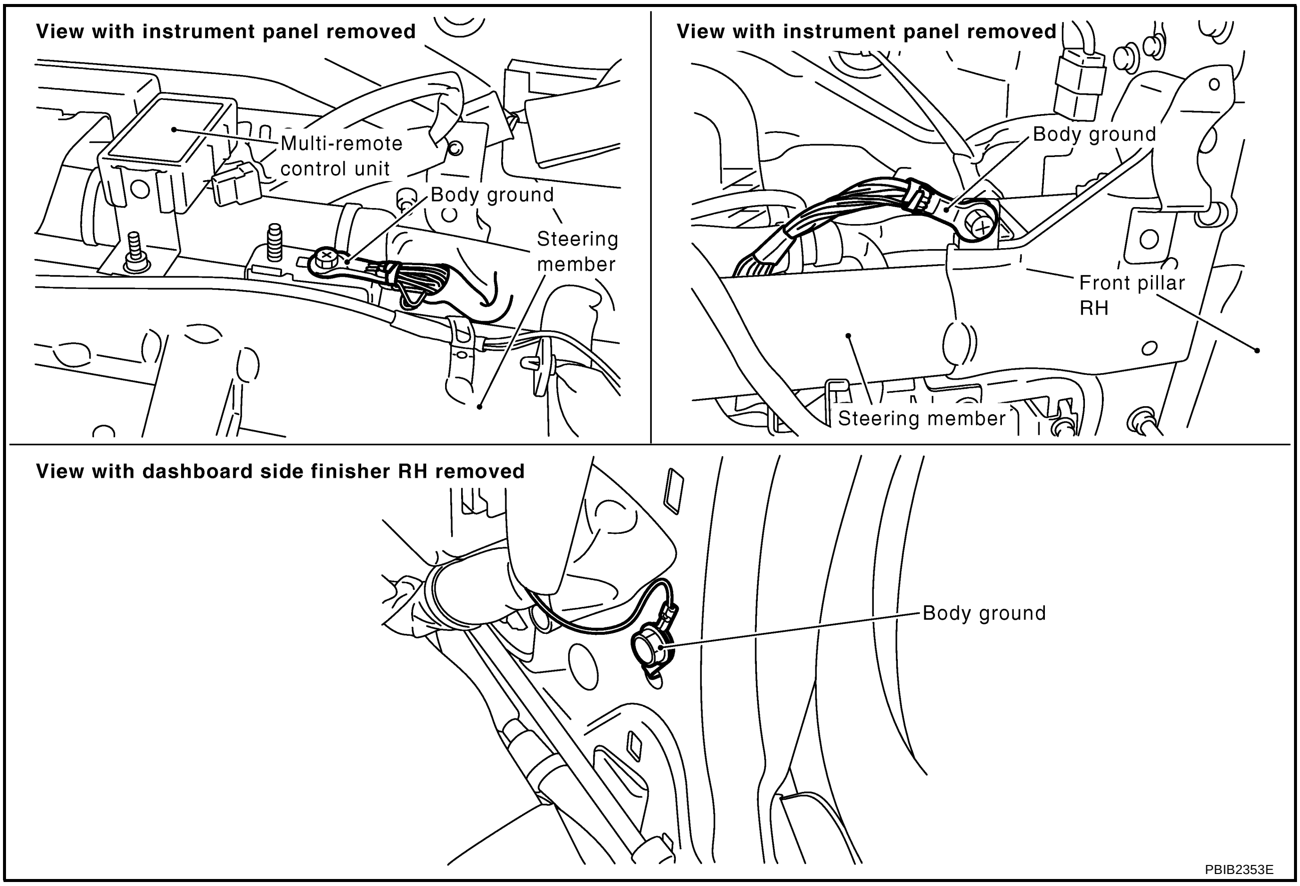

OK or NG

OK >> GO TO 3.
NG >> Repair or replace ground connections.

3. CHECK CAMSHAFT POSITION (CMP) SENSOR (PHASE) POWER SUPPLY CIRCUIT

1. Disconnect camshaft position (CMP) sensor (PHASE) harness connector.
2. Turn ignition switch ON.

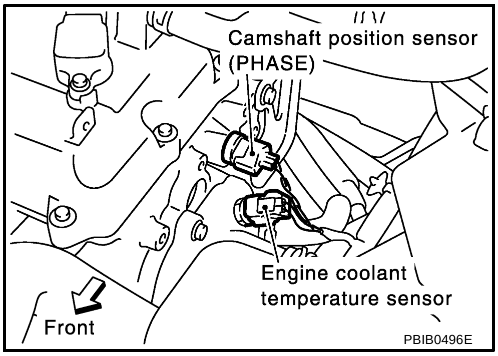

3. Check voltage between CMP sensor (PHASE) terminal 1 and ground with CONSULT-II or tester.

Voltage: Battery voltage

4. Also check harness for short to ground and short to power.

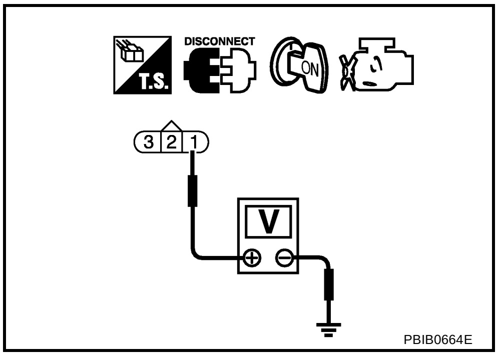

OK or NG

OK >> GO TO 5.
NG >> GO TO 4.

4. DETECT MALFUNCTIONING PART

Check the following.

- Harness connectors F41, M61
- Harness for open or short between CMP sensor (PHASE) and ECM
- Harness for open or short between CMP sensor (PHASE) and ECM relay

>> Repair open circuit or short to ground or short to power in harness or connectors.

5. CHECK CMP SENSOR (PHASE) GROUND CIRCUIT FOR OPEN AND SHORT

1. Turn ignition switch OFF.
2. Check harness continuity between CMP sensor (PHASE) terminal 3 and ground.

Continuity should exist.

3. Also check harness for short to power.

OK or NG

OK >> GO TO 6.
NG >> Repair open circuit or short to power in harness or connectors.

6. CHECK CMP SENSOR (PHASE) INPUT SIGNAL CIRCUIT FOR OPEN AND SHORT

1. Disconnect ECM harness connector.
2. Check harness continuity between ECM terminal 13 and CMP sensor (PHASE) terminal 2.
   Refer to Wiring Diagram.

Continuity should exist.

3. Also check harness for short to ground or short to power.

OK or NG

OK >> GO TO 7.
NG >> Repair open circuit or short to ground or short to power in harness or connectors.

7. CHECK CAMSHAFT POSITION SENSOR (PHASE)

Refer to EC-324, "Component Inspection" .

OK or NG

OK >> GO TO 8.
NG >> Replace camshaft position sensor (PHASE).

8. CHECK CAMSHAFT (INT)

Check the following.

- Accumulation of debris to the signal plate of camshaft rear end
- Chipping signal plate of camshaft rear end

OK or NG

OK >> GO TO 9.
NG >> Remove debris and clean the signal plate of camshaft rear end or replace camshaft.

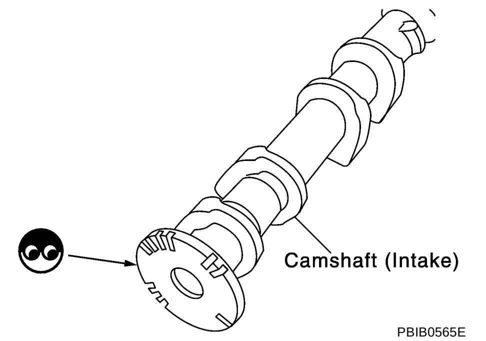

PBIB0565E

9. CHECK INTERMITTENT INCIDENT

Refer to EC-153, "TROUBLE DIAGNOSIS FOR INTERMITTENT INCIDENT" .

>> **INSPECTION END**

Component Inspection

ABS00CPZ

CAMSHAFT POSITION SENSOR (PHASE)

1. Loosen the fixing bolt of the sensor.
2. Disconnect camshaft position sensor (PHASE) harness connector.
3. Remove the sensor.
4. Visually check the sensor for chipping.

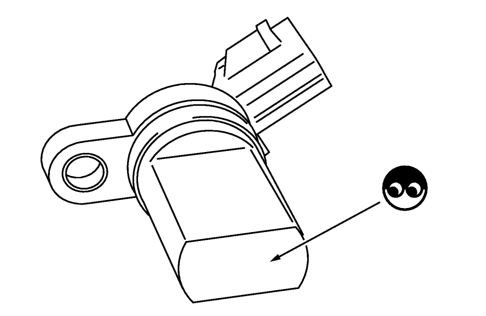
PBIB0563E

5. Check resistance as shown in the figure.

Terminal No. (Polarity)	Resistance Ω [at 25°C (77°F)]
1 (+) - 2 (-)	Except 0 or ∞
1 (+) - 3 (-)	
2 (+) - 3 (-)	

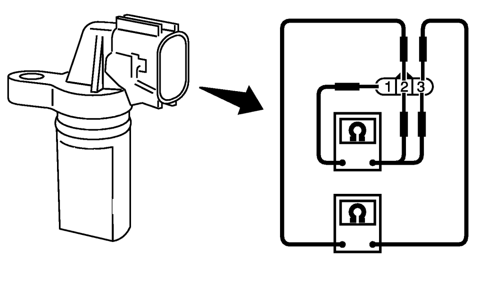

PBIB0564E

Removal and Installation

ABS00CQ0

CAMSHAFT POSITION SENSOR (PHASE)

Refer to EM-37, "CAMSHAFT" .

DTC P0420 THREE WAY CATALYST FUNCTION

PFP:20905

On Board Diagnosis Logic

ABS00CQ1

The ECM monitors the switching frequency ratio of heated oxygen sensors 1 and 2.
A three way catalyst (manifold) with high oxygen storage capacity will indicate a low switching frequency of heated oxygen sensor 2.
As oxygen storage capacity decreases, the heated oxygen sensor 2 switching frequency will increase.
When the frequency ratio of heated oxygen sensors 1 and 2 approaches a specified limit value, the three way catalyst (manifold) malfunction is diagnosed.

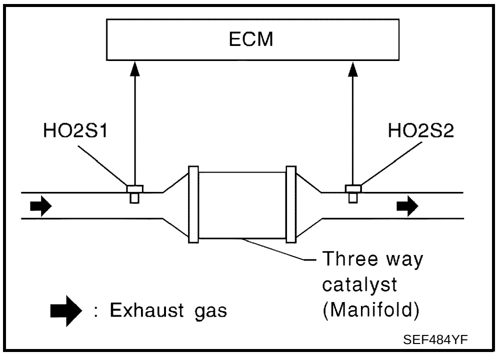

SEF484YF

DTC No.	Trouble diagnosis name	DTC detecting condition	Possible cause
P0420 0420	Catalyst system efficiency below threshold	● Three way catalyst (manifold) does not operate properly. ● Three way catalyst (manifold) does not have enough oxygen storage capacity.	● Three way catalyst (manifold) ● Exhaust tube ● Intake air leaks ● Fuel injector ● Fuel injector leaks ● Spark plug ● Improper ignition timing

DTC Confirmation Procedure

ABS00CQ2

NOTE:
If DTC Confirmation Procedure has been previously conducted, always turn ignition switch OFF and wait at least 10 seconds before conducting the next test.

WITH CONSULT-II

TESTING CONDITION:
Do not hold engine speed for more than the specified minutes below.

1. Turn ignition switch ON and select “DATA MONITOR” mode with CONSULT-II.
2. Start engine and warm it up to normal operating temperature.
3. Turn ignition switch OFF and wait at least 10 seconds.
4. Start engine and keep the engine speed between 3,500 and 4,000 rpm for at least 1 minute under no load.
5. Let engine idle for 1 minute.
6. Make sure that “COOLAN TEMP/S” indicates more than 70°C (158°F).
   If not, warm up engine and go to next step when “COOLAN TEMP/S” indication reaches to 70°C (158°F).
7. Open engine hood.
8. Select “DTC & SRT CONFIRMATION” then “SRT WORK SUPPORT” mode with CONSULT-II.
9. Rev engine up to 2,500 to 3,500 rpm and hold it for 3 consecutive minutes, then release the accelerator pedal completely.
   If “INCMP” of “CATALYST” changed to “CMPLT”, GO TO STEP 12.
10. Wait 5 seconds at idle.

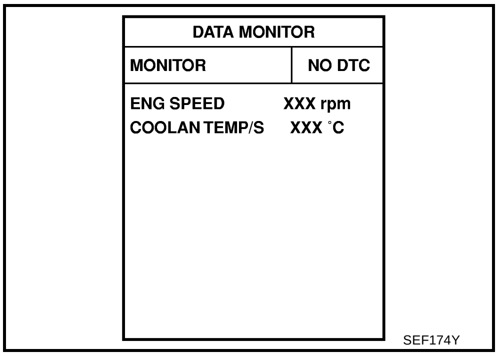

SEF174Y

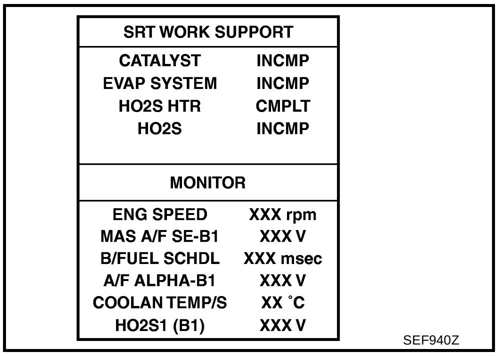

SEF940Z

11. Rev engine up to 2,000 to 3,000 rpm and maintain it until “IMCMP” of “CATALYST” changes to “CMPLT” (it will take approximately 5 minutes).
    If not “CMPLT”, stop engine and cool it down to less than 70°C (158°F) and then retest step 1.

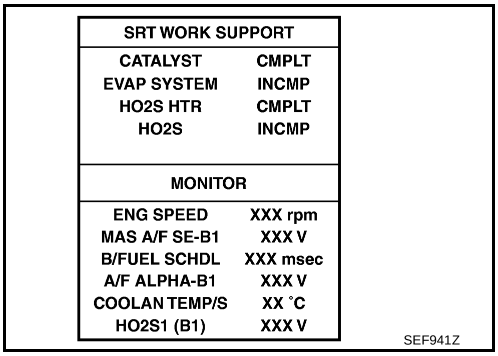

SEF941Z

12. Select “SELF-DIAG RESULTS” mode with CONSULT-II.
13. Confirm that the 1st trip DTC is not detected.
    If the 1st trip DTC is detected, go to EC-328, "Diagnostic Procedure" .

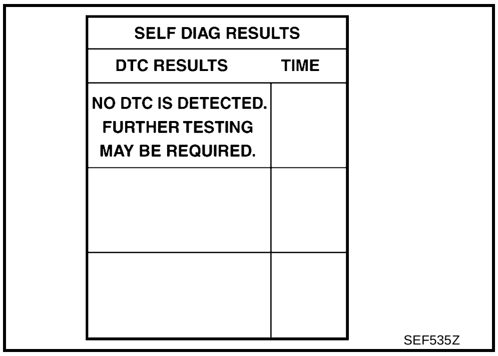

SEF535Z

Overall Function Check

ABS00CQ3

Use this procedure to check the overall function of the three way catalyst (Manifold). During this check, a 1st trip DTC might not be confirmed.

CAUTION:

Always drive vehicle at a safe speed.

WITH GST

1. Start engine and warm it up to the normal operating temperature.
2. Turn ignition switch OFF and wait at least 10 seconds.
3. Start engine and keep the engine speed between 3,500 and 4,00 rpm for at least 1 minute under no load.
4. Let engine idle for 1 minute.
5. Open engine hood.
6. Set voltmeters probes between ECM terminal 35 (HO2S1 signal) and ground, and ECM terminal 74 (HO2S2 signal) and ground.
7. Keep engine speed at 2,000 rpm constant under no load.

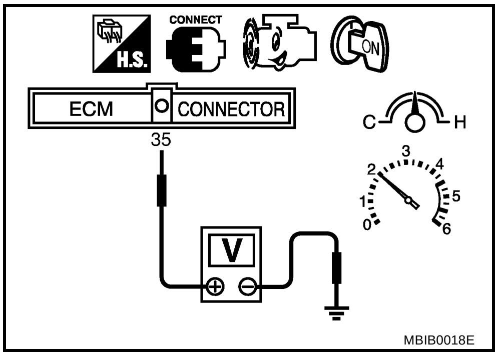

MBIB0018E

8. Make sure that the voltage switching frequency (high & low) between ECM terminal 74 and ground is very less than that of ECM terminal 35 and ground.
   Switching frequency ratio = A/B
   A: Heated oxygen sensor 2 voltage switching frequency
   B: Heated oxygen sensor 1 voltage switching frequency
   This ratio should be less than 0.75.
   If the ratio is greater than above, it means three way catalyst does not operate properly. Go to EC-328, "Diagnostic Procedure" .

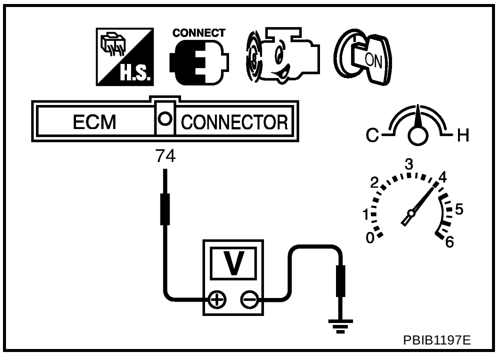

PBIB1197E

NOTE:
If the voltage at terminal 35 does not switch periodically more than 5 times within 10 seconds at step 8, perform trouble diagnosis for DTC P0133 first. (See EC-233 .)

Diagnostic Procedure

ABS00CQ4

1. CHECK EXHAUST SYSTEM

Visually check exhaust tubes and muffler for dent.

OK or NG

OK >> GO TO 2.
NG >> Repair or replace.

2. CHECK EXHAUST GAS LEAK

1. Start engine and run it at idle.
2. Listen for an exhaust gas leak before the three way catalyst (manifold).

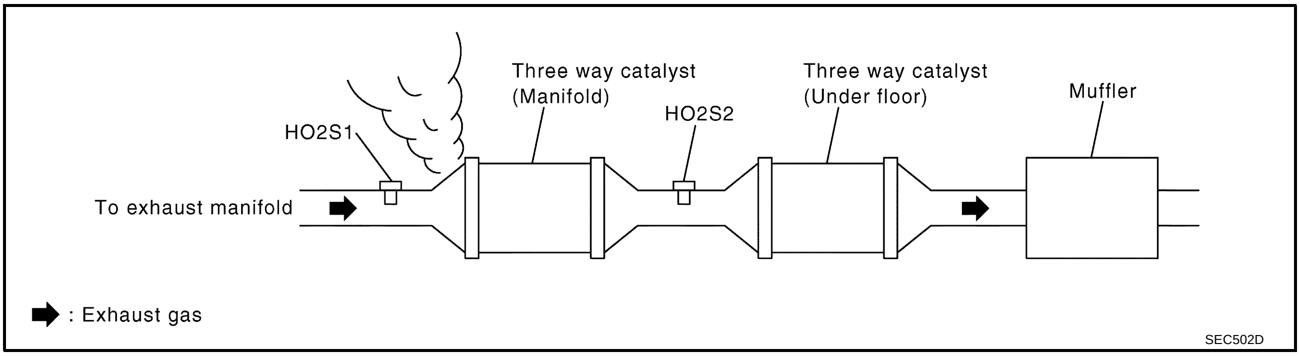

SEC502D

OK or NG

OK >> GO TO 3.
NG >> Repair or replace.

3. CHECK INTAKE AIR LEAK

Listen for an intake air leak after the mass air flow sensor.

OK or NG

OK >> GO TO 4.
NG >> Repair or replace.

4. CHECK IGNITION TIMING

Check for ignition timing. Refer to EC-70, "Basic Inspection" .

Items	Specifications	
Target idle speed	A/T	700 ± 50 rpm (in P or N position)
	M/T	700 ± 50 rpm (in Neutral position)
Ignition timing	A/T	15 ± 5° BTDC (in P or N position)
	M/T	15 ± 5° BTDC (in Neutral position)

OK or NG

OK >> GO TO 5.
NG >> Follow the EC-70, "Basic Inspection" .

5. CHECK INJECTOR

1. Refer to Wiring Diagram for Injectors, EC-608 .
2. Stop engine and then turn ignition switch ON.
3. Check voltage between ECM terminals 22, 23, 41, 42 and ground with CONSULT-II or tester.

Voltage: Battery voltage

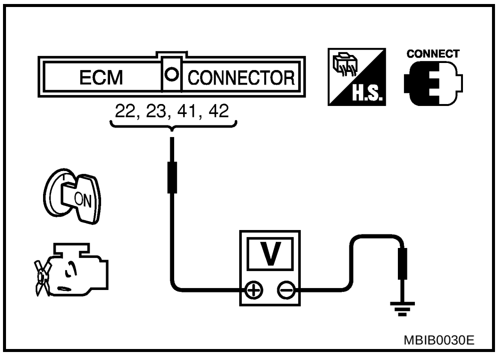

OK or NG

OK >> GO TO 6.
NG >> Perform EC-609, "Diagnostic Procedure" .

6. CHECK FUNCTION OF IGNITION COIL-I

CAUTION:

Do the following procedure in the place where ventilation is good without the combustible.

1. Turn ignition switch OFF.
2. Remove fuel pump fuse located in fuse box to release fuel pressure.

   NOTE:

   Do not use CONSULT-II to release fuel pressure, or fuel pressure applies again during the following procedure.

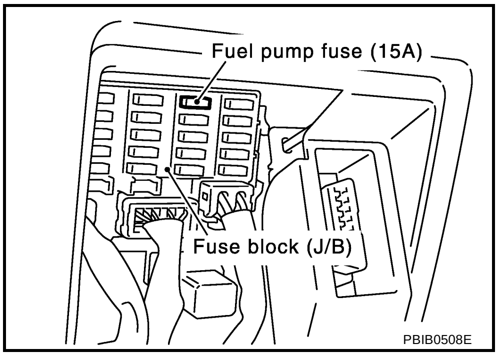

3. Start engine.
4. After engine stalls, crank it 2 or 3 times to release all fuel pressure.
5. Turn ignition switch OFF.
6. Remove all ignition coil harness connectors to avoid the electrical discharge from the ignition coils.
7. Remove ignition coil and spark plug of the cylinder to be checked.
8. Crank engine for 5 seconds or more to remove combustion gas in the cylinder.
9. Connect spark plug and harness connector to ignition coil.
10. Fix ignition coil using a rope etc. with gap of 13 - 17 mm between the edge of the spark plug and grounded metal portion as shown in the figure.

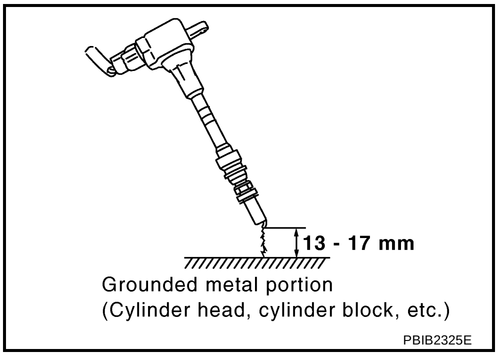

11. Crank engine for about three seconds, and check whether spark is generated between the spark plug and the grounded metal portion.

    Spark should be generated.

    CAUTION:

    - **Do not approach to the spark plug and the ignition coil within 50cm. Be careful not to get an electrical shock while checking, because the electrical discharge voltage becomes 20kV or more.**
    - **It might cause to damage the ignition coil if the gap of 17 mm or more is taken.**

    NOTE:

    When the gap is 13 mm or less, the spark might be generated even if the coil is malfunctioning.

OK or NG

OK >> GO TO 10.
NG >> GO TO 7.

7. CHECK FUNCTION OF IGNITION COIL-II

1. Turn ignition switch OFF.
2. Disconnect spark plug and connect a known-good spark plug.
3. Crank engine for about 3 seconds, and recheck whether spark is generated between the spark plug and the grounded metal portion.

    Spark should be generated.

OK or NG

OK >> GO TO 8.
NG >> Check ignition coil, power transistor and their circuits. Refer to EC-586 .

A
EC
C
D
E
F
G
H
I
J
K
L
M

8. CHECK SPARK PLUG

Check the spark plugs and check for fouling, etc.

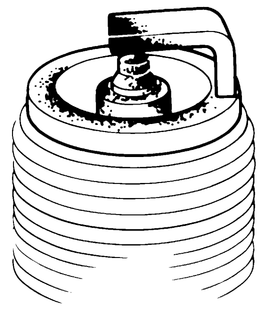

SEF156I

OK or NG

OK >> GO TO 9.
NG >> Repair or replace spark plug (s) with standard type one (s). For spark plug type ignition coil. Refer to MA-18, "Changing Spark Plugs (Platinum-Tipped Type)" .

9. CHECK FUNCTION OF IGNITION COIL-III

1. Reconnect the initial spark plugs.
2. Crank engine for about three seconds, and recheck whether spark is generated between the spark plug and the grounded portion.

Spark should be generated.

OK or NG

OK >> **INSPECTION END**
NG >> Replace spark plug(s) with standard type one(s). For spark plug type, refer to MA-18, "Changing Spark Plugs (Platinum-Tipped Type)" .

10. CHECK INJECTOR

1. Turn ignition switch OFF.
2. Remove injector assembly. Refer to EM-30, "FUEL INJECTOR AND FUEL TUBE" .
   Keep fuel hose and all injectors connected to injector gallery.
3. Disconnect ignition coil assembly harness connector.
4. Reconnect all injector harness connectors disconnected.
5. Turn ignition switch ON.
   Make sure fuel does not drip from injector.

OK or NG

OK (Does not drip)>>GO TO 11.
NG (Drips)>>Replace the injector(s) from which fuel is dripping.

11. CHECK INTERMITTENT INCIDENT

Perform EC-153, "TROUBLE DIAGNOSIS FOR INTERMITTENT INCIDENT" .

Trouble is fixed>>**INSPECTION END**
Trouble is not fixed>>Replace three way catalyst (manifold).

DTC P0441 EVAP CONTROL SYSTEM

PFP:14950

System Description

ABS00CQ5

NOTE:

If DTC P0441 is displayed with other DTC such as P2122, P2123 P2127, P2128, P2138, first perform trouble diagnosis for other DTC.

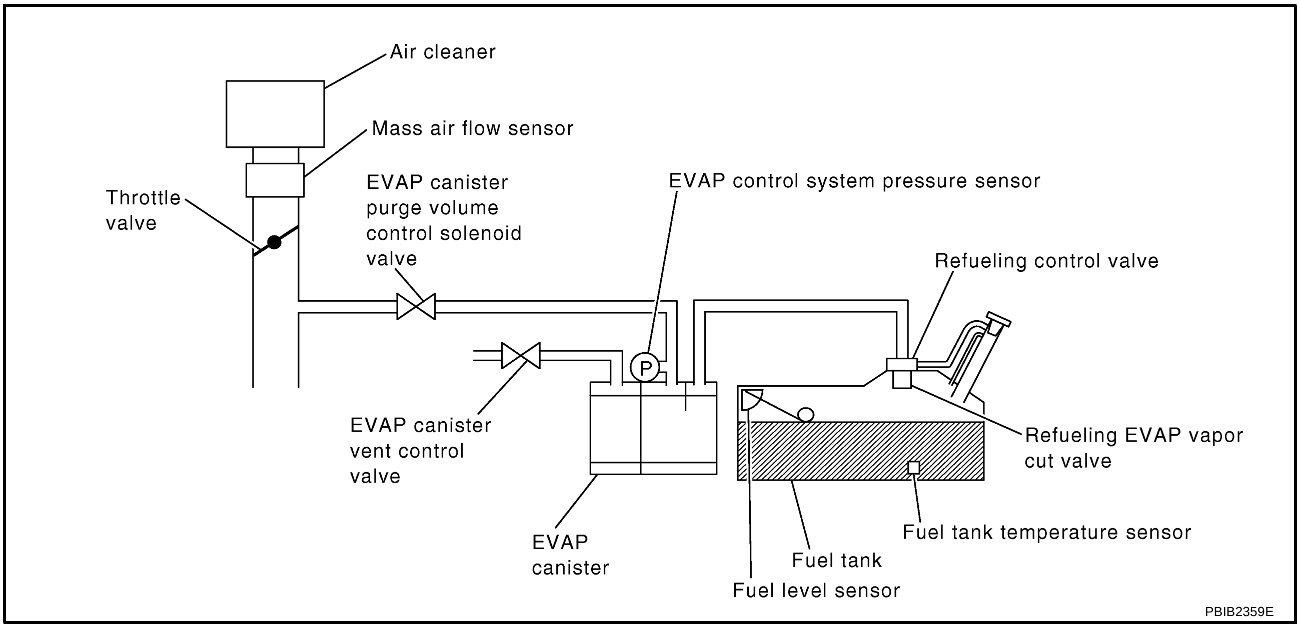

In this evaporative emission (EVAP) control system, purge flow occurs during non-closed throttle conditions. Purge volume is related to air intake volume. Under normal purge conditions (non-closed throttle), the EVAP canister purge volume control solenoid valve is open to admit purge flow. Purge flow exposes the EVAP control system pressure sensor to intake manifold vacuum.

On Board Diagnosis Logic

ABS00CQ6

Under normal conditions (non-closed throttle), sensor output voltage indicates if pressure drop and purge flow are adequate. If not, a malfunction is determined.

DTC No.	Trouble diagnosis name	DTC detecting condition	Possible cause
P0441 0441	EVAP control system incorrect purge flow	EVAP control system does not operate properly, EVAP control system has a leak between intake manifold and EVAP control system pressure sensor.	● EVAP canister purge volume control solenoid valve stuck closed ● EVAP control system pressure sensor and the circuit ● Loose, disconnected or improper connection of rubber tube ● Blocked rubber tube ● Cracked EVAP canister ● EVAP canister purge volume control solenoid valve circuit ● Accelerator pedal position sensor ● Blocked purge port ● EVAP canister vent control valve

DTC Confirmation Procedure

ABS00CQ7

CAUTION:

Always drive vehicle at a safe speed.

NOTE:

If DTC Confirmation Procedure has been previously conducted, always turn ignition switch OFF and wait at least 10 seconds before conducting the next test.

TESTING CONDITION:

Always perform test at a temperature of 5°C (41°F) or more.

WITH CONSULT-II

1. Start engine and warm it up to normal operating temperature.
2. Turn ignition switch OFF and wait at least 10 seconds.
3. Start engine and let it idle for at least 70 seconds.
4. Select “PURG FLOW P0441” of “EVAPORATIVE SYSTEM” in “DTC CONFIRMATION” mode with CONSULT-II.
5. Touch “START”.
   If “COMPLETED” is displayed, go to step 7.
6. When the following conditions are met, “TESTING” will be displayed on the CONSULT-II screen. Maintain the conditions continuously until “TESTING” changes to “COMPLETED”. (It will take at least 35 seconds.)

Shift lever	Suitable position
VHCL SPEED SE	32 - 120 km/h (20 - 75 MPH)
ENG SPEED	500 - 3,800 rpm
B/FUEL SCHDL	1.0 - 10.0 msec
Engine coolant temperature	More than 0°C

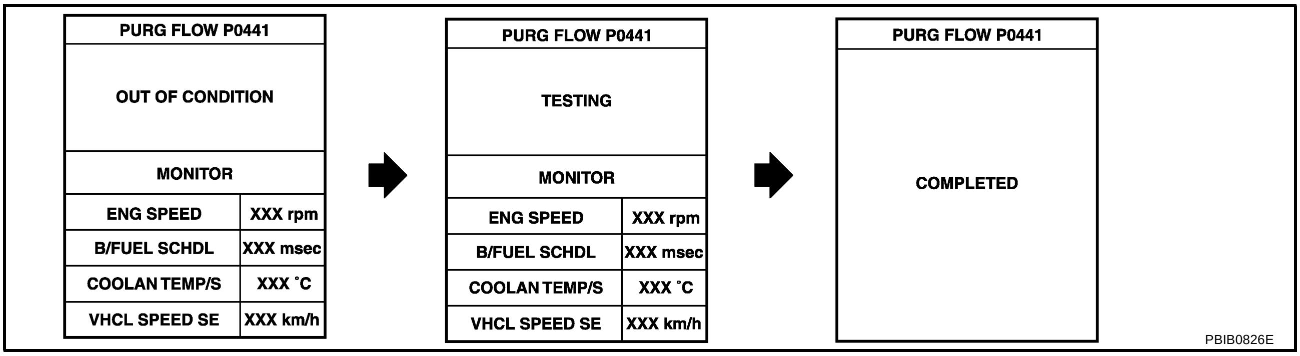

If TESTING is not changed for a long time, retry from step 2.

7. Make sure that “OK” is displayed after touching “SELF-DIAG RESULTS”. If “NG” is displayed, refer to EC-334, "Diagnostic Procedure" .

Overall Function Check

ABS00CQ8

Use this procedure to check the overall monitoring function of the EVAP control system purge flow monitoring. During this check, a 1st trip DTC might not be confirmed.

WITH GST

1. Lift up drive wheels.
2. Start engine and warm it up to normal operating temperature.
3. Turn ignition switch OFF, wait at least 10 seconds.
4. Start engine and wait at least 70 seconds.

5. Set voltmeter probes to ECM terminals 32 (EVAP control system pressure sensor signal) and ground.
6. Check EVAP control system pressure sensor value at idle speed and note it.
7. Establish and maintain the following conditions for at least 1 minute.

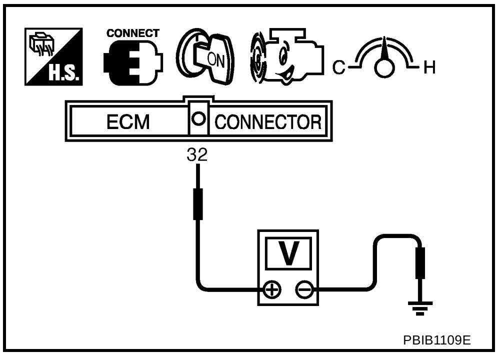

PBIB1109E

Air conditioner switch	ON
Headlamp switch	ON
Rear window defogger switch	ON
Engine speed	Approx. 3,000 rpm
Shift position	Any position other than P, N or R (A/T), Neutral (M/T)

8. Verify that EVAP control system pressure sensor value stays 0.1V less than the value at idle speed (measured at step 6) for at least 1 second.
9. If NG, go to EC-334, "Diagnostic Procedure" .

Diagnostic Procedure

ABS00CQ9

1. CHECK EVAP CANISTER

1. Turn ignition switch OFF.
2. Check EVAP canister for cracks.

OK or NG

OK (With CONSULT-II)>>GO TO 2.
OK (Without CONSULT-II)>>GO TO 3.
NG >> Replace EVAP canister.

2. CHECK PURGE FLOW

With CONSULT-II

1. Disconnect vacuum hose connected to EVAP canister purge volume control solenoid valve at EVAP service port and install vacuum gauge.
2. Start engine and let it idle.
3. Select "PURG VOL CONT/V" in "ACTIVE TEST" mode with CONSULT-II.
4. Rev engine up to 2,000 rpm.

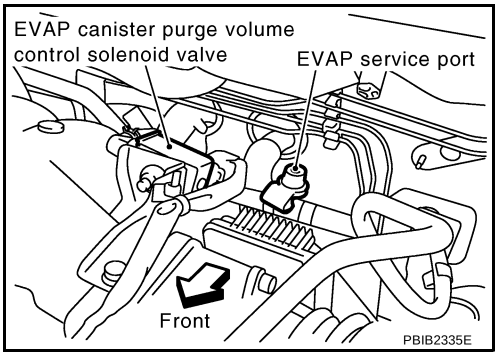

PBIB2335E

5. Touch "Qd" and "Qu" on CONSULT-II screen to adjust "PURG VOL CONT/V" opening and check vacuum existence.

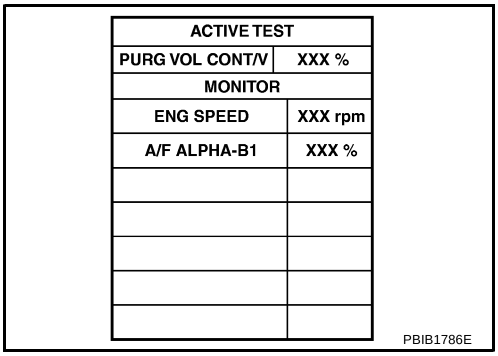

PBIB1786E

PURG VOL CONT/V	VACUUM
100%	Should exist.
0%	should not exist.

OK or NG

OK >> GO TO 7.
NG >> GO TO 4.

3. CHECK PURGE FLOW

Without CONSULT-II

1. Start engine and warm it up to normal operating temperature.
2. Stop engine.
3. Disconnect vacuum hose connected to EVAP canister purge volume control solenoid valve at EVAP service port and install vacuum gauge.
4. Start engine and let it idle for at least 80 seconds.
5. Check vacuum gauge indication when revving engine up to 2,000 rpm.

   Vacuum should exist.

6. Release the accelerator pedal fully and let idle.

   Vacuum should not exist.

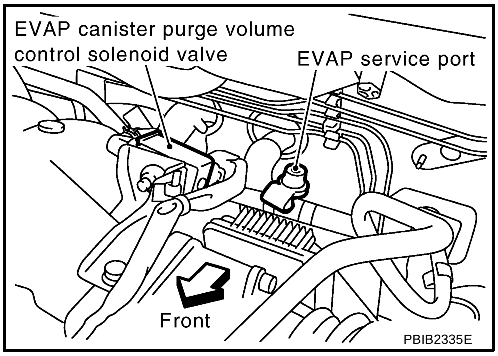

OK or NG

OK >> GO TO 7.
NG >> GO TO 4.

4. CHECK EVAP PURGE LINE

1. Turn ignition switch OFF.
2. Check EVAP purge line for improper connection or disconnection.
   Refer to EC-31, "EVAPORATIVE EMISSION LINE DRAWING" .

OK or NG

OK >> GO TO 5.
NG >> Repair it.

5. CHECK EVAP PURGE HOSE AND PURGE PORT

1. Disconnect purge hoses connected to EVAP service port **A** and EVAP canister purge volume control solenoid valve **B** .
2. Blow air into each hose and EVAP purge port **C** .

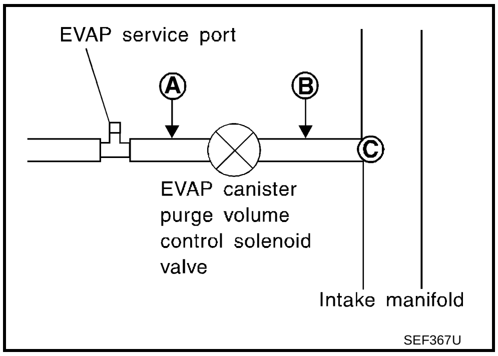

3. Check that air flows freely.

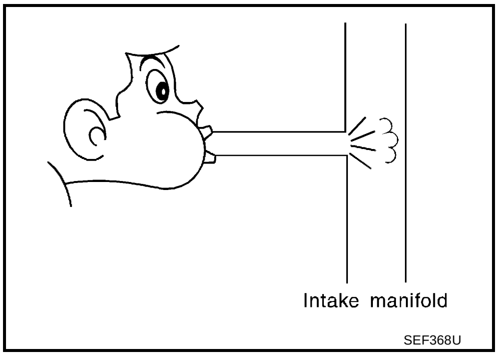

OK or NG

OK (With CONSULT-II)>>GO TO 6.
OK (Without CONSULT-II)>>GO TO 7.
NG >> Repair or clean hoses and/or purge port.

6. CHECK EVAP CANISTER PURGE VOLUME CONTROL SOLENOID VALVE

With CONSULT-II

1. Start engine.
2. Perform “PURG VOL CONT/V” in “ACTIVE TEST” mode with CONSULT-II. Check that engine speed varies according to the valve opening.

ACTIVE TEST	
PURG VOL CONT/V	XXX %
MONITOR	
ENG SPEED	XXX rpm
A/F ALPHA-B1	XXX %

PBIB1786E

OK or NG

OK >> GO TO 8.
NG >> GO TO 7.

7. CHECK EVAP CANISTER PURGE VOLUME CONTROL SOLENOID VALVE

Refer to EC-353, "Component Inspection" .

OK or NG

OK >> GO TO 8.
NG >> Replace EVAP canister purge volume control solenoid valve.

8. CHECK EVAP CONTROL SYSTEM PRESSURE SENSOR CONNECTOR

1. Disconnect EVAP control system pressure sensor harness connector.
2. Check connectors for water.

Water should not exist

OK or NG

OK >> GO TO 9.
NG >> Replace EVAP control system pressure sensor.

9. CHECK EVAP CONTROL SYSTEM PRESSURE SENSOR FUNCTION

Refer to DTC Confirmation Procedure for DTC P0452, EC-366 P0453, EC-373 .

OK or NG

OK >> GO TO 10.
NG >> Replace EVAP control system pressure sensor.

10. CHECK RUBBER TUBE FOR CLOGGING

1. Disconnect rubber tube connected to EVAP canister vent control valve.
2. Check the rubber tube for clogging.

OK or NG

OK >> GO TO 11.
NG >> Clean the rubber tube using an air blower.

11. CHECK EVAP CANISTER VENT CONTROL VALVE

Refer to EC-360, "Component Inspection" .

OK or NG

OK >> GO TO 12.
NG >> Replace EVAP canister vent control valve.

A
EC
C
D
E
F
G
H
I
J
K
L
M

12. CHECK EVAP PURGE LINE

Inspect EVAP purge line (pipe and rubber tube). Check for evidence of leaks.
Refer to EC-31, "EVAPORATIVE EMISSION LINE DRAWING" .

OK or NG

OK >> GO TO 13.
NG >> Replace it.

13. CLEAN EVAP PURGE LINE

Clean EVAP purge line (pipe and rubber tube) using air blower.

>> GO TO 14.

14. CHECK INTERMITTENT INCIDENT

Refer to EC-153, "TROUBLE DIAGNOSIS FOR INTERMITTENT INCIDENT" .

>> **INSPECTION END**

DTC P0442 EVAP CONTROL SYSTEM

PFP:14950

On Board Diagnosis Logic

ABS00CQA

This diagnosis detects leaks in the EVAP purge line using engine intake manifold vacuum.
If pressure does not increase, the ECM will check for leaks in the line between the fuel tank and EVAP canister purge volume control solenoid valve, under the following Vacuum test conditions.
The EVAP canister vent control valve is closed to shut the EVAP purge line off. The EVAP canister purge volume control solenoid valve will then be opened to depressurize the EVAP purge line using intake manifold vacuum. After this occurs, the EVAP canister purge volume control solenoid valve will be closed.

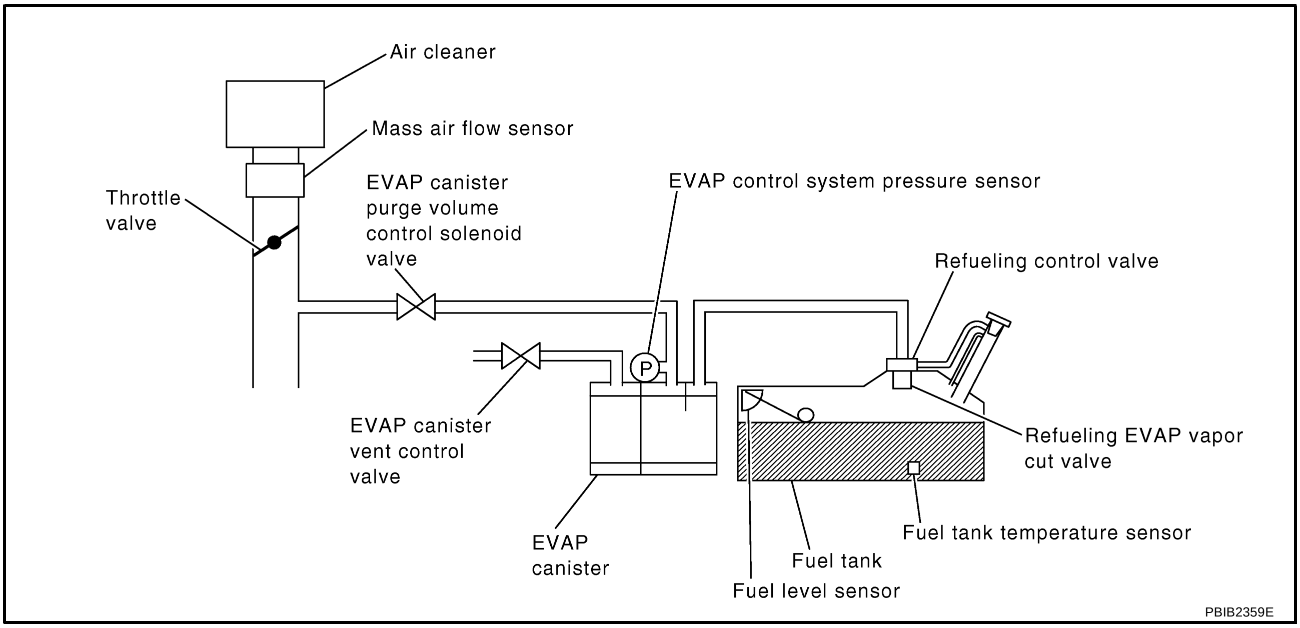

DTC No.	Trouble diagnosis name	DTC detecting condition	Possible cause
P0442 0442	EVAP control system small leak detected (negative pressure)	EVAP control system has a leak, EVAP control system does not operate properly.	● Incorrect fuel tank vacuum relief valve ● Incorrect fuel filler cap used ● Fuel filler cap remains open or fails to close. ● Foreign matter caught in fuel filler cap. ● Leak is in line between intake manifold and EVAP canister purge volume control solenoid valve. ● Foreign matter caught in EVAP canister vent control valve. ● EVAP canister or fuel tank leaks ● EVAP purge line (pipe and rubber tube) leaks ● EVAP purge line rubber tube bent ● Loose or disconnected rubber tube ● EVAP canister vent control valve and the circuit ● EVAP canister purge volume control solenoid valve and the circuit ● Fuel tank temperature sensor ● O-ring of EVAP canister vent control valve is missing or damaged ● Water separator ● EVAP canister is saturated with water ● EVAP control system pressure sensor ● Fuel level sensor and the circuit ● Refueling EVAP vapor cut valve ● Refueling control valve ● ORVR system leaks

CAUTION:

- **Use only a genuine NISSAN fuel filler cap as a replacement. If an incorrect fuel filler cap is used, the MIL may come on.**
- **If the fuel filler cap is not tightened properly, the MIL may come on.**
- **Use only a genuine NISSAN rubber tube as a replacement.**

DTC Confirmation Procedure

ABS00CQB

NOTE:
If DTC Confirmation Procedure has been previously conducted, always turn ignition switch OFF and wait at least 10 seconds before conducting the next test.
TESTING CONDITION:

- **Perform “DTC WORK SUPPORT” when the fuel level is between 1/4 and 3/4 full, and vehicle is placed on flat level surface.**
- **Always perform test at a temperature of 0 to 30°C (32 to 86°F).**

WITH CONSULT-II

1. Turn ignition switch ON.
2. Turn ignition switch OFF and wait at least 10 seconds.

3. Turn ignition switch ON and select “DATA MONITOR” mode with CONSULT-II.
4. Check the following conditions are met.
   COOLAN TEMP/S: 0 - 70°C (32 - 158°F)
   INT/A TEMP SE: 0 - 30°C (32 - 86°F)
5. Select “EVAP SML LEAK P0442/P1442” of “EVAPORATIVE SYSTEM” in “DTC WORK SUPPORT” mode with CONSULT-II.
   Follow the instruction displayed.

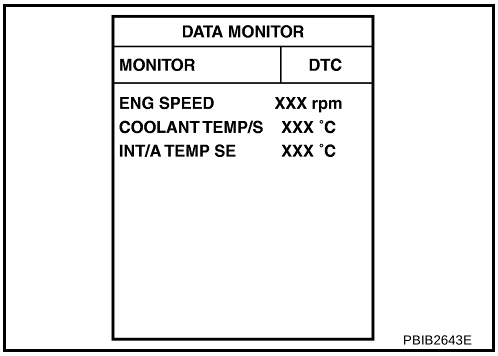

PBIB2643E

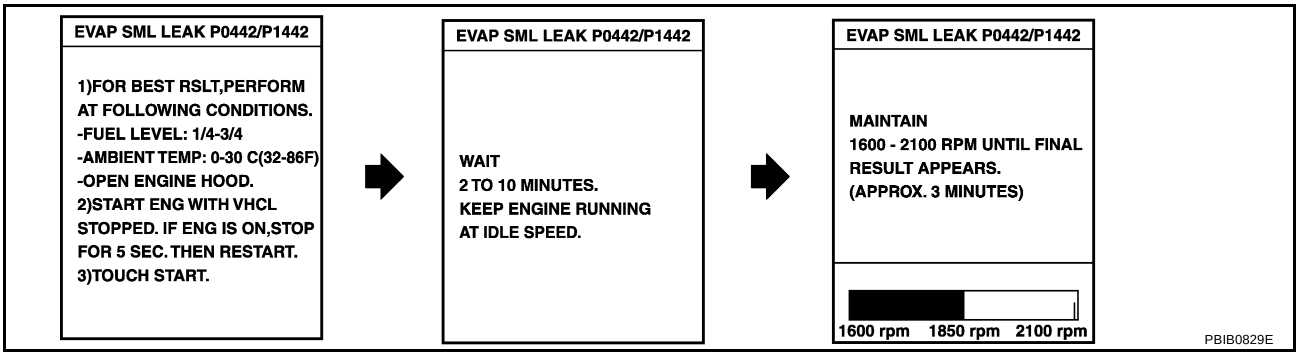

PBIB0829E

NOTE:
If the engine speed cannot be maintained within the range displayed on the CONSULT-II screen, go to EC-70, "Basic Inspection" .

6. Make sure that “OK” is displayed.
   If “NG” is displayed, refer to EC-341, "Diagnostic Procedure" .

   NOTE:
   Make sure that EVAP hoses are connected to the EVAP canister purge volume control solenoid valve properly.

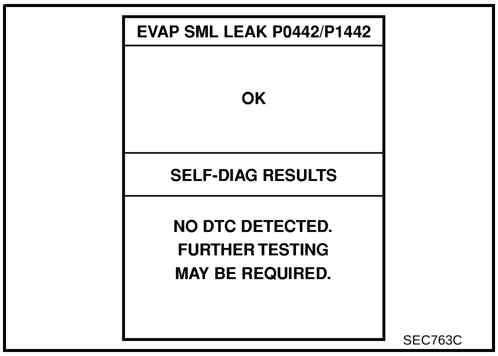

SEC763C

WITH GST

NOTE:
Be sure to read the explanation of EC-57, "Driving Pattern" before driving vehicle.

1. Start engine.
2. Drive vehicle according to EC-57, "Driving Pattern"
3. Stop vehicle.
4. Turn ignition switch OFF, wait at least 10 seconds and then turn ignition switch ON.
5. Select Service $07 with GST.

– If P0442 is displayed on the screen, go to EC-341, "Diagnostic Procedure" .
– If P0441 is displayed on the screen, go to EC-334, "Diagnostic Procedure" for DTC P0441.

Diagnostic Procedure

ABS00CQC

1. CHECK FUEL FILLER CAP DESIGN

1. Turn ignition switch OFF.
2. Check for genuine NISSAN fuel filler cap design.

OK or NG

OK >> GO TO 2.
NG >> Replace with genuine NISSAN fuel filler cap.

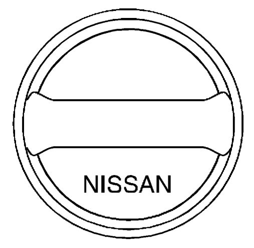

SEF915U

2. CHECK FUEL FILLER CAP INSTALLATION

Check that the cap is tightened properly by rotating the cap clockwise.

OK or NG

OK >> GO TO 3.
NG >> 1. Open fuel filler cap, then clean cap and fuel filler neck threads using air blower.
2. Retighten until racheting sound is heard.

3. CHECK FUEL FILLER CAP FUNCTION

Check for air releasing sound while opening the fuel filler cap.

OK or NG

OK >> GO TO 5.
NG >> GO TO 4.

4. CHECK FUEL TANK VACUUM RELIEF VALVE

Refer to EC-33, "FUEL TANK VACUUM RELIEF VALVE (BUILT INTO FUEL FULLER CAP)" .

OK or NG

OK >> GO TO 5.
NG >> Replace fuel filler cap with a genuine one.

5. INSTALL THE PRESSURE PUMP

To locate the EVAP leak, install EVAP service port adapter and pressure pump to EVAP service port securely. For the location of EVAP service port, refer to EC-31, "EVAPORATIVE EMISSION LINE DRAWING" .

NOTE:

Improper installation of the EVAP service port adapter to the EVAP service port may cause leaking.

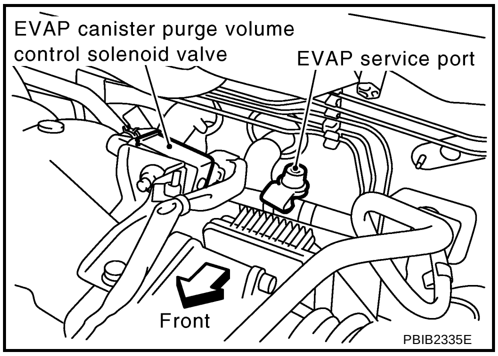

PBIB2335E

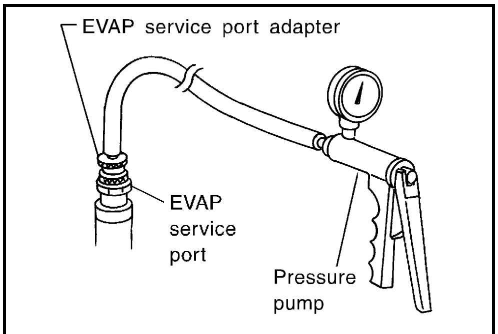

SEF916U

With CONSULT-II>>GO TO 6.
Without CONSULT-II>>GO TO 7.

6. CHECK FOR EVAP LEAK

With CONSULT-II

1. Turn ignition switch ON.
2. Select “EVAP SYSTEM CLOSE” of “WORK SUPPORT” mode with CONSULT-II.
3. Touch “START” and apply pressure into the EVAP line until the pressure indicator reaches the middle of the bar graph.

   CAUTION:
   - **Never use compressed air or a high pressure pump.**
   - **Do not exceed 4.12 kPa (0.042 kg/cm^2 , 0.6 psi) of pressure in the system.**

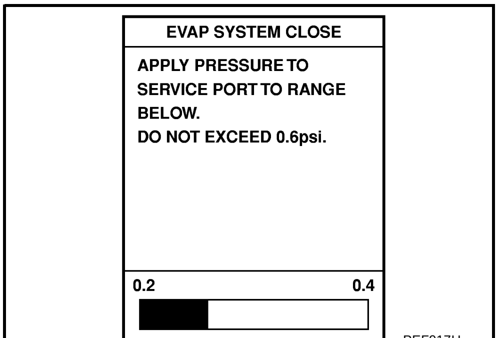

PEF917U

4. Using EVAP leak detector, locate the EVAP leak. For the leak detector, refer to the instruction manual for more details.
   Refer to EC-31, "EVAPORATIVE EMISSION LINE DRAWING" .

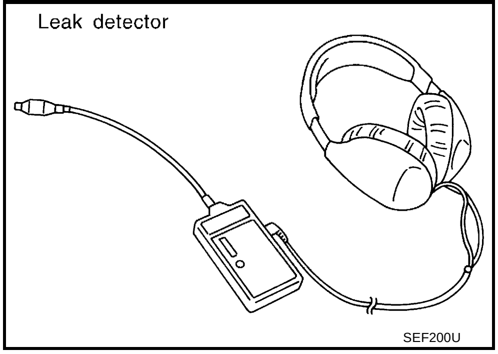

SEF200U

OK or NG

OK >> GO TO 8.
NG >> Repair or replace.

7. CHECK FOR EVAP LEAK

Without CONSULT-II

1. Turn ignition switch OFF.
2. Apply 12 volts DC to EVAP canister vent control valve. The valve will close. (Continue to apply 12 volts until the end of test.)

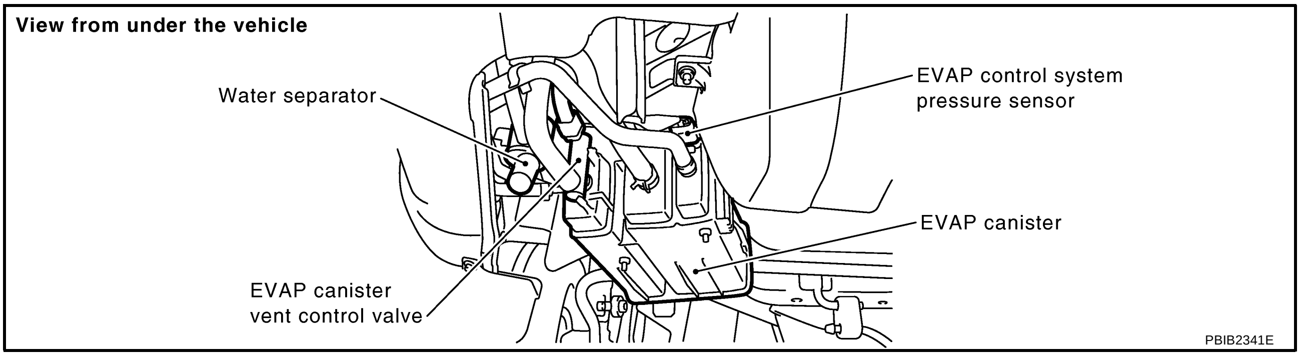

3. Pressurize the EVAP line using pressure pump with 1.3 to 2.7 kPa (10 to 20 mmHg, 0.39 to 0.79 inHg), then remove pump and EVAP service port adapter.

   CAUTION:
   - **Never use compressed air or a high pressure pump.**
   - **Do not exceed 4.12 kPa (0.042 kg/cm^2 , 0.6 psi) of pressure in the system.**

4. Using EVAP leak detector, locate the EVAP leak. For the leak detector, refer to the instruction manual for more details. Refer to EC-31, "EVAPORATIVE EMISSION LINE DRAWING" .

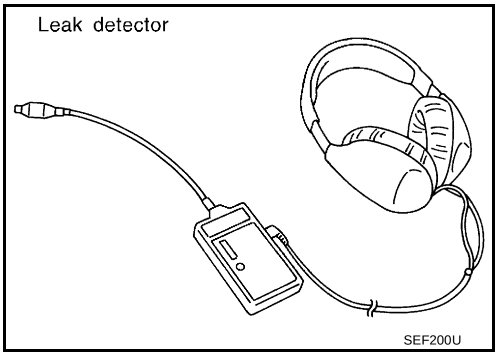

OK or NG

OK >> GO TO 8.
NG >> Repair or replace.

8. CHECK WATER SEPARATOR

Refer to EC-346, "Component Inspection" .

OK or NG

OK >> GO TO 9.
NG >> Clean or replace water separator.

9. CHECK EVAP CANISTER VENT CONTROL VALVE

Check the following,

- EVAP canister vent control valve is installed properly.
  Refer to EC-34, "Removal and Installation" .
- EVAP canister vent control valve.
  Refer toEC-360, "Component Inspection" .

OK or NG

OK >> GO TO 10.
NG >> Repair or replace EVAP canister vent control valve and O-ring.

10. CHECK IF EVAP CANISTER SATURATED WITH WATER

1. Remove EVAP canister with EVAP canister vent control valve and EVAP control system pressure sensor attached.
2. Does water drain from the EVAP canister?

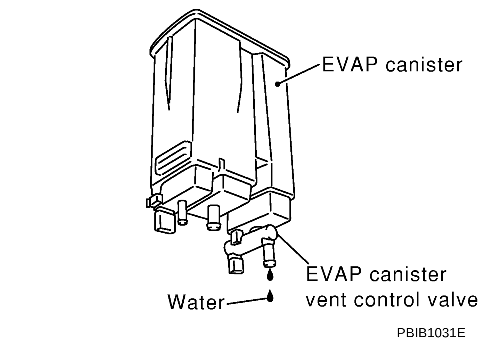

PBIB1031E

Yes or No

Yes >> GO TO 11.
No (With CONSULT-II)>>GO TO 13.
No (Without CONSULT-II)>>GO TO 14.

11. CHECK EVAP CANISTER

Weigh the EVAP canister with the EVAP canister vent control valve and EVAP control system pressure sensor attached.

The weight should be less than 2.5 kg (5.5 lb).

OK or NG

OK (With CONSULT-II)>>GO TO 13.
OK (Without CONSULT-II)>>GO TO 14.
NG >> GO TO 12.

12. DETECT MALFUNCTIONING PART

Check the following.

- EVAP canister for damage
- EVAP hose between EVAP canister and water separator for clogging or poor connection

>> Repair hose or replace EVAP canister.

13. CHECK EVAP CANISTER PURGE VOLUME CONTROL SOLENOID VALVE OPERATION

With CONSULT-II

1. Disconnect vacuum hose to EVAP canister purge volume control solenoid valve at EVAP service port.
2. Start engine.
3. Perform “PURG VOL CONT/V” in “ACTIVE TEST” mode.
4. Touch “Qu” on CONSULT-II screen to increase “PURG VOL CONT/V” opening to 100%.
5. Check vacuum hose for vacuum when revving engine up to 2,000 rpm.

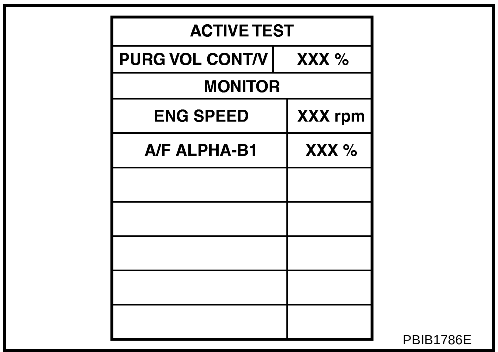

ACTIVE TEST	
PURG VOL CONT/V	XXX %
MONITOR	
ENG SPEED	XXX rpm
A/F ALPHA-B1	XXX %

PBIB1786E

OK or NG

OK >> GO TO 16.
NG >> GO TO 15.

A
EC
C
D
E
F
G
H
I
J
K
L
M

14. CHECK EVAP CANISTER PURGE VOLUME CONTROL SOLENOID VALVE OPERATION

Without CONSULT-II

1. Start engine and warm it up to normal operating temperature.
2. Stop engine.
3. Disconnect vacuum hose to EVAP canister purge volume control solenoid valve at EVAP service port.
4. Start engine and let it idle for at least 80 seconds.
5. Check vacuum hose for vacuum when revving engine up to 2,000 rpm.

OK or NG

OK >> GO TO 17.
NG >> GO TO 15.

15. CHECK VACUUM HOSE

Check vacuum hoses for clogging or disconnection. Refer to EC-31, "EVAPORATIVE EMISSION LINE DRAWING" .

OK or NG

OK >> GO TO 16.
NG >> Repair or reconnect the hose.

16. CHECK EVAP CANISTER PURGE VOLUME CONTROL SOLENOID VALVE

Refer to EC-353, "Component Inspection" .

OK or NG

OK >> GO TO 17.
NG >> Replace EVAP canister purge volume control solenoid valve.

17. CHECK FUEL TANK TEMPERATURE SENSOR

Refer to EC-284, "Component Inspection" .

OK or NG

OK >> GO TO 18.
NG >> Replace fuel level sensor unit.

18. CHECK EVAP CONTROL SYSTEM PRESSURE SENSOR

Refer to EC-371, "Component Inspection" .

OK or NG

OK >> GO TO 19.
NG >> Replace EVAP control system pressure sensor.

19. CHECK EVAP PURGE LINE

Check EVAP purge line (pipe, rubber tube, fuel tank and EVAP canister) for cracks or improper connection.
Refer to EC-30, "EVAPORATIVE EMISSION SYSTEM" .

OK or NG

OK >> GO TO 20.
NG >> Repair or reconnect the hose.

20. CLEAN EVAP PURGE LINE

Clean EVAP purge line (pipe and rubber tube) using air blower.

>> GO TO 21.

21. CHECK EVAP/ORVR LINE

Check EVAP/ORVR line between EVAP canister and fuel tank for clogging, kink, looseness and improper connection. For location, refer to EC-37, "ON BOARD REFUELING VAPOR RECOVERY (ORVR)" .

OK or NG

OK >> GO TO 22.
NG >> Repair or replace hoses and tubes.

22. CHECK SIGNAL LINE AND RECIRCULATION LINE

Check signal line and recirculation line between filler neck tube and fuel tank for clogging, kink, cracks, looseness and improper connection.

OK or NG

OK >> GO TO 23.
NG >> Repair or replace hoses, tubes or filler neck tube.

23. CHECK REFUELING CONTROL VALVE

Refer to EC-41, "Component Inspection" .

OK or NG

OK >> GO TO 24.
NG >> Replace refueling control valve.

24. CHECK REFUELING EVAP VAPOR CUT VALVE

Refer to EC-41, "Component Inspection" .

OK or NG

OK >> GO TO 25.
NG >> Replace refueling EVAP vapor cut valve with fuel tank.

25. CHECK FUEL LEVEL SENSOR

Refer to FL-4, "FUEL LEVEL SENSOR UNIT, FUEL FILTER AND FUEL PUMP ASSEMBLY" .

OK or NG

OK >> GO TO 26.
NG >> Replace fuel level sensor unit.

26. CHECK INTERMITTENT INCIDENT

Refer to EC-153, "TROUBLE DIAGNOSIS FOR INTERMITTENT INCIDENT" .

>> **INSPECTION END**

Component Inspection

ABS00DAY

WATER SEPARATOR

1. Check visually for insect nests in the water separator air inlet.
2. Check visually for cracks or flaws in the appearance.
3. Check visually for cracks or flaws in the hose.

4. Check that **A** and **C** are not clogged by blowing air into **B** with **A** , and then **C** plugged.
5. In case of NG in items 2 - 4, replace the parts.

NOTE:
Do not disassemble water separator.

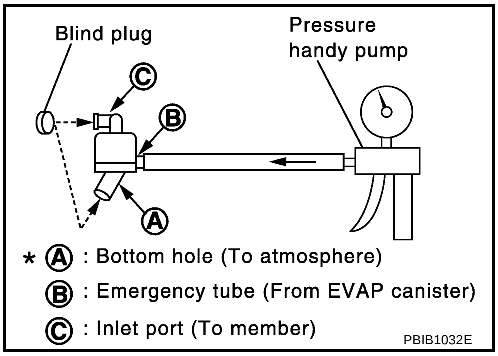

DTC P0444, P0445 EVAP CANISTER PURGE VOLUME CONTROL SOLENOID VALVE

PFP:14920

Description

ABS00CQD

SYSTEM DESCRIPTION

Sensor	Input Signal to ECM	ECM function	Actuator
Crankshaft position sensor (POS) Camshaft position sensor (PHASE)	Engine speed*1	EVAP canister purge flow control	EVAP canister purge volume control solenoid valve
Mass air flow sensor	Amount of intake air		
Engine coolant temperature sensor	Engine coolant temperature		
Battery	Battery voltage*1		
Throttle position sensor	Throttle position		
Accelerator pedal position sensor	Accelerator pedal position		
Heated oxygen sensor 1	Density of oxygen in exhaust gas (Mixture ratio feedback signal)		
Fuel tank temperature sensor	Fuel temperature in fuel tank		
Wheel sensor*2	Vehicle speed		

*1: The ECM determines the start signal status by the signal of engine speed and battery voltage.

*2: This signal is sent to the ECM through CAN communication line.

This system controls flow rate of fuel vapor from the EVAP canister. The opening of the vapor by-pass passage in the EVAP canister purge volume control solenoid valve changes to control the flow rate. The EVAP canister purge volume control solenoid valve repeats ON/OFF operation according to the signal sent from the ECM. The opening of the valve varies for optimum engine control. The optimum value stored in the ECM is determined by considering various engine conditions. When the engine is operating, the flow rate of fuel vapor from the EVAP canister is regulated as the air flow changes.

COMPONENT DESCRIPTION

The EVAP canister purge volume control solenoid valve uses a ON/OFF duty to control the flow rate of fuel vapor from the EVAP canister. The EVAP canister purge volume control solenoid valve is moved by ON/OFF pulses from the ECM. The longer the ON pulse, the greater the amount of fuel vapor that will flow through the valve.

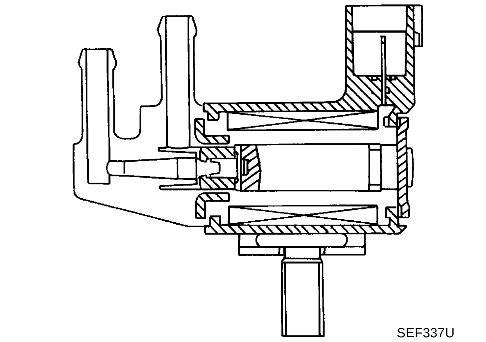

SEF337U

CONSULT-II Reference Value in Data Monitor Mode

ABS00CQE

Specification data are reference values.

MONITOR ITEM	CONDITION		SPECIFICATION
PURG VOL C/V	● Engine: After warming up ● Shift lever: P or N (A/T), Neutral (M/T) ● Air conditioner switch: OFF ● No-load	Idle	0%
		2,000 rpm	20 - 30%

DTC P0444, P0445 EVAP CANISTER PURGE VOLUME CONTROL SOLENOID VALVE

On Board Diagnosis Logic

ABS00CQF

DTC No.	Trouble diagnosis name	DTC detecting condition	Possible cause
P0444 0444	EVAP canister purge volume control solenoid valve circuit open	An excessively low voltage signal is sent to ECM through the valve	• Harness or connectors (The solenoid valve circuit is open or shorted.) • EVAP canister purge volume control solenoid valve
P0445 0445	EVAP canister purge volume control solenoid valve circuit shorted	An excessively high voltage signal is sent to ECM through the valve	• Harness or connectors (The solenoid valve circuit is shorted.) • EVAP canister purge volume control solenoid valve

DTC Confirmation Procedure

ABS00CQG

NOTE:
If DTC Confirmation Procedure has been previously conducted, always turn ignition switch OFF and wait at least 10 seconds before conducting the next test.
TESTING CONDITION:
Before performing the following procedure, confirm battery voltage is more than 11V at idle.

WITH CONSULT-II

1. Turn ignition switch ON.
2. Select “DATA MONITOR” mode with CONSULT-II.
3. Start engine and let it idle for at least 13 seconds.
4. If 1st trip DTC is detected, go to EC-352, "Diagnostic Procedure" .

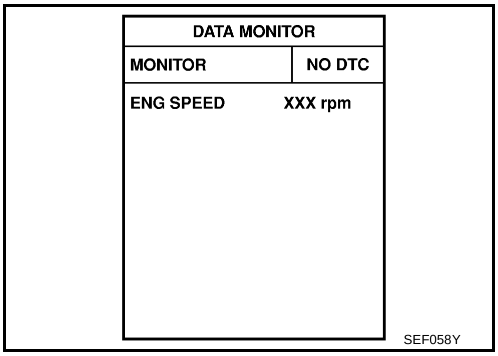

WITH GST

Follow the procedure “WITH CONSULT-II” above.

Wiring Diagram

ABS00CQH

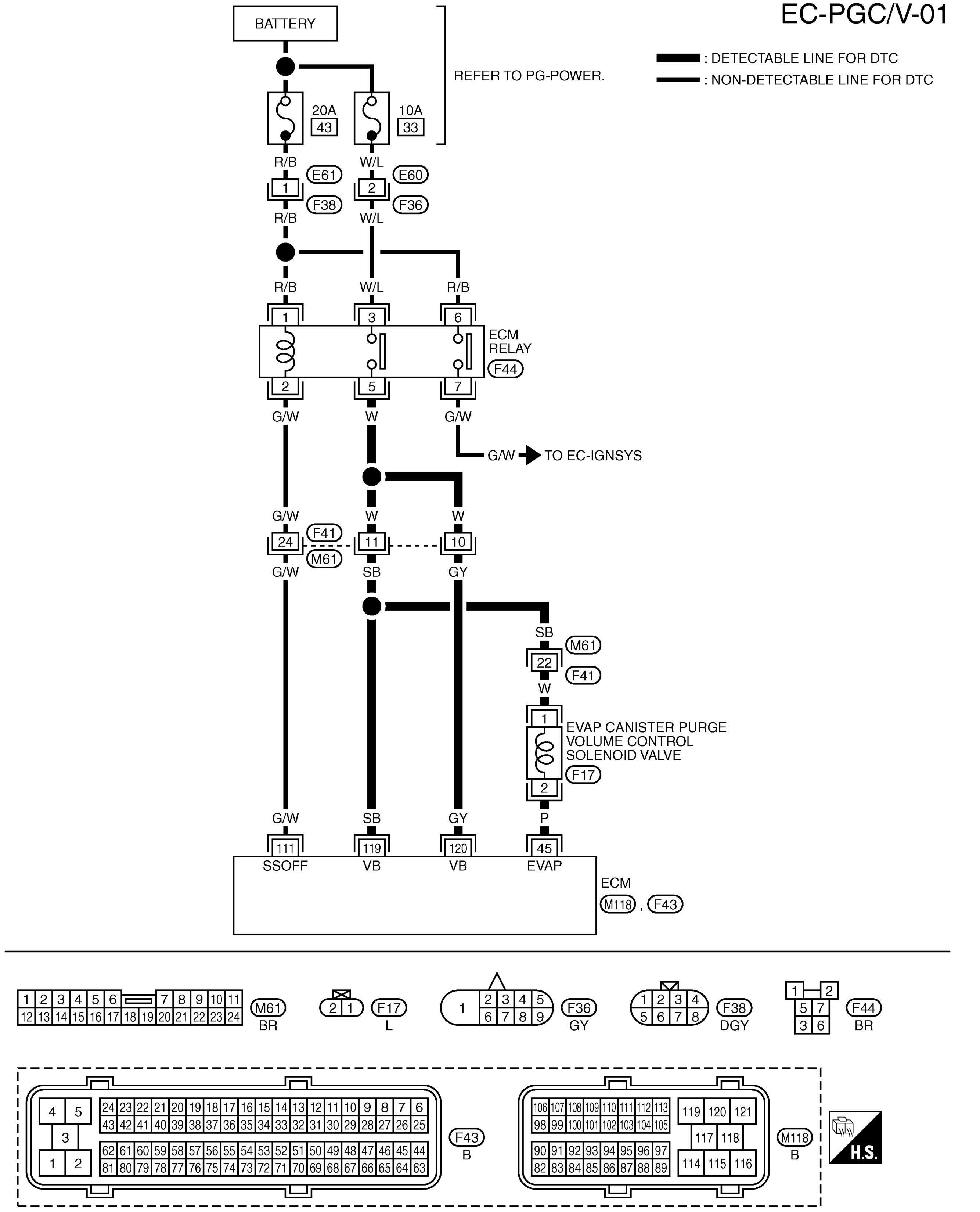

TBWB0123E

Specification data are reference values and are measured between each terminal and ground.
Pulse signal is measured by CONSULT-II.

CAUTION:

Do not use ECM ground terminals when measuring input/output voltage. Doing so may result in damage to the ECM's transistor. Use a ground other than ECM terminals, such as the ground.

TERMINAL NO.	WIRE COLOR	ITEM	CONDITION	DATA (DC Voltage)
45	P	EVAP canister purge volume control solenoid valve	**[Engine is running]** ● Idle speed	BATTERY VOLTAGE (11 - 14V)★ 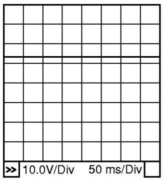 PBIB0050E
			[Engine is running] ● Engine speed is about 2,000 rpm (More than 100 seconds after starting engine)	Approximately 10V★ 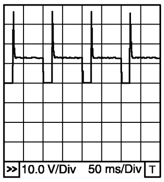 PBIB0520E
111	G/W	ECM relay (Self shut-off)	**[Engine is running]** **[Ignition switch: OFF]** ● A few seconds after turning ignition switch OFF	0 - 1.0V
			[Ignition switch: OFF] ● More than a few seconds after turning ignition switch OFF	BATTERY VOLTAGE (11 - 14V)
119 120	SB GY	Power supply for ECM	**[Ignition switch: ON]**	BATTERY VOLTAGE (11 - 14V)

★: Average voltage for pulse signal (Actual pulse signal can be confirmed by oscilloscope.)

Diagnostic Procedure

ABS00D8G

1. CHECK EVAP CANISTER PURGE VOLUME CONTROL SOLENOID VALVE POWER SUPPLY CIRCUIT

1. Turn ignition switch OFF.
2. Disconnect EVAP canister purge volume control solenoid valve harness connector.
3. Turn ignition switch ON.

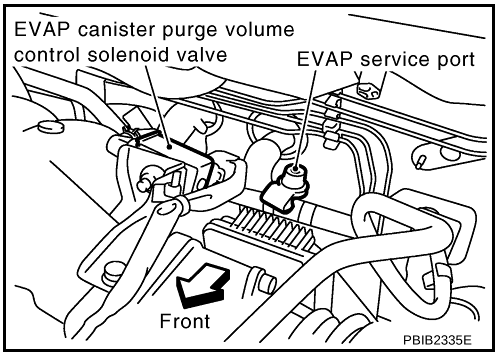

4. Check voltage between EVAP canister purge volume control solenoid valve terminal 1 and ground with CONSULT-II or tester.

Voltage: Battery voltage

OK or NG

OK >> GO TO 3.
NG >> GO TO 2.

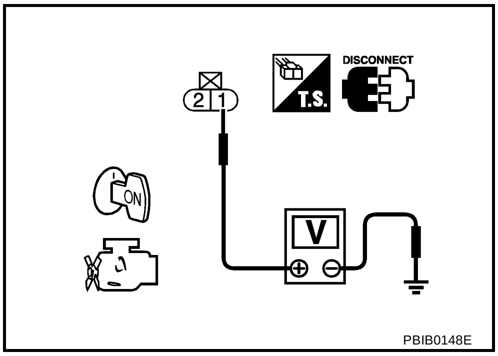

2. DETECT MALFUNCTIONING PART

Check the following.

- Harness connectors M61, F41
- Harness for open or short between EVAP canister purge volume control solenoid valve and ECM relay.
- Harness for open or short between EVAP canister purge volume control solenoid valve and ECM

>> Repair open circuit or short to ground or short to power in harness or connectors.

3. CHECK EVAP CANISTER PURGE VOLUME CONTROL SOLENOID VALVE OUTPUT SIGNAL CIRCUIT FOR OPEN AND SHORT

1. Turn ignition switch OFF.
2. Disconnect ECM harness connector.
3. Check harness continuity between EVAP canister purge volume control solenoid valve terminal 2 and ECM terminal 45. Refer to Wiring Diagram.

Continuity should exist.

4. Also check harness for short to ground and short to power.

OK or NG

OK (With CONSULT-II)>>GO TO 4.
OK (Without CONSULT-II)>>GO TO 5.
NG >> Repair open circuit or short to ground and short to power in harness or connectors.

4. CHECK EVAP CANISTER PURGE VOLUME CONTROL SOLENOID VALVE OPERATION

With CONSULT-II

1. Reconnect all harness connectors disconnected.
2. Start engine.
3. Perform “PURG VOL CONT/V” in “ACTIVE TEST” mode with CONSULT-II. Check that engine speed varies according to the valve opening.

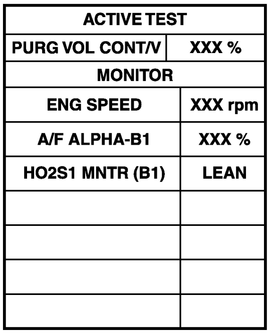

PBIB0569E

OK or NG

OK >> GO TO 6.
NG >> GO TO 5.

5. CHECK EVAP CANISTER PURGE VOLUME CONTROL SOLENOID VALVE

Refer to EC-353, "Component Inspection" .

OK or NG

OK >> GO TO 6.
NG >> Replace EVAP canister purge volume control solenoid valve.

6. CHECK INTERMITTENT INCIDENT

Refer to EC-153, "TROUBLE DIAGNOSIS FOR INTERMITTENT INCIDENT" .

>> **INSPECTION END**

Component Inspection

ABS00CQJ

EVAP CANISTER PURGE VOLUME CONTROL SOLENOID VALVE

With CONSULT-II

Check air passage continuity of EVAP canister purge volume control solenoid valve under the following conditions.

Condition (PURG VOL CONT/V value)	Air passage continuity between A and B
100%	Yes
0%	No

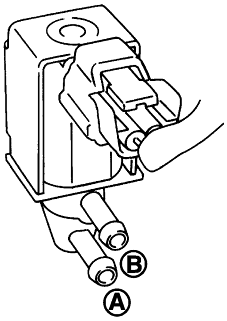

PBIB0149E

Without CONSULT-II

Check air passage continuity of EVAP canister purge volume control solenoid valve under the following conditions.

Condition	Air passage continuity between A and B
12V direct current supply between terminals 1 and 2	Yes
No supply	No

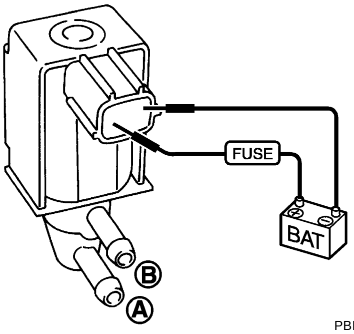

PBIB0150E

Removal and Installation

ABS00CQK

EVAP CANISTER PURGE VOLUME CONTROL SOLENOID VALVE

Refer to EM-16, "INTAKE MANIFOLD" .

DTC P0447 EVAP CANISTER VENT CONTROL VALVE

PFP:14935

A
EC
C
D
E
F
G
H
I
J
K
L
M

Component Description

ABS00CQL

The EVAP canister vent control valve is located on the EVAP canister and is used to seal the canister vent.
This solenoid valve responds to signals from the ECM. When the ECM sends an ON signal, the coil in the solenoid valve is energized. A plunger will then move to seal the canister vent. The ability to seal the vent is necessary for the on board diagnosis of other evaporative emission control system components.
This solenoid valve is used only for diagnosis, and usually remains opened.
When the vent is closed, under normal purge conditions, the evaporative emission control system is depressurized and allows EVAP Control System diagnoses.

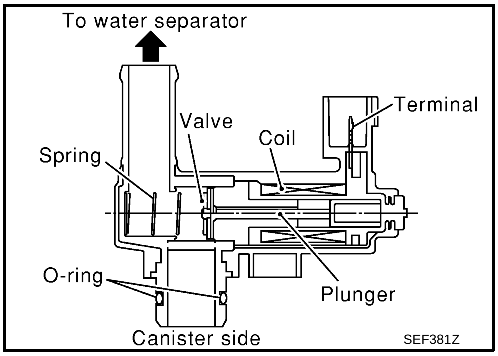

SEF381Z

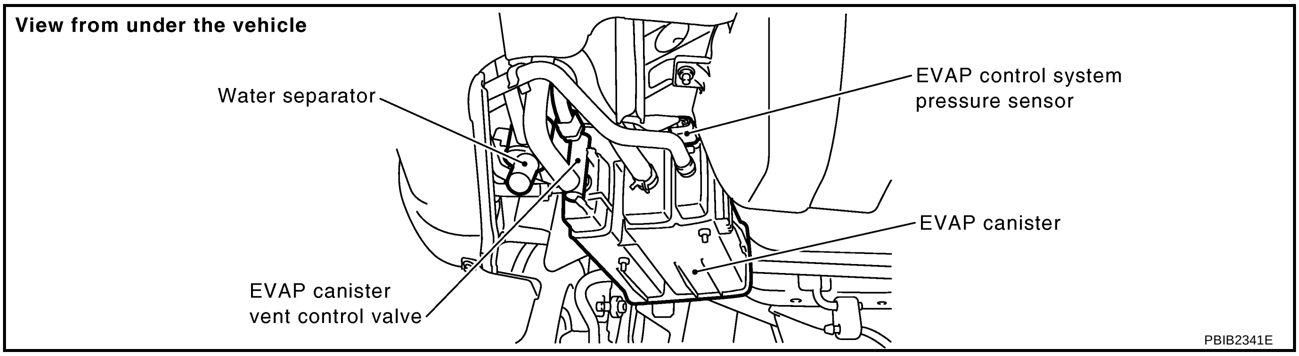

PBIB2341E

CONSULT-II Reference Value in Data Monitor Mode

ABS00CQM

Specification data are reference values.

MONITOR ITEM	CONDITION	SPECIFICATION
VENT CONT/V	● Ignition switch: ON	OFF

On Board Diagnosis Logic

ABS00CQN

DTC No.	Trouble diagnosis name	DTC detecting condition	Possible cause
P0447 0447	EVAP canister vent control valve circuit open	An improper voltage signal is sent to ECM through EVAP canister vent control valve.	● Harness or connectors (The valve circuit is open or shorted.) ● EVAP canister vent control valve

DTC Confirmation Procedure

ABS00CQO

NOTE:
If DTC Confirmation Procedure has been previously conducted, always turn ignition switch OFF and wait at least 10 seconds before conducting the next test.
TESTING CONDITION:
Before performing the following procedure, confirm battery voltage is more than 11V at idle.

WITH CONSULT-II

1. Turn ignition switch ON.

2. Select “DATA MONITOR” mode with CONSULT-II.
3. Start engine and wait at least 8 seconds.
4. If 1st trip DTC is detected, go to EC-358, "Diagnostic Procedure"
   .

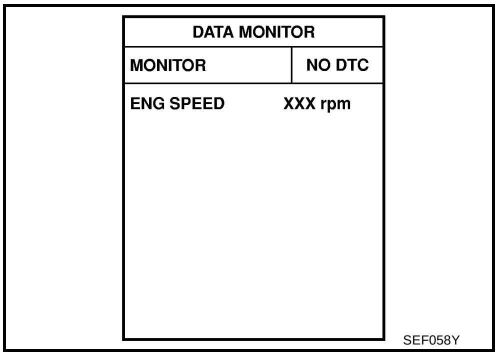

WITH GST

Follow the procedure “WITH CONSULT-II” above.

Wiring Diagram

ABS00CQP

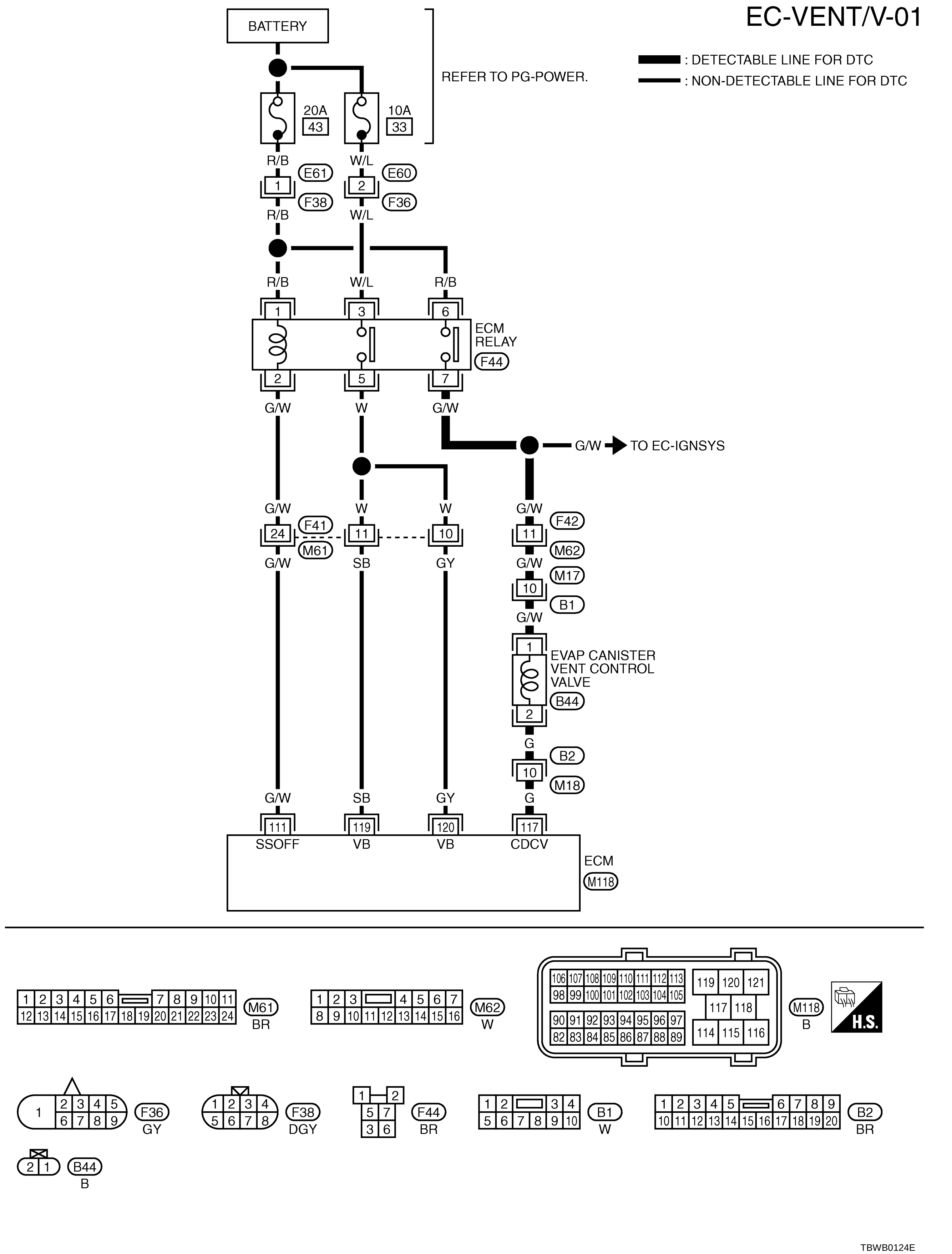

A
EC
C
D
E
F
G
H
I
J
K
L
M

Specification data are reference values and are measured between each terminal and ground.

CAUTION:

Do not use ECM ground terminals when measuring input/output voltage. Doing so may result in damage to the ECM's transistor. Use a ground other than ECM terminals, such as the ground.

TERMINAL NO.	WIRE COLOR	ITEM	CONDITION	DATA (DC Voltage)
111	G/W	ECM relay (Self shut-off)	**[Engine is running]** **[Ignition switch: OFF]** • A few seconds after turning ignition switch OFF	0 - 1.0V
			[Ignition switch: OFF] • More than a few seconds after turning ignition switch OFF	BATTERY VOLTAGE (11 - 14V)
117	G	EVAP canister vent control valve	**[Ignition switch: ON]**	BATTERY VOLTAGE (11 - 14V)
119 120	SB GY	Power supply for ECM	**[Ignition switch: ON]**	BATTERY VOLTAGE (11 - 14V)

Diagnostic Procedure

ABS00CQQ

1. INSPECTION START

1. Do you have CONSULT-II?

Yes or No

Yes >> GO TO 2.

No >> GO TO 3.

2. CHECK EVAP CANISTER VENT CONTROL VALVE CIRCUIT

With CONSULT-II

1. Turn ignition switch OFF and then turn ON.
2. Select “VENT CONTROL/V” in “ACTIVE TEST” mode with CONSULT-II.
3. Touch “ON/OFF” on CONSULT-II screen.
4. Check for operating sound of the valve.
   Clicking noise should be heard.

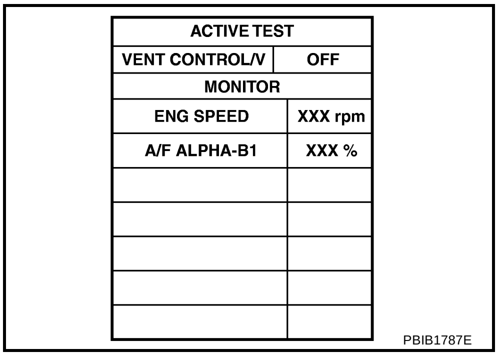

OK or NG

OK >> GO TO 7.

NG >> GO TO 3.

3. CHECK EVAP CANISTER VENT CONTROL VALVE POWER SUPPLY CIRCUIT

1. Turn ignition switch OFF.
2. Disconnect EVAP canister vent control valve harness connector.

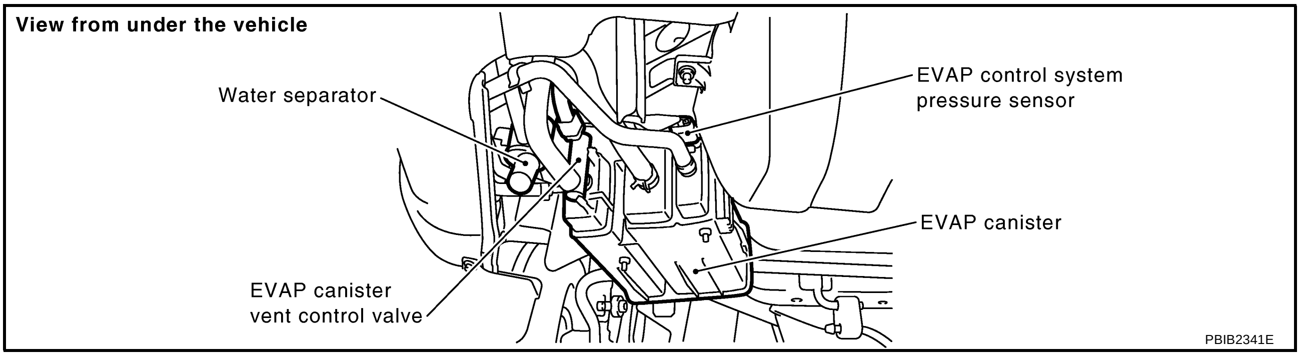

3. Turn ignition switch ON.
4. Check voltage between EVAP canister vent control valve terminal 1 and ground with CONSULT-II or tester.

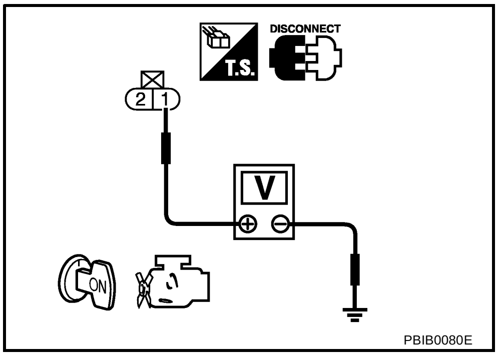

Voltage: Battery voltage

OK or NG

OK >> GO TO 5.
NG >> GO TO 4.

4. DETECT MALFUNCTIONING PART

Check the following.

- Harness connectors F42, M62
- Harness connectors M17, B1
- Harness for open or short between EVAP canister vent control valve and ECM relay

>> Repair open circuit or short to ground or short to power in harness or connectors.

5. CHECK EVAP CANISTER VENT CONTROL VALVE OUTPUT SIGNAL CIRCUIT FOR OPEN AND SHORT

1. Turn ignition switch OFF.
2. Disconnect ECM harness connector.
3. Check harness continuity between ECM terminal 117 and EVAP canister vent control valve terminal 2. Refer to Wiring Diagram.

Continuity should exist.

4. Also check harness for short to ground and short to power.

OK or NG

OK >> GO TO 7.
NG >> GO TO 6.

6. DETECT MALFUNCTIONING PART

Check the following.

- Harness connectors B2, M118
- Harness for open or short between EVAP canister vent control valve and ECM

>> Repair open circuit or short to ground or short to power in harness or connectors.

7. CHECK RUBBER TUBE FOR CLOGGING

1. Disconnect rubber tube connected to EVAP canister vent control valve.
2. Check the rubber tube for clogging.

OK or NG

OK >> GO TO 8.
NG >> Clean the rubber tube using an air blower.

8. CHECK EVAP CANISTER VENT CONTROL VALVE

Refer to EC-360, "Component Inspection" .

OK or NG

OK >> GO TO 9.
NG >> Replace EVAP canister vent control valve.

9. CHECK INTERMITTENT INCIDENT

Refer to EC-153, "TROUBLE DIAGNOSIS FOR INTERMITTENT INCIDENT" .

>> **INSPECTION END**

Component Inspection

ABS00CQR

EVAP CANISTER VENT CONTROL VALVE

With CONSULT-II

1. Remove EVAP canister vent control valve from EVAP canister.
2. Check portion **B** of EVAP canister vent control valve for being rusted.
   If NG, replace EVAP canister vent control valve.
   If OK, go to next step.
3. Reconnect harness connectors disconnected.
4. Turn ignition switch ON.

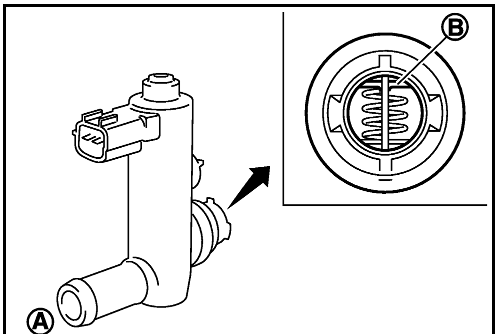

PBIB1033E

5. Perform “VENT CONTROL/V” in “ACTIVE TEST” mode.
6. Check air passage continuity and operation delay time.
   Make sure new O-ring is installed properly.

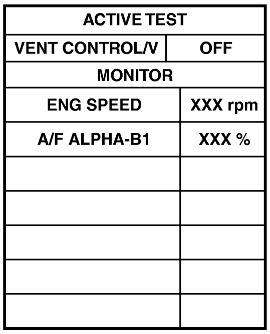

PBIB1787E

Condition VENT CONTROL/V	Air passage continuity between A and B
ON	No
OFF	Yes

Operation takes less than 1 second.

If NG, replace EVAP canister vent control valve.
If OK, go to next step.

7. Clean the air passage (Portion **A** to **B**) of EVAP canister vent control valve using an air blower.
8. Perform step 6 again.

Without CONSULT-II

1. Remove EVAP canister vent control valve from EVAP canister.
2. Check portion **B** of EVAP canister vent control valve for being rusted.

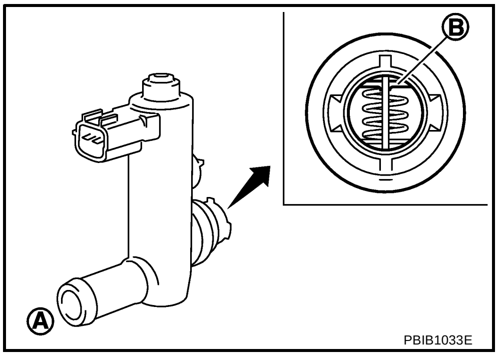

PBIB1033E

3. Check air passage continuity and operation delay time under the following conditions.
Make sure new O-ring is installed properly.

Condition	Air passage continuity between A and B
12V direct current supply between terminals 1 and 2	No
OFF	Yes

Operation takes less than 1 second.

If NG, replace EVAP canister vent control valve.
If OK, go to next step.

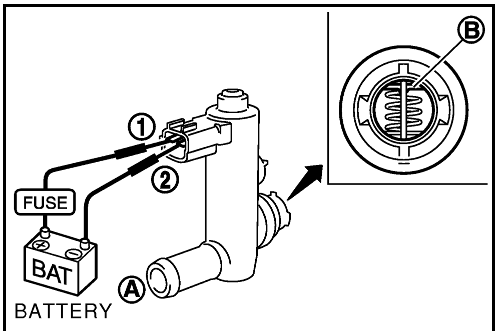

PBIB1034E

4. Clean the air passage (Portion **A** to **B**) of EVAP canister vent control valve using an air blower.
5. Perform step 3 again.

DTC P0451 EVAP CONTROL SYSTEM PRESSURE SENSOR

PFP:22365

Component Description

ABS00CQS

The EVAP control system pressure sensor detects pressure in the purge line. The sensor output voltage to the ECM increases as pressure increases.

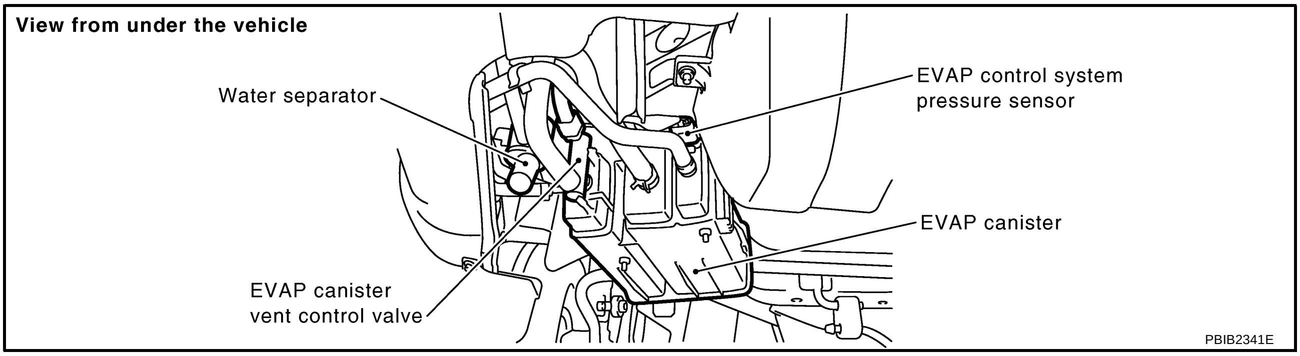

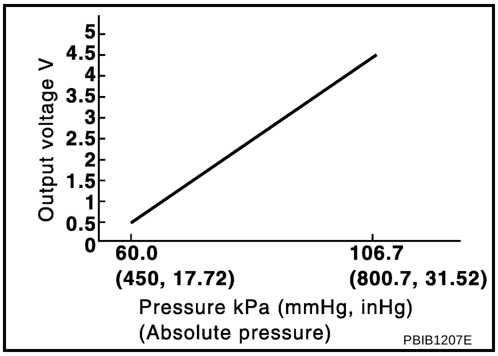

CONSULT-II Reference Value in Data Monitor Mode

ABS00CQT

Specification data are reference values.

MONITOR ITEM	CONDITION	SPECIFICATION
EVAP SYS PRES	● Ignition switch: ON	Approx. 1.8 - 4.8V

On Board Diagnosis Logic

ABS00CQU

NOTE:
If DTC P0451 is displayed with DTC P1229, first perform the trouble diagnosis for DTC P1229. Refer to **EC-499** .

DTC No.	Trouble diagnosis name	DTC detecting condition	Possible cause
P0451 0451	EVAP control system pressure sensor performance	ECM detects a sloshing signal from the EVAP control system pressure sensor	● Harness or connectors ● EVAP control system pressure sensor

DTC Confirmation Procedure

ABS00CQV

NOTE:
If DTC Confirmation Procedure has been previously conducted, always turn ignition switch OFF and wait at least 10 seconds before conducting the next test.

WITH CONSULT-II

1. Turn ignition switch OFF and wait at least 10 seconds.
2. Turn ignition switch ON and select “DATA MONITOR” mode with CONSULT-II.
3. Start engine and wait at least 40 seconds.

   NOTE:
   Do not depress accelerator pedal even slightly.
   If 1st trip DTC is detected, go to EC-363, "Diagnostic Procedure" .

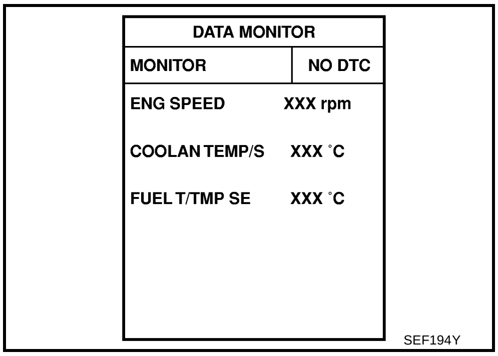

WITH GST

Follow the procedure “WITH CONSULT-II” above.

Diagnostic Procedure

ABS00CQW

1. CHECK GROUND CONNECTIONS

1. Turn ignition switch OFF.
2. Loosen and retighten three ground screws on the body. Refer to EC-161, "Ground Inspection" .

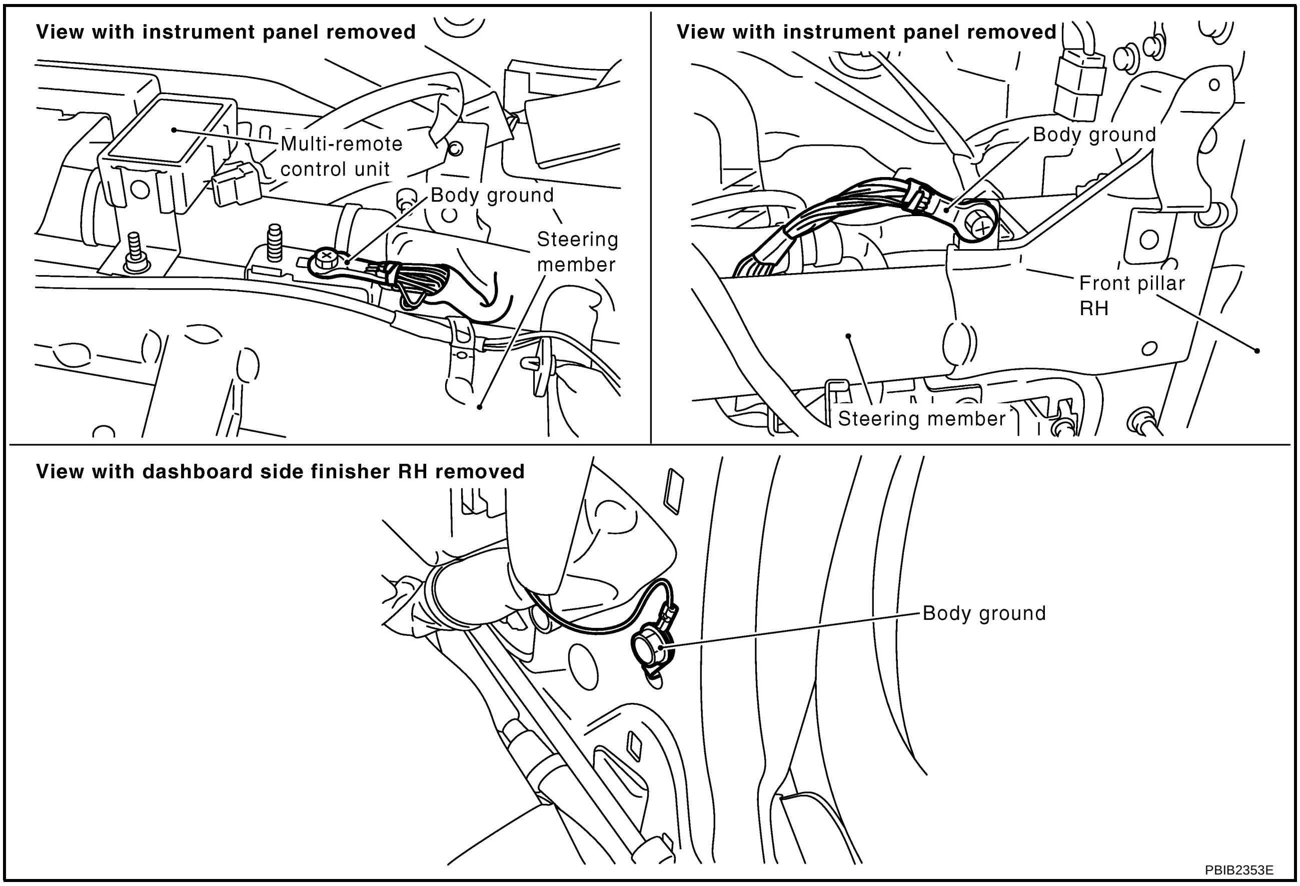

OK or NG

OK >> GO TO 2.
NG >> Repair or replace ground connections.

2. CHECK EVAP CONTROL SYSTEM PRESSURE SENSOR CONNECTOR FOR WATER

1. Disconnect EVAP control system pressure sensor harness connector.

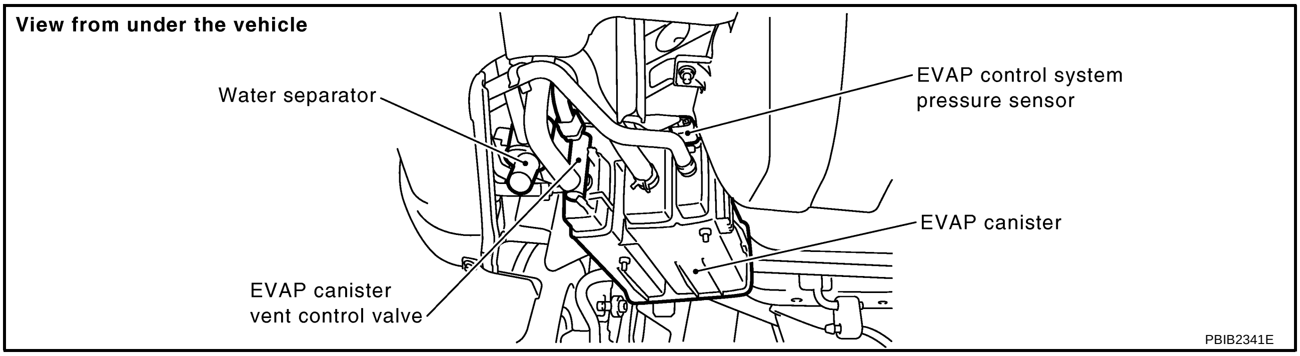

2. Check sensor harness connector for water.

Water should not exist.

OK or NG

OK >> GO TO 3.
NG >> Repair or replace harness connector.

3. CHECK EVAP CONTROL SYSTEM PRESSURE SENSOR

Refer to EC-364, "Component Inspection" .

OK or NG

OK >> GO TO 4.
NG >> Replace EVAP control system pressure sensor.

4. CHECK INTERMITTENT INCIDENT

Refer to EC-153, "TROUBLE DIAGNOSIS FOR INTERMITTENT INCIDENT" .
For wiring diagram, refer to EC-367 .

>> **INSPECTION END**

Component Inspection

ABS00CQX

EVAP CONTROL SYSTEM PRESSURE SENSOR

1. Remove EVAP control system pressure sensor with its harness connector connected from EVAP canister.
   Always replace O-ring with a new one.
2. Install a vacuum pump to EVAP control system pressure sensor.
3. Turn ignition switch ON and check output voltage between ECM terminal 32 and ground under the following conditions.

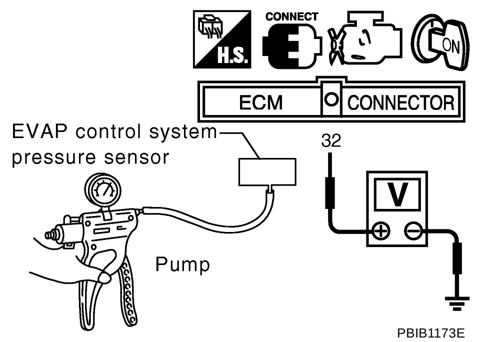

Applied vacuum kPa (mmHg, inHg)	Voltage V
Not applied	1.8 - 4.8
-26.7 (-200, -7.87)	2.1 to 2.5V lower than above value

CAUTION:

- **Always calibrate the vacuum pump gauge when using it.**
- **Do not apply below -93.3 kPa (-700 mmHg, -27.56 inHg) or pressure over 101.3 kPa (760 mmHg, 29.92 inHg).**

4. If NG, replace EVAP control system pressure sensor.

DTC P0452 EVAP CONTROL SYSTEM PRESSURE SENSOR

PFP:25085

Component Description

ABS00CQY

The EVAP control system pressure sensor detects pressure in the purge line. The sensor output voltage to the ECM increases as pressure increases.

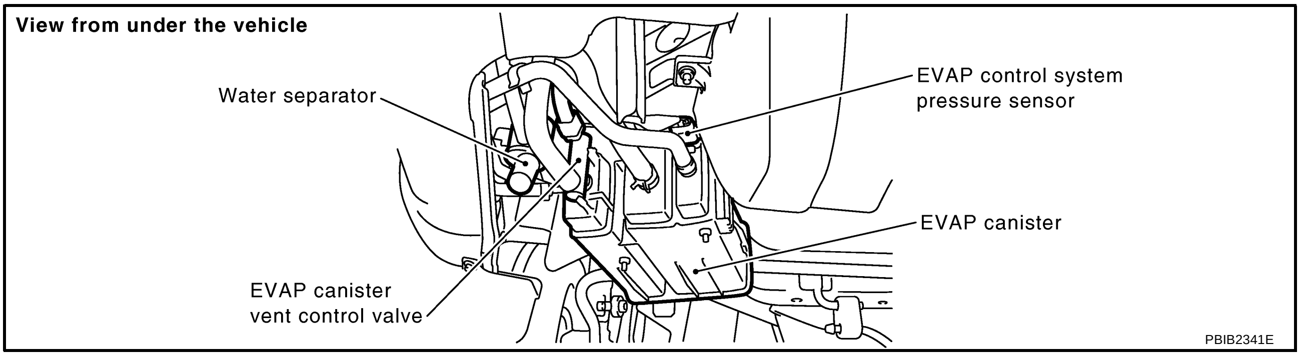

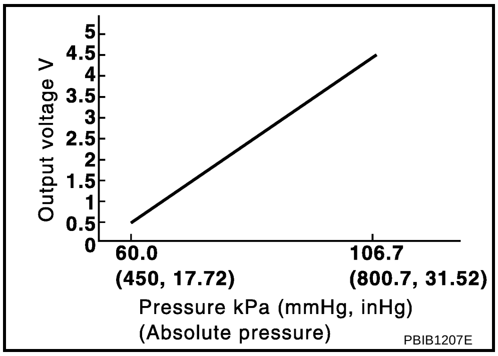

CONSULT-II Reference Value in Data Monitor Mode

ABS00CQZ

Specification data are reference values.

MONITOR ITEM	CONDITION	SPECIFICATION
EVAP SYS PRES	● Ignition switch: ON	Approx. 1.8 - 4.8V

On Board Diagnosis Logic

ABS00CR0

NOTE:
If DTC P0452 is displayed with DTC P1229, first perform the trouble diagnosis for DTC P1229. Refer to **EC-499 .**

DTC No.	Trouble diagnosis name	DTC detecting condition	Possible cause
P0452 0452	EVAP control system pressure sensor low input	An excessively low voltage from the sensor is sent to ECM.	● Harness or connectors (The sensor circuit is open or shorted.) ● EVAP control system pressure sensor

DTC Confirmation Procedure

ABS00CR1

NOTE:
If DTC Confirmation Procedure has been previously conducted, always turn ignition switch OFF and wait at least 10 seconds before conducting the next test.
TESTING CONDITION:
Always perform test at a temperature of 5°C (41°F) or more.

WITH CONSULT-II

1. Start engine and warm it up to normal operating temperature.
2. Turn ignition switch OFF and wait at least 10 seconds.
3. Turn ignition switch ON.
4. Select “DATA MONITOR” mode with CONSULT-II.
5. Make sure that “FUEL T/TEMP SE” is more than 0°C (32°F).
6. Start engine and wait at least 20 seconds.
   If 1st trip DTC is detected, go to EC-368, "Diagnostic Procedure"
   .

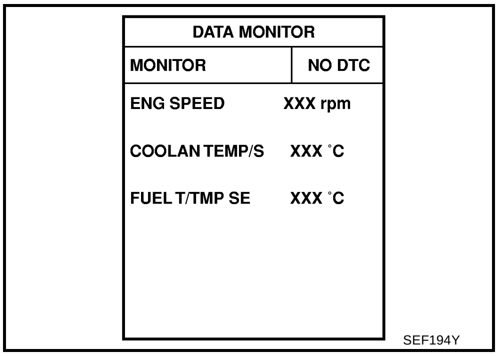

SEF194Y

WITH GST

1. Start engine and warm it up to normal operating temperature.
2. Check that voltage between ECM terminal 107 (Fuel tank temperature sensor signal) and ground is less than 4.2V.
3. Turn ignition switch OFF and wait at least 10 seconds.
4. Start engine and wait at least 20 seconds.
5. Select Service $07 with GST.
   If 1st trip DTC is detected, go to EC-368, "Diagnostic Procedure"
   .

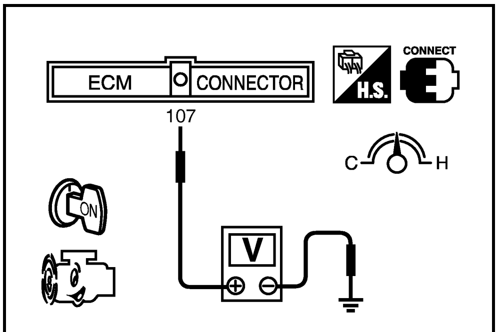

PBIB1199E

Wiring Diagram

ABS00CR2

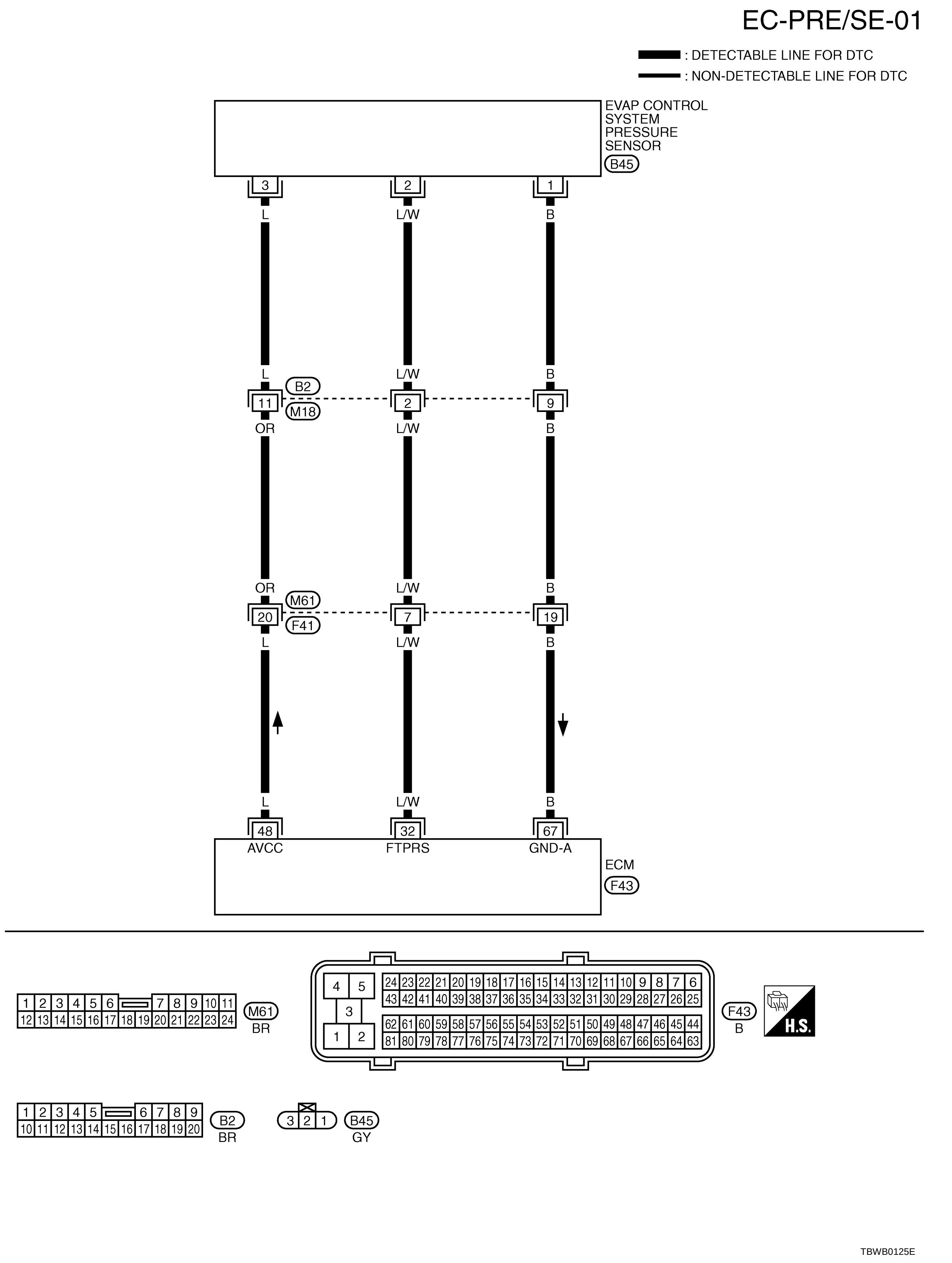

Specification data are reference values and are measured between each terminal and ground.

CAUTION:

Do not use ECM ground terminals when measuring input/output voltage. Doing so may result in damage to the ECM's transistor. Use a ground other than ECM terminals, such as the ground.

TERMINAL NO.	WIRE COLOR	ITEM	CONDITION	DATA (DC Voltage)
32	L/W	EVAP control system pressure sensor	**[Ignition switch: ON]**	Approximately 1.8 - 4.8V
48	L	Sensor power supply (EVAP control system pressure sensor)	**[Ignition switch: ON]**	Approximately 5V
67	B	Sensor ground	**[Engine is running]** ● **Warm-up condition** ● Idle speed	Approximately 0V

Diagnostic Procedure

ABS00CR3

1. CHECK GROUND CONNECTIONS

1. Turn ignition switch OFF.
2. Loosen and retighten three ground screws on the body. Refer to EC-161, "Ground Inspection" .

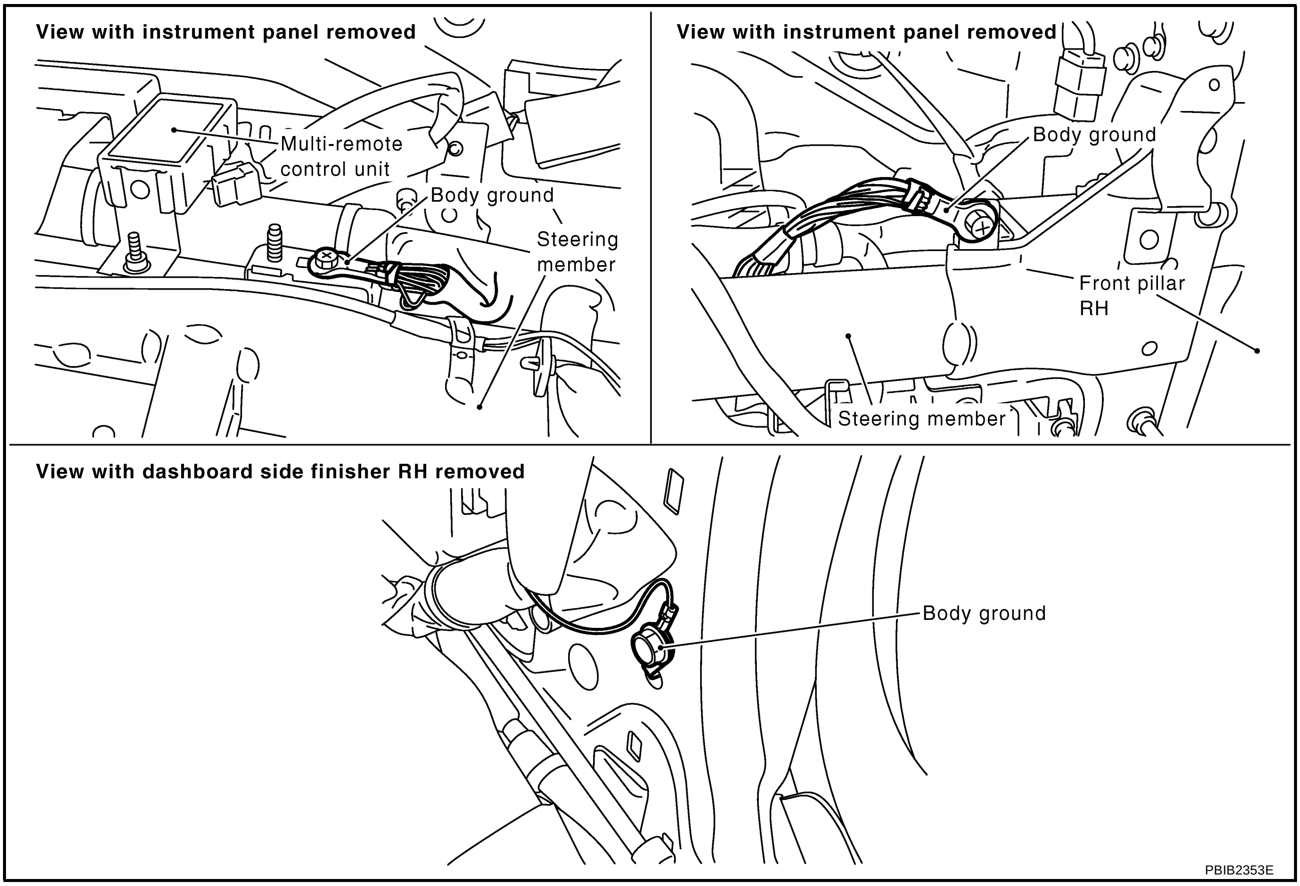

OK or NG

OK >> GO TO 2.

NG >> Repair or replace ground connections.

2. CHECK CONNECTOR

1. Disconnect EVAP control system pressure sensor harness connector.

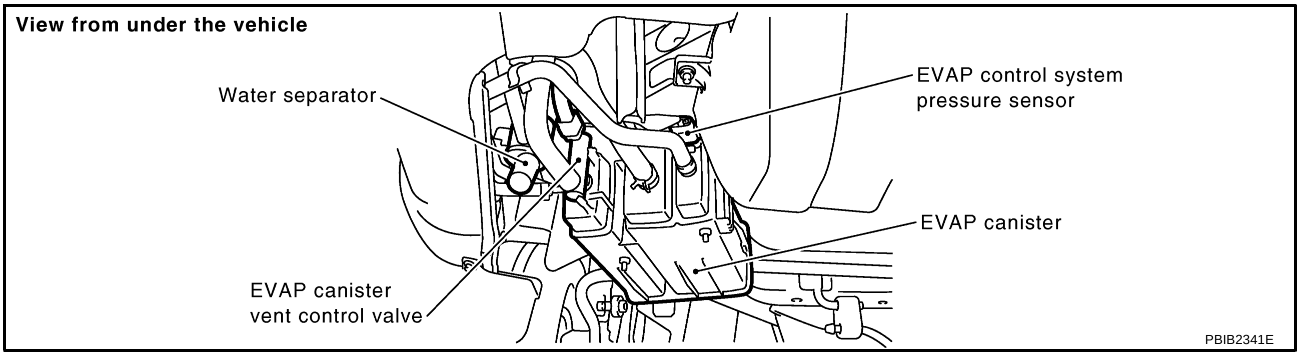

2. Check sensor harness connector for water.

Water should not exist.

OK or NG

OK >> GO TO 3.
NG >> Repair or replace harness connector.

3. CHECK EVAP CONTROL SYSTEM PRESSURE SENSOR POWER SUPPLY CIRCUIT

1. Turn ignition switch ON.
2. Check voltage between EVAP control system pressure sensor terminal 3 and ground with CONSULT-II or tester.

Voltage: Approximately 5V

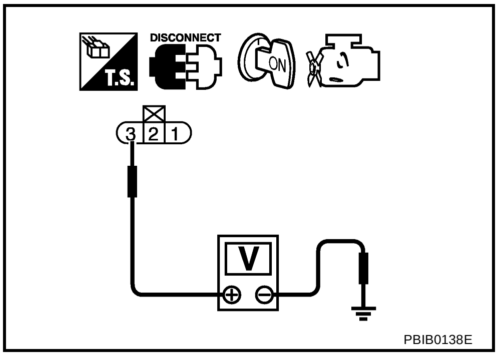

OK or NG

OK >> GO TO 5.
NG >> GO TO 4.

4. DETECT MALFUNCTIONING PART

Check the following.

- Harness connectors F41, M61
- Harness connectors B2, M18
- Harness for open or short between EVAP control system pressure sensor and ECM

>> Repair open circuit or short to ground or short to power in harness or connectors.

5. CHECK EVAP CONTROL SYSTEM PRESSURE SENSOR GROUND CIRCUIT FOR OPEN AND SHORT

1. Turn ignition switch OFF.
2. Disconnect ECM harness connector.
3. Check harness continuity between EVAP control system pressure sensor terminal 1 and ECM terminal 67.
   Refer to Wiring Diagram.

   Continuity should exist.

4. Also check harness for short to ground and short to power.

OK or NG

OK >> GO TO 7.
NG >> GO TO 6.

6. DETECT MALFUNCTIONING PART

Check the following.

- Harness connectors F41, M61
- Harness connectors B2, M18
- Harness for open or short between EVAP control system pressure sensor and ECM

>> Repair open circuit or short to ground or short to power in harness or connectors.

7. CHECK EVAP CONTROL SYSTEM PRESSURE SENSOR INPUT SIGNAL CIRCUIT FOR OPEN AND SHORT

1. Check harness continuity between ECM terminal 32 and EVAP control system pressure sensor terminal 2.
   Refer to Wiring Diagram.

   Continuity should exist.

2. Also check harness for short to ground and short to power.

OK or NG

OK >> GO TO 9.
NG >> GO TO 8.

8. DETECT MALFUNCTIONING PART

Check the following.

- Harness connectors F41, M61
- Harness connectors B2, M18
- Harness for open or short between ECM and EVAP control system pressure sensor

>> Repair open circuit or short to ground or short to power in harness or connectors.

9. CHECK EVAP CONTROL SYSTEM PRESSURE SENSOR

Refer to EC-371, "Component Inspection" .

OK or NG

OK >> GO TO 10.
NG >> Replace EVAP control system pressure sensor.

10. CHECK INTERMITTENT INCIDENT

Refer to EC-153, "TROUBLE DIAGNOSIS FOR INTERMITTENT INCIDENT" .

>> **INSPECTION END**

Component Inspection

ABS00CR4

EVAP CONTROL SYSTEM PRESSURE SENSOR

1. Remove EVAP control system pressure sensor with its harness connector connected from EVAP canister.
   Always replace O-ring with a new one.
2. Install a vacuum pump to EVAP control system pressure sensor.
3. Turn ignition switch ON and check output voltage between ECM terminal 32 and ground under the following conditions.

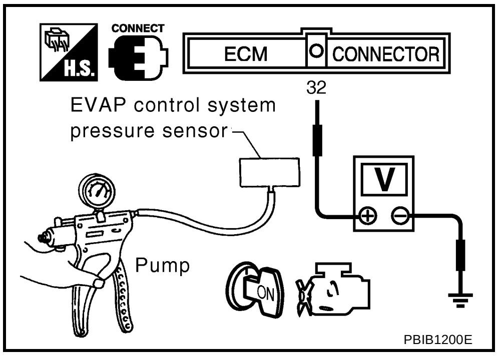

Applied vacuum kPa (mmHg, inHg)	Voltage V
Not applied	1.8 - 4.8
-26.7 (-200, -7.87)	2.1 to 2.5V lower than above value

CAUTION:
- **Always calibrate the vacuum pump gauge when using it.**
- **Do not apply below -93.3 kPa (-700 mmHg, -27.56 inHg) or pressure over 101.3 kPa (760 mmHg, 29.92 inHg).**

4. If NG, replace EVAP control system pressure sensor.

DTC P0453 EVAP CONTROL SYSTEM PRESSURE SENSOR

PFP:25085

Component Description

ABS00CR5

The EVAP control system pressure sensor detects pressure in the purge line. The sensor output voltage to the ECM increases as pressure increases.

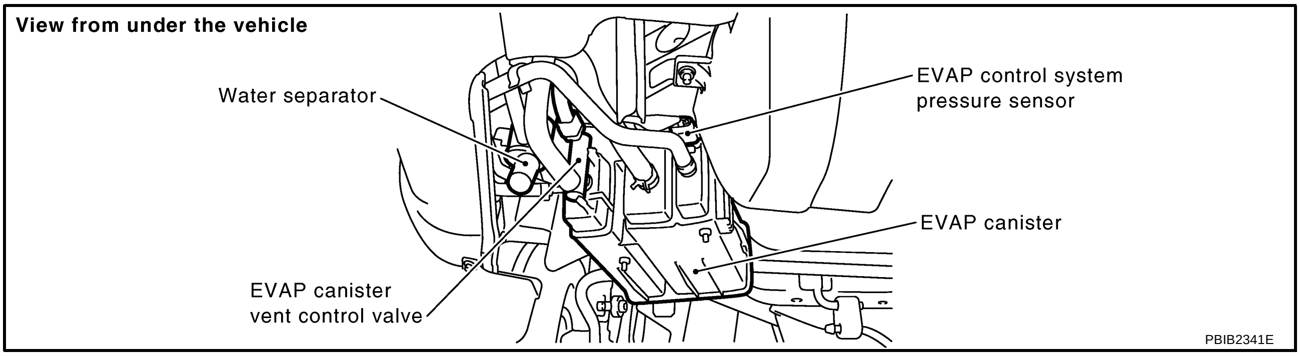

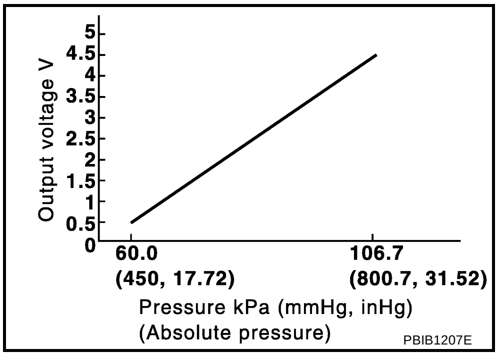

CONSULT-II Reference Value in Data Monitor Mode

ABS00CR6

Specification data are reference values.

MONITOR ITEM	CONDITION	SPECIFICATION
EVAP SYS PRES	● Ignition switch: ON	Approx. 1.8 - 4.8V

On Board Diagnosis Logic

ABS00CR7

NOTE:
If DTC P0453 is displayed with DTC P1229, first perform the trouble diagnosis for DTC P1229. Refer to **EC-499** **.**

DTC No.	Trouble diagnosis name	DTC detecting condition	Possible cause
P0453 0453	EVAP control system pressure sensor high input	An excessively high voltage from the sensor is sent to ECM.	● Harness or connectors (The sensor circuit is open or shorted.) ● EVAP control system pressure sensor ● EVAP canister vent control valve ● EVAP canister ● Water separator ● Rubber hose to EVAP canister vent control valve to water separator

DTC Confirmation Procedure

ABS00CR8

NOTE:
If DTC Confirmation Procedure has been previously conducted, always turn ignition switch OFF and wait at least 10 seconds before conducting the next test.
TESTING CONDITION:
Always perform test at a temperature of 5°C (41°F) or more.

WITH CONSULT-II

1. Start engine and warm it up to normal operating temperature.
2. Turn ignition switch OFF and wait at least 10 seconds.
3. Turn ignition switch ON.
4. Select “DATA MONITOR” mode with CONSULT-II.
5. Make sure that “FUEL T/TEMP SE” is more than 0°C (32°F).
6. Wait at least 10 seconds.
   If 1st trip DTC is detected, go to EC-375, "Diagnostic Procedure"
   .

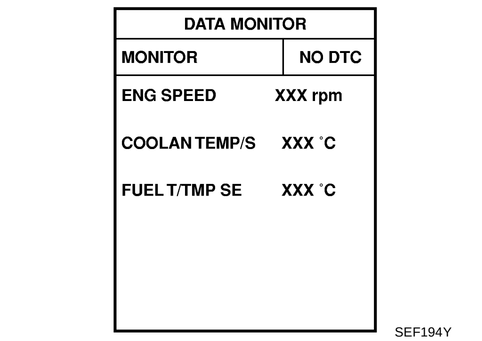

SEF194Y

WITH GST

1. Start engine and warm it up to normal operating temperature.
2. Check that voltage between ECM terminal 107 (Fuel tank temperature sensor signal) and ground is less than 4.2V.
3. Turn ignition switch OFF and wait at least 10 seconds.
4. Wait at least 10 seconds.
5. Select Service $07 with GST.
   If 1st trip DTC is detected, go to EC-375, "Diagnostic Procedure"
   .

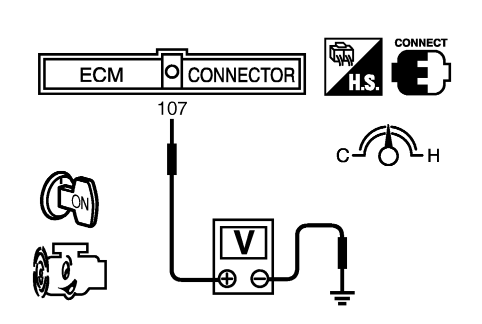

PBIB1199E

Wiring Diagram

ABS00CR9

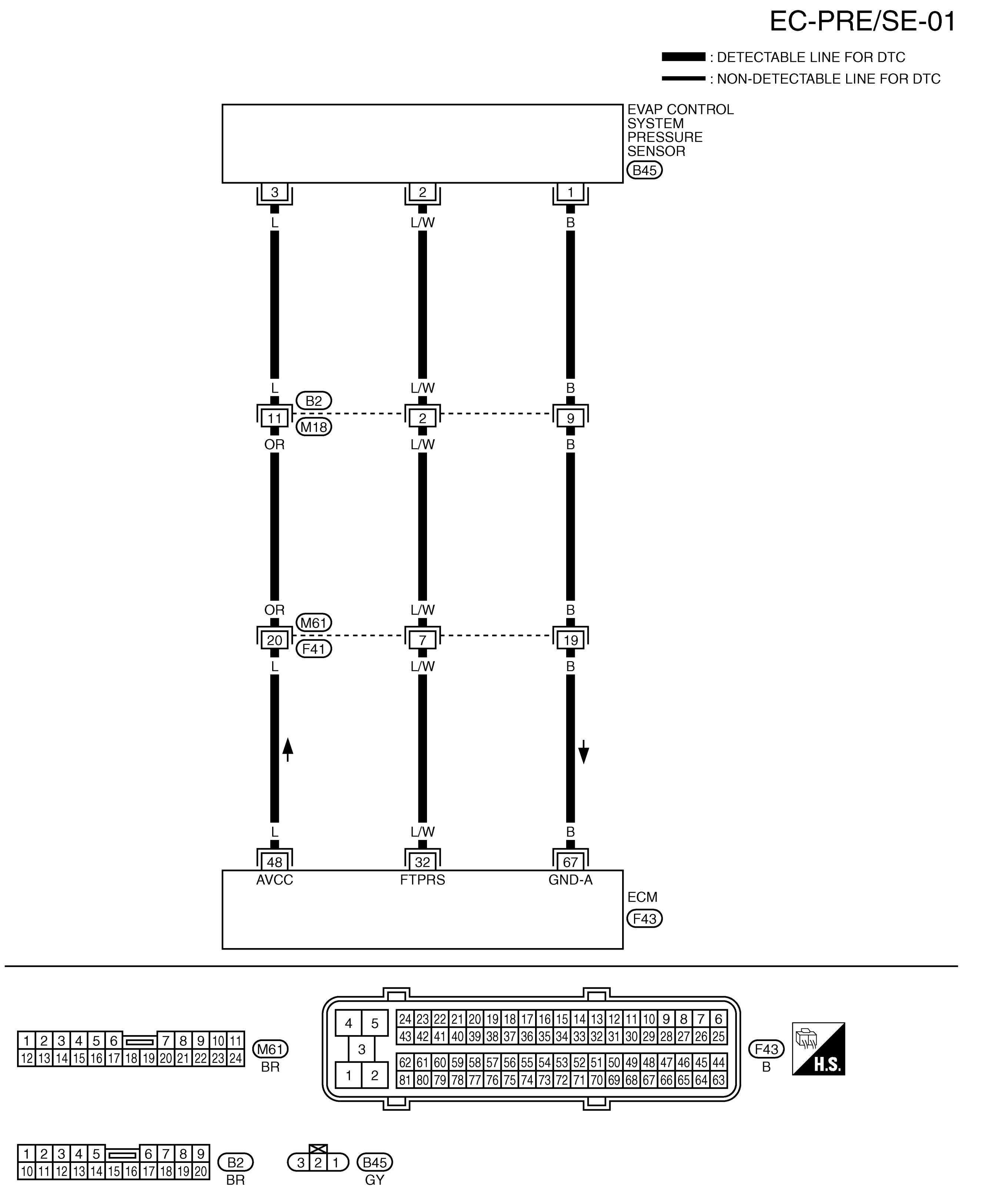

TBWB0125E

Specification data are reference values and are measured between each terminal and ground.

CAUTION:

Do not use ECM ground terminals when measuring input/output voltage. Doing so may result in damage to the ECM's transistor. Use a ground other than ECM terminals, such as the ground.

TERMINAL NO.	WIRE COLOR	ITEM	CONDITION	DATA (DC Voltage)
32	L/W	EVAP control system pressure sensor	**[Ignition switch: ON]**	Approximately 1.8 - 4.8V
48	L	Sensor power supply (EVAP control system pressure sensor)	**[Ignition switch: ON]**	Approximately 5V
67	B	Sensor ground	**[Engine is running]** ● **Warm-up condition** ● Idle speed	Approximately 0V

Diagnostic Procedure

ABS00CRA

1. CHECK GROUND CONNECTIONS

1. Turn ignition switch OFF.
2. Loosen and retighten three ground screws on the body. Refer to EC-161, "Ground Inspection" .

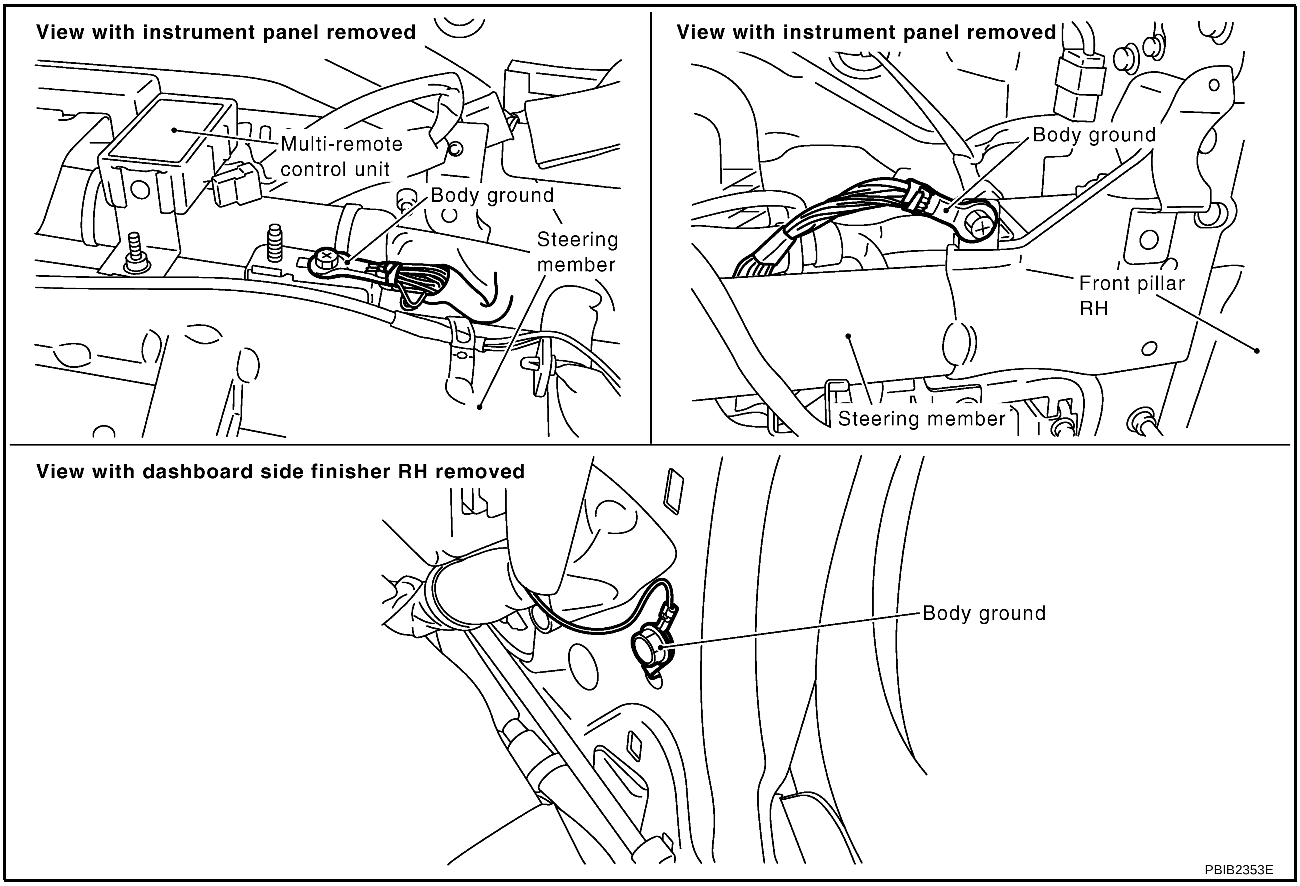

OK or NG

OK >> GO TO 2.
NG >> Repair or replace ground connections.

2. CHECK CONNECTOR

1. Disconnect EVAP control system pressure sensor harness connector.

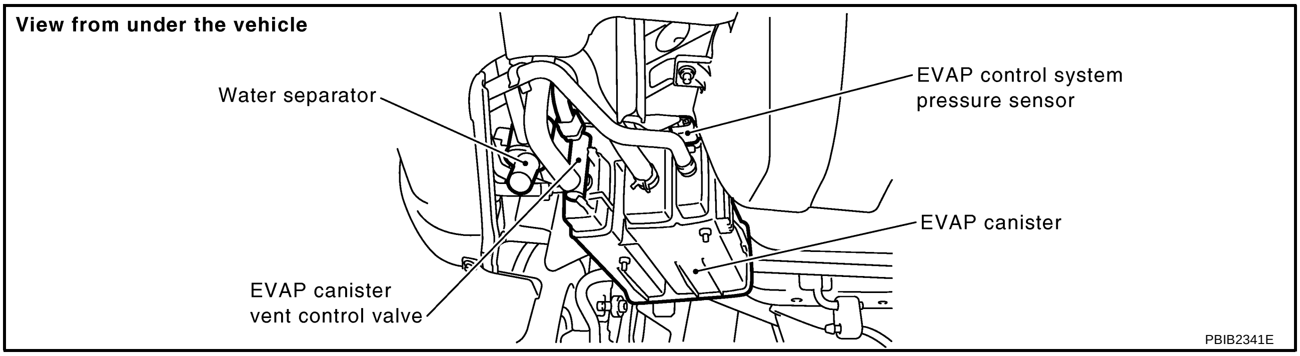

2. Check sensor harness connector for water.

Water should not exist.

OK or NG

OK >> GO TO 3.
NG >> Repair or replace harness connector.

3. CHECK EVAP CONTROL SYSTEM PRESSURE SENSOR POWER SUPPLY CIRCUIT

1. Turn ignition switch ON.
2. Check voltage between EVAP control system pressure sensor terminal 3 and ground with CONSULT-II or tester.

Voltage: Approximately 5V

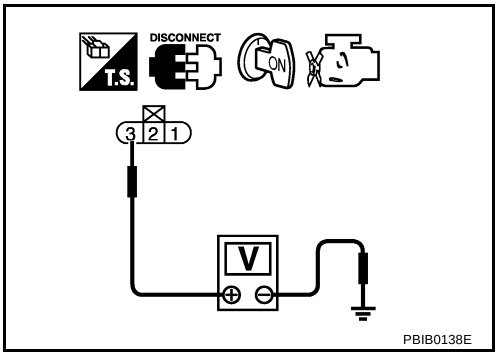

OK or NG

OK >> GO TO 5.
NG >> GO TO 4.

4. DETECT MALFUNCTIONING PART

Check the following.

- Harness connectors F41, M61
- Harness connectors B2, M18
- Harness for open or short between EVAP control system pressure sensor and ECM

>> Repair open circuit or short to ground or short to power in harness or connectors.

5. CHECK EVAP CONTROL SYSTEM PRESSURE SENSOR GROUND CIRCUIT FOR OPEN AND SHORT

1. Turn ignition switch OFF.
2. Disconnect ECM harness connector.
3. Check harness continuity between EVAP control system pressure sensor terminal 1 and ECM terminal 67.
   Refer to Wiring Diagram.

   Continuity should exist.

4. Also check harness for short to ground and short to power.

OK or NG

OK >> GO TO 7.
NG >> GO TO 6.

6. DETECT MALFUNCTIONING PART

Check the following.

- Harness connectors F41, M61
- Harness connectors B2, M18
- Harness for open or short between EVAP control system pressure sensor and ECM

>> Repair open circuit or short to ground or short to power in harness or connectors.

7. CHECK EVAP CONTROL SYSTEM PRESSURE SENSOR INPUT SIGNAL CIRCUIT FOR OPEN AND SHORT

1. Check harness continuity between ECM terminal 32 and EVAP control system pressure sensor terminal 2.
   Refer to Wiring Diagram.

   Continuity should exist.

2. Also check harness for short to ground and short to power.

OK or NG

OK >> GO TO 9.
NG >> GO TO 8.

8. DETECT MALFUNCTIONING PART

Check the following.

- Harness connectors F41, M61
- Harness connectors B2, M18
- Harness for open or short between ECM and EVAP control system pressure sensor

>> Repair open circuit or short to ground or short to power in harness or connectors.

9. CHECK RUBBER TUBE

1. Disconnect rubber tube connected to EVAP canister vent control valve.
2. Check the rubber tube for clogging, vent and kinked.

OK or NG

OK >> GO TO 10.
NG >> Clean the rubber tube using an air blower, repair or replace rubber tube.

10. CHECK EVAP CANISTER VENT CONTROL VALVE

Refer to EC-360, "Component Inspection" .

OK or NG

OK >> GO TO 11.
NG >> Replace EVAP canister vent control valve.

11. CHECK EVAP CONTROL SYSTEM PRESSURE SENSOR

Refer to EC-379, "Component Inspection" .

OK or NG

OK >> GO TO 12.
NG >> Replace EVAP control system pressure sensor.

12. CHECK WATER SEPARATOR

Refer to EC-379, "Component Inspection" .

OK or NG

OK >> GO TO 13.
NG >> Clean or replace water separator.

13. CHECK IF EVAP CANISTER SATURATED WITH WATER

1. Remove EVAP canister with EVAP canister vent control valve and EVAP control system pressure sensor attached.
2. Check if water will drain from the EVAP canister.

Yes or No

Yes >> GO TO 14.
No >> GO TO 16.

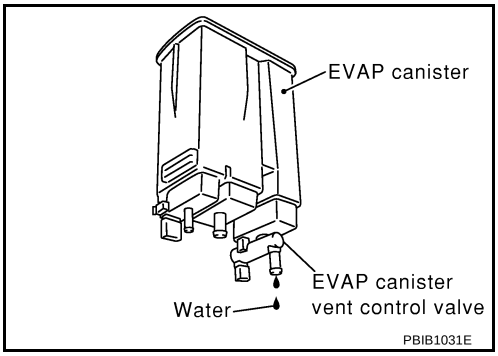

14. CHECK EVAP CANISTER

Weigh the EVAP canister with the EVAP canister vent control valve and EVAP control system pressure sensor attached.
The weight should be less than 2.5 kg (5.5 lb).

OK or NG

OK >> GO TO 16.
NG >> GO TO 15.

15. DETECT MALFUNCTIONING PART

Check the following.

- EVAP canister for damage
- EVAP hose between to EVAP canister and water separator for clogging or poor connection

>> Repair hose or replace EVAP canister.

16. CHECK INTERMITTENT INCIDENT

Refer to EC-153, "TROUBLE DIAGNOSIS FOR INTERMITTENT INCIDENT" .

>> **INSPECTION END**

Component Inspection

ABS00CRB

EVAP CONTROL PRESSURE SENSOR

1. Remove EVAP control system pressure sensor with its harness connector connected from EVAP canister. **Always replace O-ring with a new one.**
2. Install a vacuum pump to EVAP control system pressure sensor.
3. Turn ignition switch ON and check output voltage between ECM terminal 32 and ground under the following conditions.

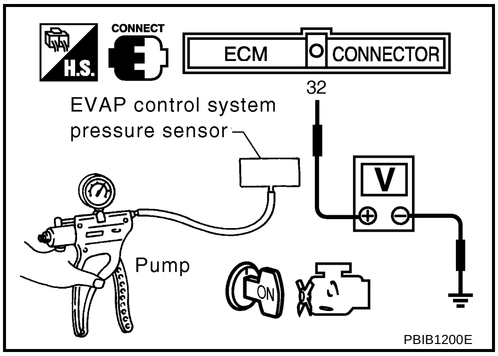

Applied vacuum kPa (mmHg, inHg)	Voltage V
Not applied	1.8 - 4.8
-26.7 (-200, -7.87)	2.1 to 2.5V lower than above value

CAUTION:

- **Always calibrate the vacuum pump gauge when using it.**
- **Do not apply below -93.3 kPa (-700 mmHg, -27.56 inHg) or pressure over 101.3 kPa (760 mmHg, 29.92 inHg).**

4. If NG, replace EVAP control system pressure sensor.

WATER SEPARATOR

1. Check visually for insect nests in the water separator air inlet.
2. Check visually for cracks or flaws in the appearance.
3. Check visually for cracks or flaws in the hose.
4. Check that **A** and **C** are not clogged by blowing air into **B** with **A** , and then **C** plugged.
5. In case of NG in items 2 - 4, replace the parts.

NOTE:
Do not disassemble water separator.

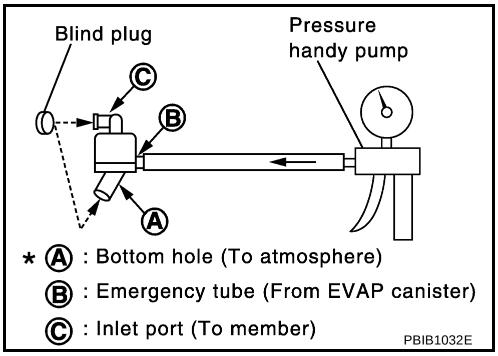

DTC P0455 EVAP CONTROL SYSTEM

PFP:14950

On Board Diagnosis Logic

ABS00CRC

This diagnosis detects a very large leak (fuel filler cap fell off etc.) in EVAP system between the fuel tank and EVAP canister purge volume control solenoid valve.

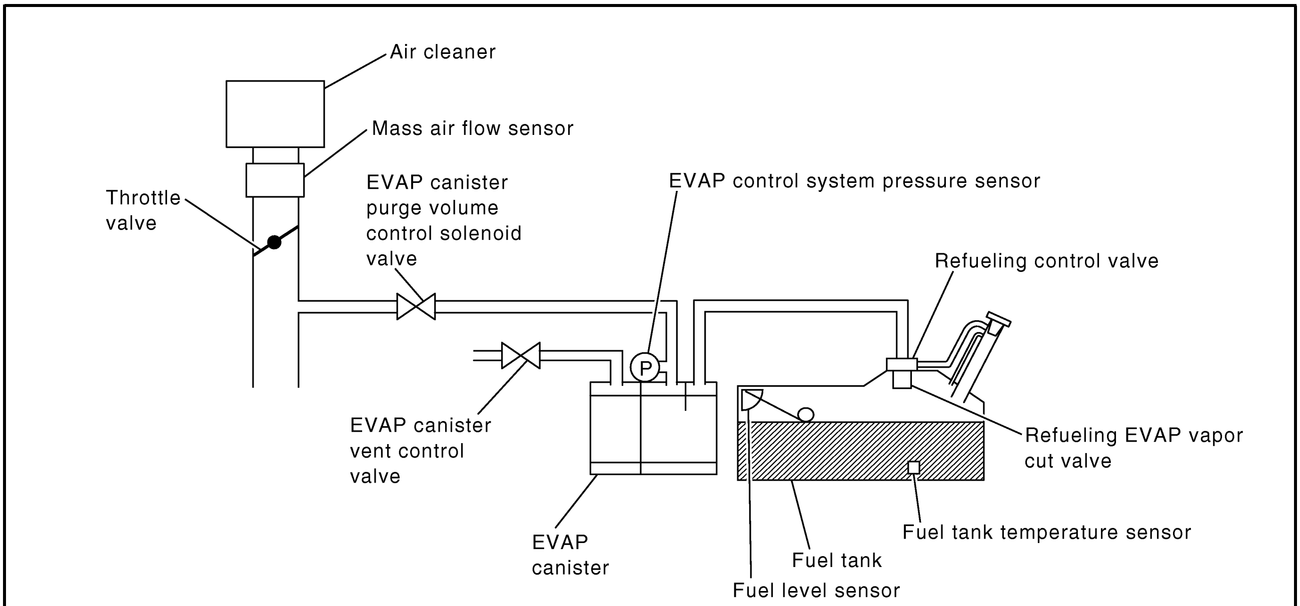

PBIB2359E

DTC No.	Trouble diagnosis name	DTC detecting condition	Possible cause
P0455 0455	EVAP control system gross leak detected	EVAP control system has a very large leak such as fuel filler cap fell off, EVAP control system does not operate properly.	● Fuel filler cap remains open or fails to close. ● Incorrect fuel tank vacuum relief valve ● Incorrect fuel filler cap used ● Foreign matter caught in fuel filler cap. ● Leak is in line between intake manifold and EVAP canister purge volume control solenoid valve. ● Foreign matter caught in EVAP canister vent control valve. ● EVAP canister or fuel tank leaks ● EVAP purge line (pipe and rubber tube) leaks ● EVAP purge line rubber tube bent. ● Blocked or bent rubber table to EVAP ● Loose or disconnected rubber tube ● EVAP canister vent control valve and the circuit ● EVAP canister purge volume control solenoid valve and the circuit ● Fuel tank temperature sensor ● O-ring of EVAP canister vent control valve is missing or damaged. ● EVAP control system pressure sensor ● Refueling EVAP vapor cut valve ● Refueling control valve ● ORVR system leaks

CAUTION:

- **Use only a genuine NISSAN fuel filler cap as a replacement. If an incorrect fuel filler cap is used, the MIL may come on.**
- **If the fuel filler cap is not tightened properly, the MIL may come on.**
- **Use only a genuine NISSAN rubber tube as a replacement.**

DTC Confirmation Procedure

ABS00CRD

CAUTION:

Never remove fuel filler cap during the DTC Confirmation Procedure.

NOTE:

- **Make sure that EVAP hoses are connected to EVAP canister purge volume control solenoid valve properly.**
- If DTC Confirmation Procedure has been previously conducted, always turn ignition switch OFF and wait at least 10 seconds before conducting the next test.

TESTING CONDITION:

- **Perform "DTC WORK SUPPORT" when the fuel level is between 1/4 and 3/4 full, and vehicle is placed on flat level surface.**
- **Open engine hood before conducting the following procedures.**

WITH CONSULT-II

1. Tighten fuel filler cap securely until racheting sound is heard.
2. Turn ignition switch ON.
3. Turn ignition switch OFF and wait at least 10 seconds.
4. Turn ignition switch ON and select "DATA MONITOR" mode with CONSULT-II.
5. Make sure that the following conditions are met.
   COOLAN TEMP/S: 0 - 70°C (32 - 158°F)
   INT/A TEMP SE: 0 - 60°C (32 - 140°F)
6. Select "EVAP SML LEAK P0442/P1442" of "EVAPORATIVE SYSTEM" in "DTC WORK SUPPORT" mode with CONSULT-II. Follow the instruction displayed.

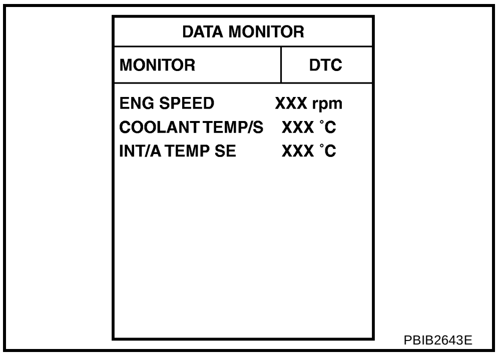

PBIB2643E

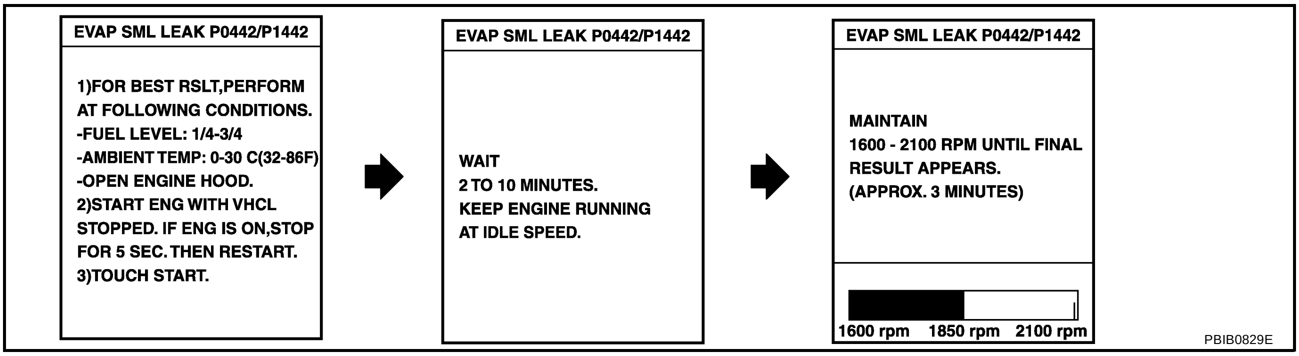

PBIB0829E

NOTE:

If the engine speed cannot be maintained within the range displayed on the CONSULT-II screen, go to EC-70, "Basic Inspection" .

7. Make sure that "OK" is displayed.

If “NG” is displayed, select “SELF-DIAG RESULTS” mode with CONSULT-II and make sure that “EVAP GROSS LEAK [P0455]” is displayed. If it is displayed, refer to EC-382, "Diagnostic Procedure" .
If P0442 is displayed, perform Diagnostic Procedure for DTC P0442, EC-341 .

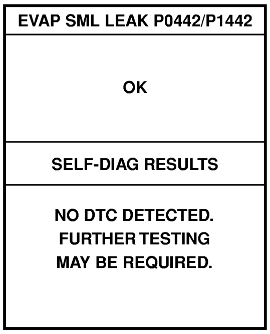

SEC763C

WITH GST

NOTE:
Be sure to read the explanation of EC-57, "Driving Pattern" before driving vehicle.

1. Start engine.
2. Drive vehicle according to EC-57, "Driving Pattern" .
3. Stop vehicle.
4. Turn ignition switch OFF, wait at least 10 seconds and then turn ignition switch ON.
5. Select Service $07 with GST.

- If P0455 is displayed on the screen, go to EC-382, "Diagnostic Procedure" .
- If P0442 is displayed on the screen, go to EC-341, "Diagnostic Procedure" for DTC P0442.
- If P0441 is displayed on the screen, go to EC-334, "Diagnostic Procedure" . for DTC P0441.

Diagnostic Procedure

ABS00CRE

1. CHECK FUEL FILLER CAP DESIGN

1. Turn ignition switch OFF.
2. Check for genuine NISSAN fuel filler cap design.

OK or NG

OK >> GO TO 2.
NG >> Replace with genuine NISSAN fuel filler cap.

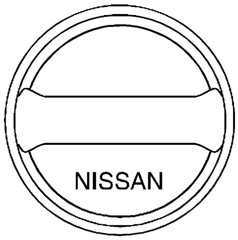

SEF915U

2. CHECK FUEL FILLER CAP INSTALLATION

Check that the cap is tightened properly by rotating the cap clockwise.

OK or NG

OK >> GO TO 3.
NG >> 1. Open fuel filler cap, then clean cap and fuel filler neck threads using air blower.
2. Retighten until racheting sound is heard.

3. CHECK FUEL FILLER CAP FUNCTION

Check for air releasing sound while opening the fuel filler cap.

OK or NG

OK >> GO TO 5.
NG >> GO TO 4.

A
EC
C
D
E
F
G
H
I
J
K
L
M

4. CHECK FUEL TANK VACUUM RELIEF VALVE

Refer to EC-33, "FUEL TANK VACUUM RELIEF VALVE (BUILT INTO FUEL FULLER CAP)"

OK or NG

OK >> GO TO 5.
NG >> Replace fuel filler cap with a genuine one.

5. CHECK EVAP PURGE LINE

Check EVAP purge line (pipe, rubber tube, fuel tank and EVAP canister) for cracks, improper connection or disconnection.
Refer to EC-30, "EVAPORATIVE EMISSION SYSTEM" .

OK or NG

OK >> GO TO 6.
NG >> Repair or reconnect the hose.

6. CLEAN EVAP PURGE LINE

Clean EVAP purge line (pipe and rubber tube) using air blower.

>> GO TO 7.

7. CHECK EVAP CANISTER VENT CONTROL VALVE

Check the following.

- EVAP canister vent control is installed properly.
  Refer to EC-34, "Removal and Installation"
- EVAP canister vent control valve.
  Refer to EC-360, "Component Inspection"

OK or NG

OK >> GO TO 8.
NG >> Repair or replace EVAP canister vent control valve and O-ring.

8. INSTALL THE PRESSURE PUMP

To locate the EVAP leak, install EVAP service port adapter and pressure pump to EVAP service port securely.

NOTE:

Improper installation of the EVAP service port adapter to the EVAP service port may cause leaking.

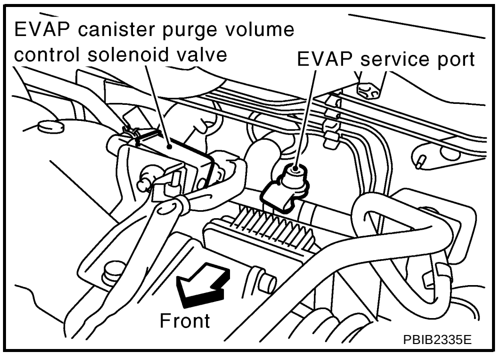

PBIB2335E

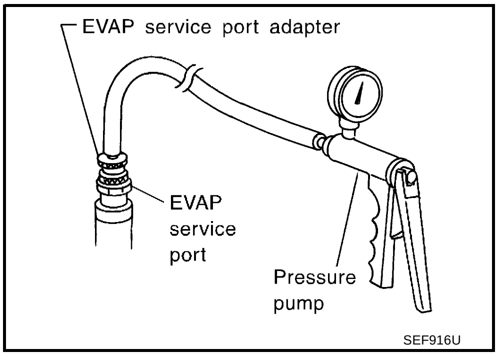

SEF916U

With CONSULT-II>>GO TO 9.
Without CONSULT-II>>GO TO 10.

9. CHECK FOR EVAP LEAK

With CONSULT-II

1. Turn ignition switch ON.
2. Select “EVAP SYSTEM CLOSE” of “WORK SUPPORT” mode with CONSULT-II.
3. Touch “START” and apply pressure into the EVAP line until the pressure indicator reaches the middle of the bar graph.

   CAUTION:
   - **Never use compressed air or a high pressure pump.**
   - **Do not exceed 4.12 kPa (0.042 kg/cm^2 , 0.6 psi) of pressure in the system.**

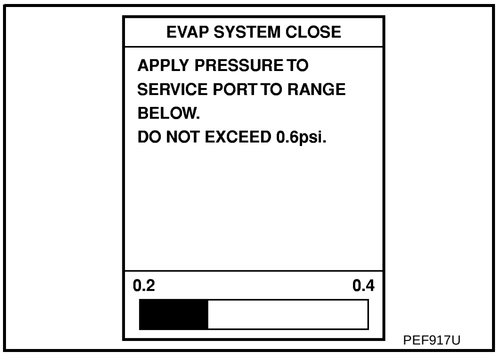

PEF917U

4. Using EVAP leak detector, locate the EVAP leak. For the leak detector, refer to the instruction manual for more details.
   Refer to EC-31, "EVAPORATIVE EMISSION LINE DRAWING" .

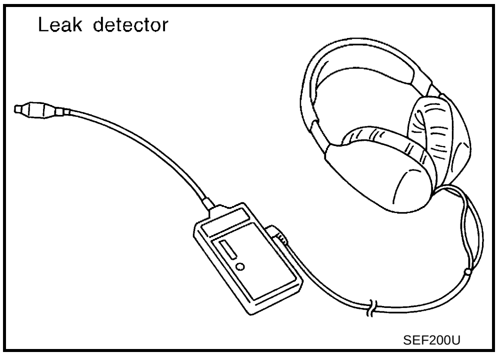

SEF200U

OK or NG

OK >> GO TO 11.
NG >> Repair or replace.

A
EC
C
D
E
F
G
H
I
J
K
L
M

10. CHECK FOR EVAP LEAK

Without CONSULT-II

1. Turn ignition switch OFF.
2. Apply 12 volts DC to EVAP canister vent control valve. The valve will close. (Continue to apply 12 volts until the end of test.)

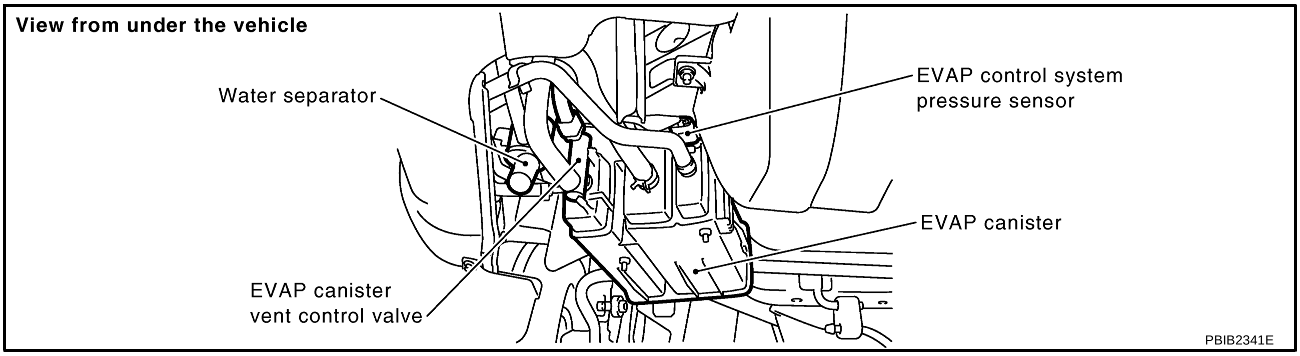

3. Pressurize the EVAP line using pressure pump with 1.3 to 2.7 kPa (10 to 20 mmHg, 0.39 to 0.79 inHg), then remove pump and EVAP service port adapter.

   CAUTION:
   - **Never use compressed air or a high pressure pump.**
   - **Do not exceed 4.12 kPa (0.042 kg/cm^2 , 0.6 psi) of pressure in the system.**

4. Using EVAP leak detector, locate the EVAP leak. For the leak detector, refer to the instruction manual for more details. Refer to EC-31, "EVAPORATIVE EMISSION LINE DRAWING" .

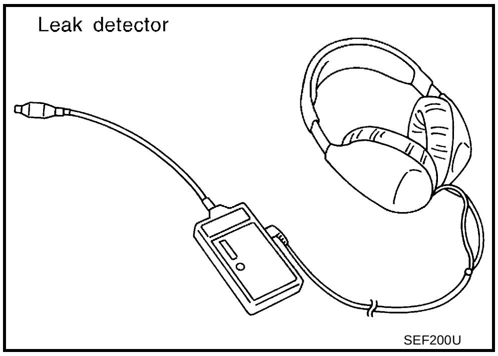

OK or NG

OK >> GO TO 12.
NG >> Repair or replace.

11. CHECK EVAP CANISTER PURGE VOLUME CONTROL SOLENOID VALVE OPERATION

With CONSULT-II

1. Disconnect vacuum hose to EVAP canister purge volume control solenoid valve at EVAP service port.
2. Start engine.
3. Perform “PURG VOL CONT/V” in “ACTIVE TEST” mode.
4. Touch “Qu” on CONSULT-II screen to increase “PURG VOL CONT/V” opening to 100%.
5. Check vacuum hose for vacuum when revving engine up to 2,000 rpm.

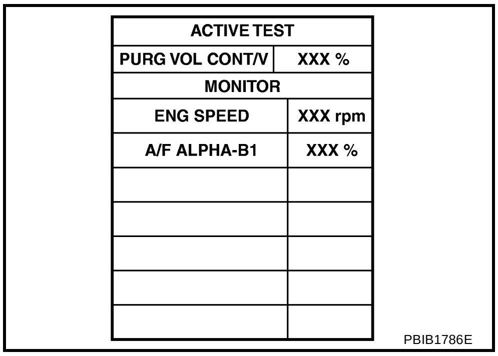

OK or NG

OK >> GO TO 14.
NG >> GO TO 13.

12. CHECK EVAP CANISTER PURGE VOLUME CONTROL SOLENOID VALVE OPERATION

Without CONSULT-II

1. Start engine and warm it up to normal operating temperature.
2. Stop engine.
3. Disconnect vacuum hose to EVAP canister purge volume control solenoid valve at EVAP service port.
4. Start engine and let it idle for at least 80 seconds.
5. Check vacuum hose for vacuum when revving engine up to 2,000 rpm.

OK or NG

OK >> GO TO 15.
NG >> GO TO 13.

13. CHECK VACUUM HOSE

Check vacuum hoses for clogging or disconnection. Refer to EC-112, "Vacuum Hose Drawing" .

OK or NG

OK (With CONSULT-II)>>GO TO 14.
OK (Without CONSULT-II)>>GO TO 15.
NG >> Repair or reconnect the hose.

14. CHECK EVAP CANISTER PURGE VOLUME CONTROL SOLENOID VALVE

With CONSULT-II

1. Start engine.
2. Perform “PURG VOL CONT/V” in “ACTIVE TEST” mode with CONSULT-II. Check that engine speed varies according to the valve opening.

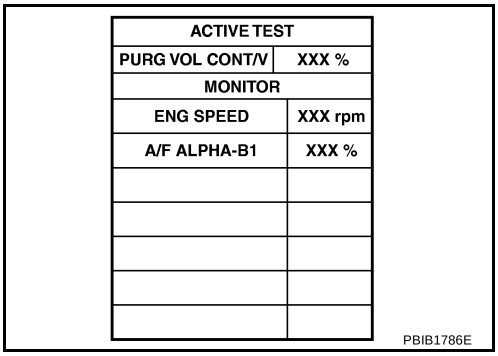

OK or NG

OK >> GO TO 16.
NG >> GO TO 15.

15. CHECK EVAP CANISTER PURGE VOLUME CONTROL SOLENOID VALVE

Refer to EC-353, "Component Inspection" .

OK or NG

OK >> GO TO 16.
NG >> Replace EVAP canister purge volume control solenoid valve.

16. CHECK FUEL TANK TEMPERATURE SENSOR

Refer to EC-284, "Component Inspection" .

OK or NG

OK >> GO TO 17.
NG >> Replace fuel level sensor unit.

17. CHECK EVAP CONTROL SYSTEM PRESSURE SENSOR

Refer to EC-371, "Component Inspection" .

OK or NG

OK >> GO TO 18.
NG >> Replace EVAP control system pressure sensor.

18. CHECK EVAP/ORVR LINE

Check refueling EVAP/ORVR line between EVAP canister and fuel tank for clogging, kink, looseness and improper connection. For location, refer to EC-37, "ON BOARD REFUELING VAPOR RECOVERY (ORVR)" .

OK or NG

OK >> GO TO 19.
>> Repair or replace hoses and tubes.

19. CHECK SIGNAL LINE AND RECIRCULATION LINE

Check signal line and recirculation line between filler neck tube and fuel tank for clogging, kink, cracks, looseness and improper connection.

OK or NG

OK >> GO TO 20.
>> Repair or replace hoses, tubes or filler neck tube.

20. CHECK REFUELING CONTROL VALVE

Refer to EC-41, "Component Inspection" .

OK or NG

OK >> GO TO 21.
NG >> Replace refueling control valve.

21. CHECK EVAPP VAPOR CUT VALVE

Refer to EC-41, "Component Inspection" .

OK or NG

OK >> GO TO 22.
NG >> Replace refueling EVAP vapor cut valve with fuel tank.

22. CHECK INTERMITTENT INCIDENT

Refer to EC-153, "TROUBLE DIAGNOSIS FOR INTERMITTENT INCIDENT" .

>> **INSPECTION END**

DTC P0456 EVAP CONTROL SYSTEM

PFP:14950

On Board Diagnosis Logic

ABS00CRF

This diagnosis detects very small leaks in the EVAP line between fuel tank and EVAP canister purge volume control solenoid valve, using the intake manifold vacuum in the same way as conventional EVAP small leak diagnosis.

If ECM judges a leak which corresponds to a very small leak, the very small leak P0456 will be detected.

If ECM judges a leak equivalent to a small leak, EVAP small leak P0442 will be detected.

If ECM judges there are no leaks, the diagnosis will be OK.

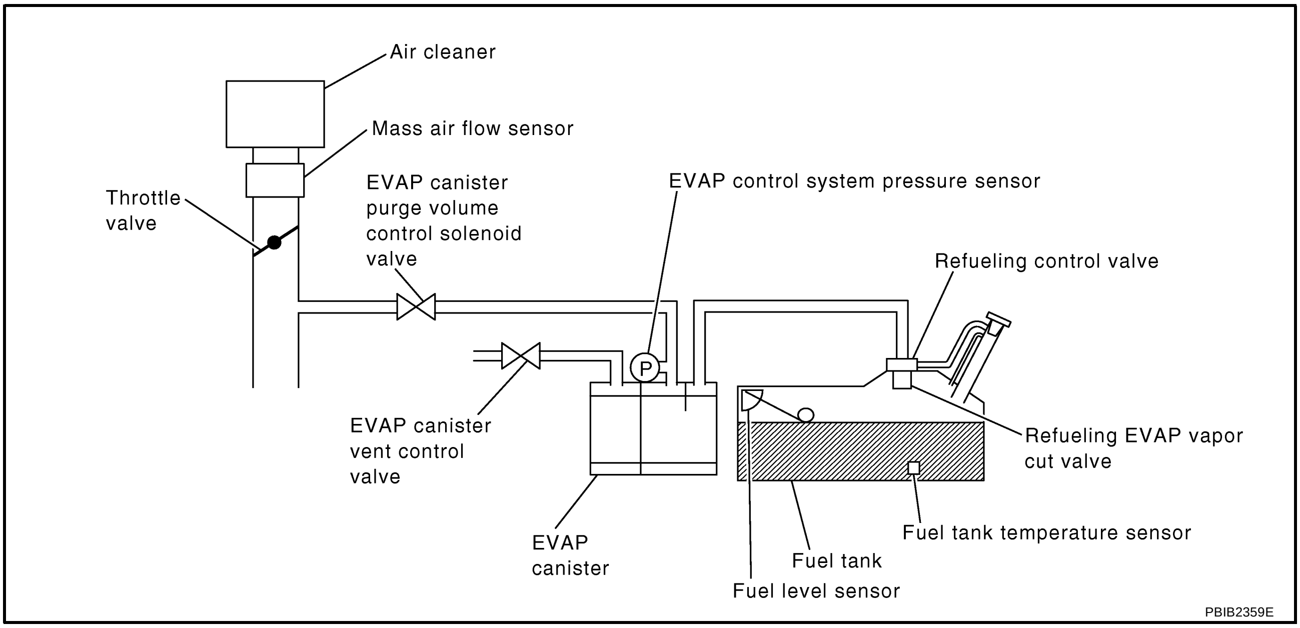

DTC No.	Trouble diagnosis name	DTC detecting condition	Possible cause
P0456 0456	Evaporative emission control system very small leak (negative pressure check)	• EVAP system has a very small leak. • EVAP system does not operate properly.	• Incorrect fuel tank vacuum relief valve • Incorrect fuel filler cap used • Fuel filler cap remains open or fails to close. • Foreign matter caught in fuel filler cap. • Leak is in line between intake manifold and EVAP canister purge volume control solenoid valve. • Foreign matter caught in EVAP canister vent control valve. • EVAP canister or fuel tank leaks • EVAP purge line (pipe and rubber tube) leaks • EVAP purge line rubber tube bent • Loose or disconnected rubber tube • EVAP canister vent control valve and the circuit • EVAP canister purge volume control solenoid valve and the circuit • Fuel tank temperature sensor • Water separator • O-ring of EVAP canister vent control valve is missing or damaged • EVAP canister is saturated with water • EVAP control system pressure sensor • Refueling EVAP vapor cut valve • ORVR system leaks • Refueling control valve • Fuel level sensor and the circuit • Foreign matter caught in EVAP canister purge volume control solenoid valve

CAUTION:

- **Use only a genuine NISSAN fuel filler cap as a replacement. If an incorrect fuel filler cap is used, the MIL may come on.**
- **If the fuel filler cap is not tightened properly, the MIL may come on.**
- **Use only a genuine NISSAN rubber tube as a replacement.**

DTC Confirmation Procedure

ABS00CRG

NOTE:

- **If DTC P0456 is displayed with P0442, first perform trouble diagnosis for DTC P0456.**
- **After repair, make sure that the hoses and clips are installed properly.**
- If DTC Confirmation Procedure has been previously conducted, always turn ignition switch OFF and wait at least 10 seconds before conducting the next test.

TESTING CONDITION:

- **Open engine hood before conducting following procedure.**
- **If any of following conditions are met just before the DTC confirmation procedure, leave the vehicle for more than 1 hour.**
  - **Fuel filler cap is removed.**
  - **Refilled or drained the fuel.**
  - **EVAP component parts is/are removed.**
- **Before performing the following procedure, confirm that battery voltage is more than 11V at idle.**

WITH CONSULT-II

1. Turn ignition switch ON and select “DATA MONITOR” mode with CONSULT-II.
2. Make sure the following conditions are met.
   FUEL LEVEL SE: 0.25 - 1.4V
   COOLAN TEMP/S: 0 - 32°C (32 - 90°F)
   FUEL T/TMP SE: 0 - 35°C (32 - 95°F)
   INT/A TEMP SE: More than 0°C (32°F)
   If NG, turn ignition switch OFF and leave the vehicle in a cool place (soak the vehicle) or refilling/draining fuel until the output voltage condition of the “FUEL LEVEL SE” meets within the range above and leave the vehicle for more than 1 hour. Then start from step 1).

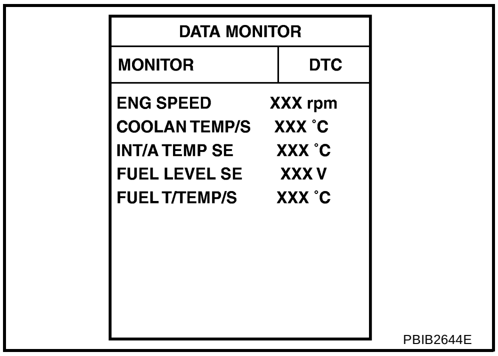

3. Turn ignition switch OFF and wait at least 10 seconds.
4. Turn ignition switch ON.
5. Select “EVAP V/S LEAK P0456” of “EVAPORATIVE SYSTEM” in “DTC WORK SUPPORT” mode with CONSULT-II.
   Follow the instruction displayed.

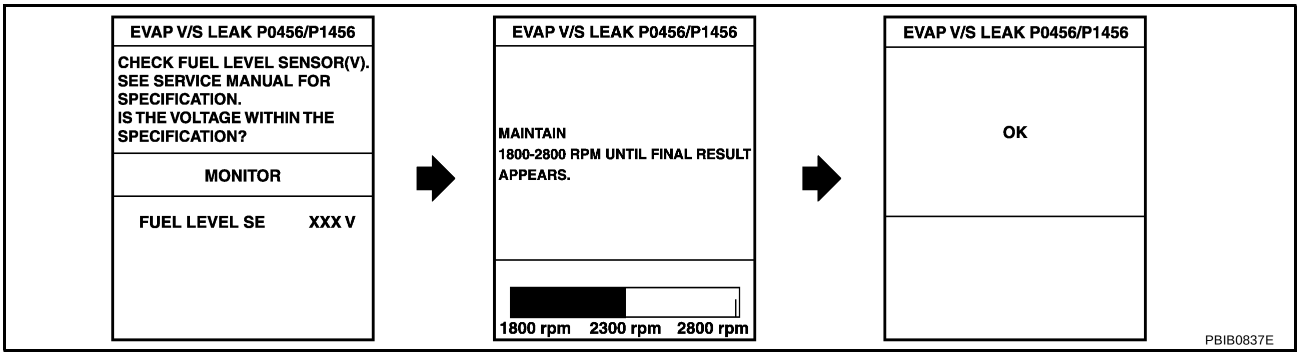

6. Make sure that “OK” is displayed.
   If “NG” is displayed, refer to EC-391, "Diagnostic Procedure" .

   NOTE:
   - **If the engine speed cannot be maintained within the range displayed on CONSULT-II screen, go to EC-70, "Basic Inspection" .**
   - **Make sure that EVAP hoses are connected to EVAP canister purge volume control solenoid valve properly.**

Overall Function Check

ABS00CRH

WITH GST

Use this procedure to check the overall function of the EVAP very small leak function. During this check, a 1st trip DTC might not be confirmed.

CAUTION:

- **Never use compressed air, doing so may damage the EVAP system.**
- **Do not start engine.**
- **Do not exceeded 4.12 kPa (0.042 kg/cm^2 , 0.6 psi).**

1. Attach the EVAP service port adapter securely to the EVAP service port.

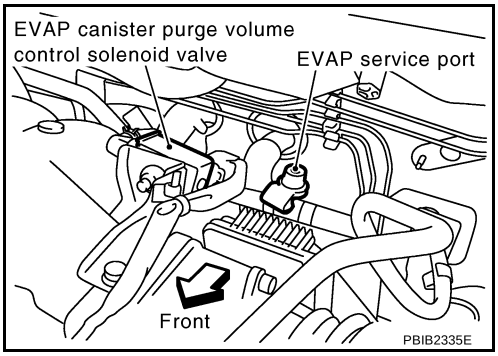

A
EC
C
D
E
F
G
H
I
J
K
L
M

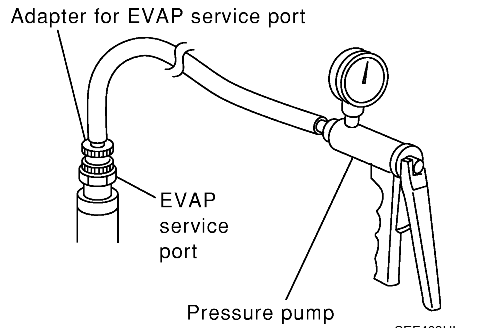

SEF462UI

2. Set the pressure pump and a hose.
3. Also set a vacuum gauge via 3-way connector and a hose.
4. Turn ignition switch ON.
5. Connect GST and select Service $08.
6. Using Service $08 control the EVAP canister vent control valve (close).
7. Apply pressure and make sure the following conditions are satisfied.
   Pressure to be applied: 2.7 kPa (20 mmHg, 0.79 inHg)
   Time to be waited after the pressure drawn in to the EVAP system and the pressure to be dropped: 60 seconds and the pressure should not be dropped more than 0.4 kPa (3 mmHg, 0.12 inHg).
   If NG, go to EC-391, "Diagnostic Procedure" .
   If OK, go to next step.
8. Disconnect GST.
9. Start engine and warm it up to normal operating temperature.
10. Turn ignition switch OFF and wait at least 10 seconds.
11. Restart engine and let it idle for 90 seconds.
12. Keep engine speed at 2,000 rpm for 30 seconds.
13. Turn ignition switch OFF.
    NOTE:
    For more information, refer to GST Instruction Manual.

Diagnostic Procedure

ABS00CRI

1. CHECK FUEL FILLER CAP DESIGN

1. Turn ignition switch OFF.
2. Check for genuine NISSAN fuel filler cap design.

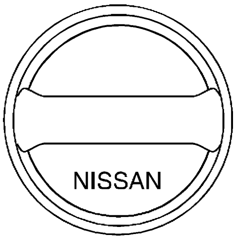

SEF915U

OK or NG

OK >> GO TO 2.
NG >> Replace with genuine NISSAN fuel filler cap.

2. CHECK FUEL FILLER CAP INSTALLATION

Check that the cap is tightened properly by rotating the cap clockwise.

OK or NG

OK >> GO TO 3.
NG >> 1. Open fuel filler cap, then clean cap and fuel filler neck threads using air blower.
2. Retighten until racheting sound is heard.

3. CHECK FUEL FILLER CAP FUNCTION

Check for air releasing sound while opening the fuel filler cap.

OK or NG

OK >> GO TO 5.
NG >> GO TO 4.

4. CHECK FUEL TANK VACUUM RELIEF VALVE

Refer to EC-33, "FUEL TANK VACUUM RELIEF VALVE (BUILT INTO FUEL FULLER CAP)" .

OK or NG

OK >> GO TO 5.
NG >> Replace fuel filler cap with a genuine one.

5. INSTALL THE PRESSURE PUMP

To locate the EVAP leak, install EVAP service port adapter and pressure pump to EVAP service port securely.
For the location of EVAP service port, refer to EC-31, "EVAPORATIVE EMISSION LINE DRAWING" .

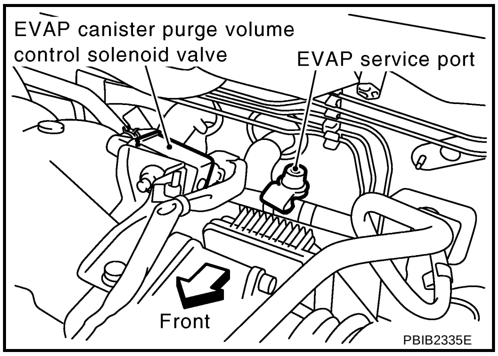

PBIB2335E

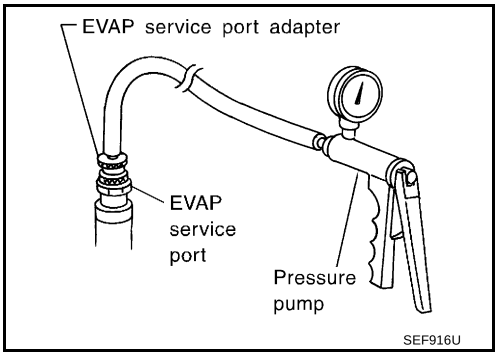

SEF916U

NOTE:
Improper installation of the EVAP service port adapter to the EVAP service port may cause leaking.

With CONSULT-II>>GO TO 6.
Without CONSULT-II>>GO TO 7.

A
EC
C
D
E
F
G
H
I
J
K
L
M

6. CHECK FOR EVAP LEAK

With CONSULT-II

1. Turn ignition switch ON.
2. Select “EVAP SYSTEM CLOSE” of “WORK SUPPORT” mode with CONSULT-II.
3. Touch “START” and apply pressure into the EVAP line until the pressure indicator reaches the middle of the bar graph.

   CAUTION:
   - **Never use compressed air or a high pressure pump.**
   - **Do not exceed 4.12 kPa (0.042 kg/cm^2 , 0.6 psi) of pressure in the system.**

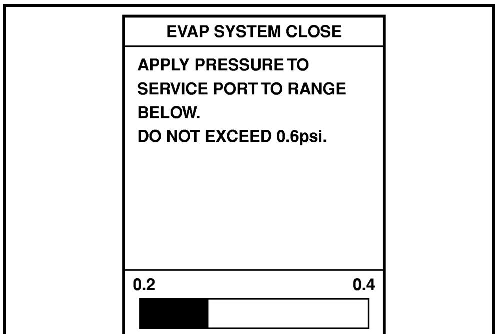

PEF917U

4. Using EVAP leak detector, locate the EVAP leak. For the leak detector, refer to the instruction manual for more details.
   Refer to EC-31, "EVAPORATIVE EMISSION LINE DRAWING" .

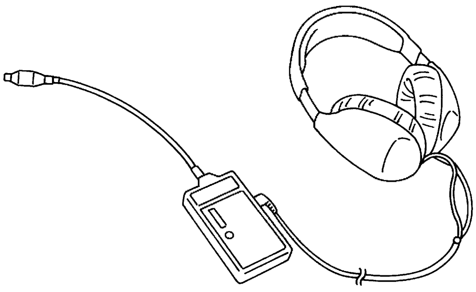

SEF200U

OK or NG

OK >> GO TO 8.
NG >> Repair or replace.

7. CHECK FOR EVAP LEAK

Without CONSULT-II

1. Turn ignition switch OFF.
2. Apply 12 volts DC to EVAP canister vent control valve. The valve will close. (Continue to apply 12 volts until the end of test.)

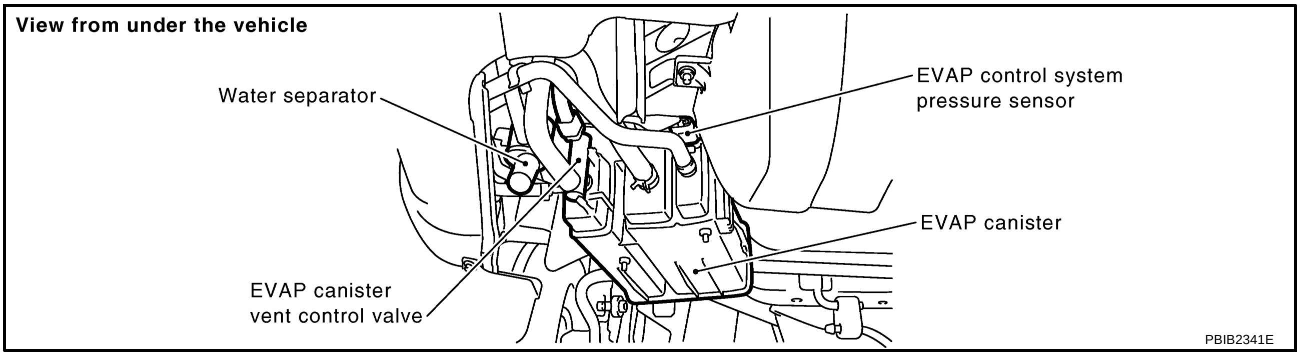

PBIB2341E

3. Pressurize the EVAP line using pressure pump with 1.3 to 2.7 kPa (10 to 20 mmHg, 0.39 to 0.79 inHg), then remove pump and EVAP service port adapter.

CAUTION:

- **Never use compressed air or a high pressure pump.**
- **Do not exceed 4.12 kPa (0.042 kg/cm^2 , 0.6 psi) of pressure in the system.**

4. Using EVAP leak detector, locate the EVAP leak. For the leak detector, refer to the instruction manual for more details. Refer to EC-31, "EVAPORATIVE EMISSION LINE DRAWING" .

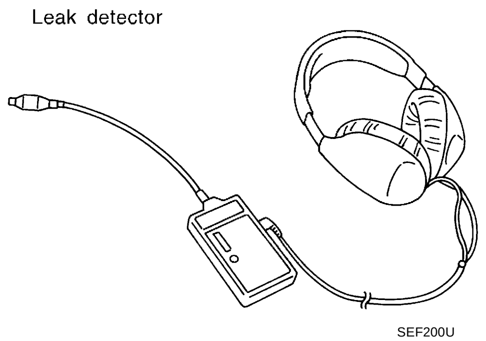

SEF200U

OK or NG

OK >> GO TO 8.
NG >> Repair or replace.

8. CHECK WATER SEPARATOR

Refer to EC-397, "Component Inspection" .

OK or NG

OK >> GO TO 9.
NG >> Replace water separator.

9. CHECK EVAP CANISTER VENT CONTROL VALVE

Check the following.

- EVAP canister vent control valve is installed properly. Refer to EC-34, "Removal and Installation"
- EVAP canister vent control valve. Refer to EC-360, "Component Inspection"

OK or NG

OK >> GO TO 10.
NG >> Repair or replace EVAP canister vent control valve and O-ring.

A
EC
C
D
E
F
G
H
I
J
K
L
M

10. CHECK IF EVAP CANISTER SATURATED WITH WATER

1. Remove EVAP canister with EVAP canister vent control valve and EVAP control system pressure sensor attached.
2. Does water drain from the EVAP canister?

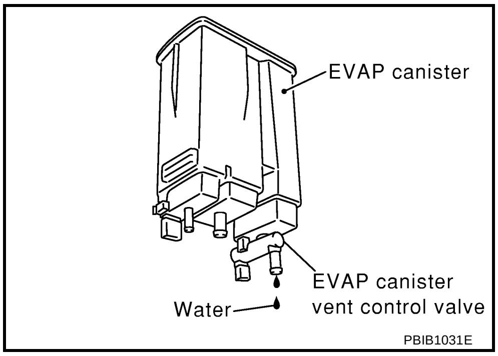

Yes or No

Yes >> GO TO 11.
No (With CONSULT-II)>>GO TO 13.
No (Without CONSULT-II)>>GO TO 14.

11. CHECK EVAP CANISTER

Weigh the EVAP canister with the EVAP canister vent control valve and EVAP control system pressure sensor attached.

The weight should be less than 2.5 kg (5.5 lb).

OK or NG

OK (With CONSULT-II)>>GO TO 13.
OK (Without CONSULT-II)>>GO TO 14.
NG >> GO TO 12.

12. DETECT MALFUNCTIONING PART

Check the following.

- EVAP canister for damage
- EVAP hose between EVAP canister and water separator for clogging or poor connection

>> Repair hose or replace EVAP canister.

13. CHECK EVAP CANISTER PURGE VOLUME CONTROL SOLENOID VALVE OPERATION

With CONSULT-II

1. Disconnect vacuum hose to EVAP canister purge volume control solenoid valve at EVAP service port.
2. Start engine.
3. Perform “PURG VOL CONT/V” in “ACTIVE TEST” mode.
4. Touch “Qu” on CONSULT-II screen to increase “PURG VOL CONT/V” opening to 100%.
5. Check vacuum hose for vacuum when revving engine up to 2,000 rpm.

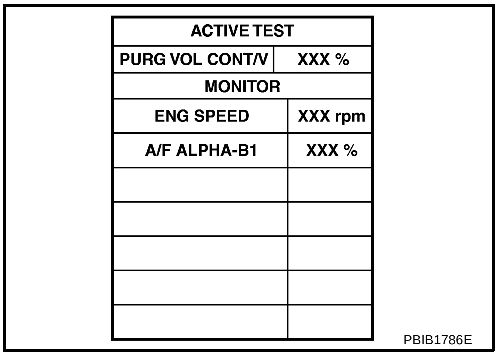

OK or NG

OK >> GO TO 16.
NG >> GO TO 15.

14. CHECK EVAP CANISTER PURGE VOLUME CONTROL SOLENOID VALVE OPERATION

Without CONSULT-II

1. Start engine and warm it up to normal operating temperature.
2. Stop engine.
3. Disconnect vacuum hose to EVAP canister purge volume control solenoid valve at EVAP service port.
4. Start engine and let it idle for at least 80 seconds.
5. Check vacuum hose for vacuum when revving engine up to 2,000 rpm.

OK or NG

OK >> GO TO 17.
NG >> GO TO 15.

15. CHECK VACUUM HOSE

Check vacuum hoses for clogging or disconnection. Refer to EC-112, "Vacuum Hose Drawing" .

OK or NG

OK >> GO TO 16.
NG >> Repair or reconnect the hose.

16. CHECK EVAP CANISTER PURGE VOLUME CONTROL SOLENOID VALVE

Refer to EC-353, "Component Inspection" .

OK or NG

OK >> GO TO 17.
NG >> Replace EVAP canister purge volume control solenoid valve.

17. CHECK FUEL TANK TEMPERATURE SENSOR

Refer to EC-284, "Component Inspection" .

OK or NG

OK >> GO TO 18.
NG >> Replace fuel level sensor unit.

18. CHECK EVAP CONTROL SYSTEM PRESSURE SENSOR

Refer to EC-371, "Component Inspection" .

OK or NG

OK >> GO TO 19.
NG >> Replace EVAP control system pressure sensor.

19. CHECK EVAP PURGE LINE

Check EVAP purge line (pipe, rubber tube, fuel tank and EVAP canister) for cracks or improper connection.
Refer to EC-31, "EVAPORATIVE EMISSION LINE DRAWING" .

OK or NG

OK >> GO TO 20.
NG >> Repair or reconnect the hose.

20. CLEAN EVAP PURGE LINE

Clean EVAP purge line (pipe and rubber tube) using air blower.

>> GO TO 21.

21. CHECK EVAP/ORVR LINE

Check EVAP/ORVR line between EVAP canister and fuel tank for clogging, kink, looseness and improper connection. For location, refer to EC-37, "ON BOARD REFUELING VAPOR RECOVERY (ORVR)" .

OK or NG

OK >> GO TO 22.
NG >> Repair or replace hoses and tubes.

22. CHECK SIGNAL LINE AND RECIRCULATION LINE

Check signal line and recirculation line between filler neck tube and fuel tank for clogging, kink, cracks, looseness and improper connection.

OK or NG

OK >> GO TO 23.
NG >> Repair or replace hose, tube or filler neck tube.

23. CHECK REFUELING CONTROL VALVE

Refer to EC-41, "Component Inspection" .

OK or NG

OK >> GO TO 24.
NG >> Replace refueling control valve.

24. CHECK REFUELING EVAP VAPOR CUT VALVE

Refer to EC-41, "Component Inspection" .

OK or NG

OK >> GO TO 25.
NG >> Replace refueling EVAP vapor cut valve with fuel tank.

25. CHECK FUEL LEVEL SENSOR

Refer to FL-4, "FUEL LEVEL SENSOR UNIT, FUEL FILTER AND FUEL PUMP ASSEMBLY" .

OK or NG

OK >> GO TO 26.
NG >> Replace fuel level sensor unit.

26. CHECK INTERMITTENT INCIDENT

Refer to EC-153, "TROUBLE DIAGNOSIS FOR INTERMITTENT INCIDENT" .

>> **INSPECTION END**

Component Inspection

ABS00DAZ

WATER SEPARATOR

1. Check visually for insect nests in the water separator air inlet.
2. Check visually for cracks or flaws in the appearance.
3. Check visually for cracks or flaws in the hose.

4. Check that **A** and **C** are not clogged by blowing air into **B** with **A** , and then **C** plugged.
5. In case of NG in items 2 - 4, replace the parts.

   NOTE:
   Do not disassemble water separator.

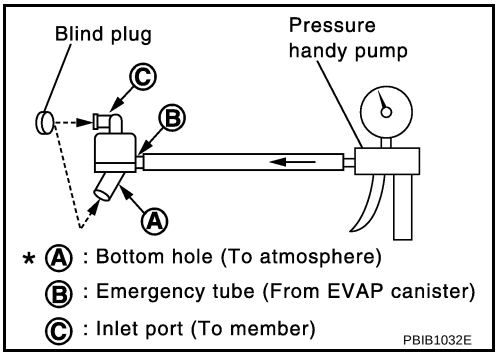

DTC P0460 FUEL LEVEL SENSOR

PFP:25060

Component Description

ABS00CRJ

The fuel level sensor is mounted in the fuel level sensor unit. The sensor detects a fuel level in the fuel tank and transmits a signal to the combination meter. The combination meter sends the fuel level sensor signal to the ECM through CAN communication line.
It consists of two parts, one is mechanical float and the other is variable resistor. Fuel level sensor output voltage changes depending on the movement of the fuel mechanical float.

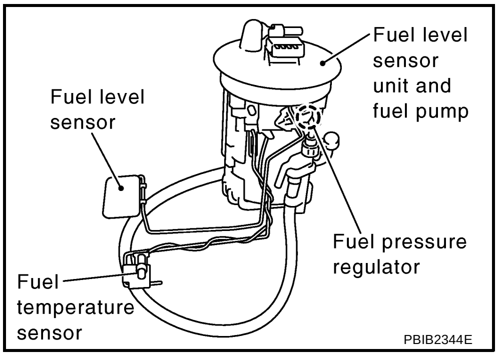

PBIB2344E

On Board Diagnostic Logic

ABS00CRK

NOTE:
If DTC P0460 is displayed with DTC U1000, U1001, first perform the trouble diagnosis for DTC U1000, U1001. Refer to EC-162, "DTC U1000, U1001 CAN COMMUNICATION LINE" .
When the vehicle is parked, naturally the fuel level in the fuel tank is stable. It means that output signal of the fuel level sensor does not change. If ECM senses sloshing signal from the sensor, fuel level sensor malfunction is detected.

DTC No.	Trouble diagnosis name	DTC detecting condition	Possible cause
P0460 0460	Fuel level sensor circuit noise	Even though the vehicle is parked, a signal being varied is sent from the fuel level sensor to ECM.	● Harness or connectors (The CAN communication line is open or shorted) ● Harness or connectors (The sensor circuit is open or shorted) ● Combination meter ● Fuel level sensor

DTC Confirmation Procedure

ABS00CRL

NOTE:
If DTC Confirmation Procedure has been previously conducted, always turn ignition switch OFF and wait at least 10 seconds before conducting the next test.

WITH CONSULT-II

1. Turn ignition switch ON.
2. Select “DATA MONITOR” mode with CONSULT-II.
3. Start engine and wait maximum of 2 consecutive minutes.
4. If 1st trip DTC is detected, go to EC-400, "Diagnostic Procedure" .

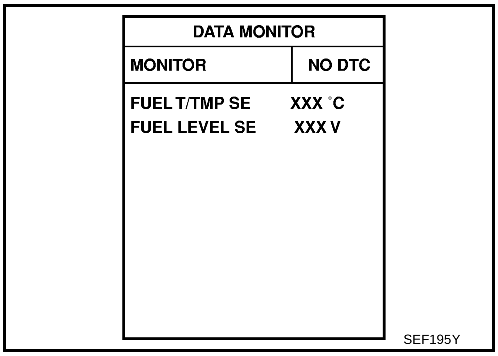

SEF195Y

WITH GST

Follow the procedure “WITH CONSULT-II” above.

Diagnostic Procedure

ABS00DAS

1. CHECK FUEL GAUGE OPERATION

Refer to DI-4, "ODO/TRIP METER, CLOCK AND AMBIENT TEMPERATURE INDICATOR" .

OK or NG

OK >> GO TO 2.
NG >> Follow the instruction of DI-4, "ODO/TRIP METER, CLOCK AND AMBIENT TEMPERATURE INDICATOR" .

2. CHECK FUEL LEVEL SENSOR AND CIRCUIT

Refer to DI-18, "Fuel Level Sensor Inspection" .

OK or NG

OK >> GO TO 3.
NG >> Repair or replace malfunctioning parts.

3. CHECK INTERMITTENT INCIDENT

Refer to EC-153, "TROUBLE DIAGNOSIS FOR INTERMITTENT INCIDENT" .

>> **INSPECTION END**

Removal and Installation

ABS00CRN

FUEL LEVEL SENSOR

Refer to FL-4, "FUEL LEVEL SENSOR UNIT, FUEL FILTER AND FUEL PUMP ASSEMBLY"

DTC P0461 FUEL LEVEL SENSOR

PFP:25060

Component Description

ABS00CRO

The fuel level sensor is mounted in the fuel level sensor unit. The sensor detects a fuel level in the fuel tank and transmits a signal to the combination meter. The combination meter sends the fuel level sensor signal to the ECM through CAN communication line.
It consists of two parts, one is mechanical float and the other is variable resistor. Fuel level sensor output voltage changes depending on the movement of the fuel mechanical float.

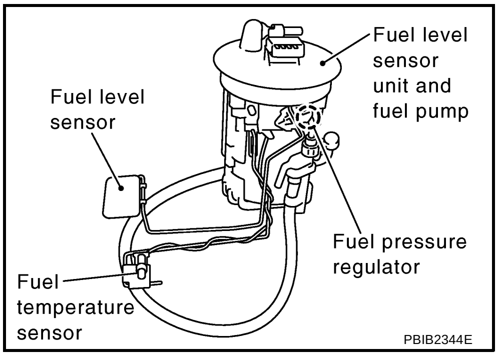

On Board Diagnostic Logic

ABS00CRP

NOTE:
If DTC P0461 is displayed with DTC U1000, U1001, first perform the trouble diagnosis for DTC U1000, U1001. Refer to EC-162, "DTC U1000, U1001 CAN COMMUNICATION LINE" .
Driving long distances naturally affect fuel gauge level.
This diagnosis detects the fuel gauge malfunction of the gauge not moving even after a long distance has been driven.

DTC No.	Trouble diagnosis name	DTC detecting condition	Possible cause
P0461 0461	Fuel level sensor circuit range/performance	The output signal of the fuel level sensor does not change within the specified range even though the vehicle has been driven a long distance.	● Harness or connectors (the CAN communication line is open or shorted) ● Harness or connectors (The sensor circuit is open or shorted) ● Combination meter ● Fuel level sensor

Overall Function Check

ABS00CRQ

Use this procedure to check the overall function of the fuel level sensor function. During this check, a 1st trip DTC might not be confirmed.

WARNING:
When performing following procedure, be sure to observe the handling of the fuel. Refer to FL-11, "FUEL TANK" .
TESTING CONDITION:
Before starting overall function check, preparation of draining fuel and refilling fuel is required.

WITH CONSULT-II

NOTE:
Start from step 10, if it is possible to confirm that the fuel cannot be drained by 30 ℓ (7-7/8 US gal, 6-5/8 Imp gal) in advance.

1. Prepare a fuel container and a spare hose.
2. Release fuel pressure from fuel line, refer to EC-90, "FUEL PRESSURE RELEASE" .
3. Remove the fuel feed hose on the fuel level sensor unit.
4. Connect a spare fuel hose where the fuel feed hose was removed.

5. Turn ignition switch OFF and wait at least 10 seconds then turn ON.
6. Select “FUEL LEVEL SE” in “DATA MONITOR” mode with CONSULT-II.
7. Check “FUEL LEVEL SE” output voltage and note it.
8. Select “FUEL PUMP” in “ACTIVE TEST” mode with CONSULT-II.
9. Touch “ON” and drain fuel approximately 30ℓ (7-7/8 US gal, 6-5/8 Imp gal) and stop it.
10. Check “FUEL LEVEL SE” output voltage and note it.
11. Fill fuel into the fuel tank for 30ℓ (7-7/8 US gal, 6-5/8 Imp gal).
12. Check “FUEL LEVEL SE” output voltage and note it.
13. Confirm whether the voltage changes more than 0.03V during step 7 to 10 and 10 to 12.
    If NG, go to EC-402, "Diagnostic Procedure"

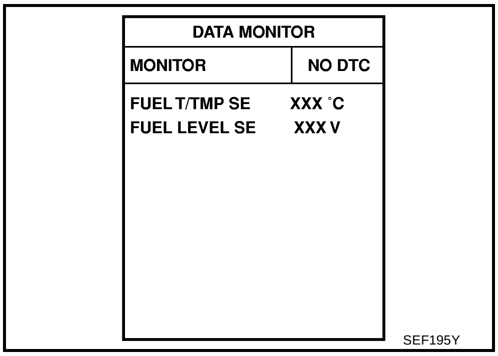

WITH GST

NOTE:
Start from step 8, if it is possible to confirm that the fuel cannot be drained by 30ℓ (7-7/8 US gal, 6-5/8 Imp gal) in advance.

1. Prepare a fuel container and a spare hose.
2. Release fuel pressure from fuel line, refer to EC-90, "FUEL PRESSURE RELEASE" .
3. Remove the fuel feed hose on the fuel level sensor unit.
4. Connect a spare fuel hose where the fuel feed hose was removed.
5. Turn ignition switch ON.
6. Drain fuel by 30ℓ (7-7/8 US gal, 6-5/8 Imp gal) from the fuel tank using proper equipment.
7. Confirm that the fuel gauge indication varies.
8. Fill fuel into the fuel tank for 30ℓ (7-7/8 US gal, 6-5/8 Imp gal).
9. Confirm that the fuel gauge indication varies.
10. If NG, go to EC-402, "Diagnostic Procedure" .

Diagnostic Procedure

ABS00DAT

1. CHECK FUEL GAUGE OPERATION

Refer to DI-4, "ODO/TRIP METER, CLOCK AND AMBIENT TEMPERATURE INDICATOR" .

OK or NG

OK >> GO TO 2.
NG >> Follow the instruction of DI-4, "ODO/TRIP METER, CLOCK AND AMBIENT TEMPERATURE INDICATOR" .

2. CHECK FUEL LEVEL SENSOR AND CIRCUIT

Refer to DI-18, "Fuel Level Sensor Inspection" .

OK or NG

OK >> GO TO 3.
NG >> Repair or replace malfunctioning parts.

3. CHECK INTERMITTENT INCIDENT

Refer to EC-153, "TROUBLE DIAGNOSIS FOR INTERMITTENT INCIDENT" .

>> **INSPECTION END**

Removal and Installation

ABS00CRS

FUEL LEVEL SENSOR

Refer to FL-4, "FUEL LEVEL SENSOR UNIT, FUEL FILTER AND FUEL PUMP ASSEMBLY" .

DTC P0462, P0463 FUEL LEVEL SENSOR

PFP:25060

Component Description

ABS00CRT

The fuel level sensor is mounted in the fuel level sensor unit. The sensor detects a fuel level in the fuel tank and transmits a signal to the combination meter. The combination meter. sends the fuel level sensor signal to the ECM through CAN communication.
It consists of two parts, one is mechanical float and the other is variable resistor. Fuel level sensor output voltage changes depending on the movement of the fuel mechanical float.

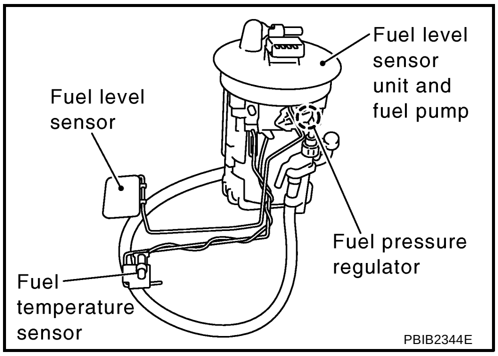

On Board Diagnostic Logic

ABS00CRU

NOTE:
If DTC P0462 or P0463 is displayed with DTC U1000, U1001, first perform the trouble diagnosis for DTC U1000, U1001. Refer to EC-162, "DTC U1000, U1001 CAN COMMUNICATION LINE" .

DTC No.	Trouble diagnosis name	DTC detecting condition	Possible cause
P0462 0462	Fuel level sensor circuit low input	An excessively low voltage from the sensor is sent to ECM.	● Harness or connectors (The CAN communication line is open or shorted) ● Harness or connectors (The sensor circuit is open or shorted) ● Combination meter ● Fuel level sensor
P0463 0463	Fuel level sensor circuit high input	An excessively high voltage from the sensor is sent to ECM.	

DTC Confirmation Procedure

ABS00CRV

NOTE:
If DTC Confirmation Procedure has been previously conducted, always turn ignition switch OFF and wait at least 10 seconds before conducting the next test.
TESTING CONDITION:
Before performing the following procedure, confirm that battery voltage is more than 11V at ignition switch ON.

WITH CONSULT-II

1. Turn ignition switch ON.
2. Select “DATA MONITOR” mode with CONSULT-II.
3. Wait at least 5 seconds.
4. If 1st trip DTC is detected, go to EC-404, "Diagnostic Procedure" .

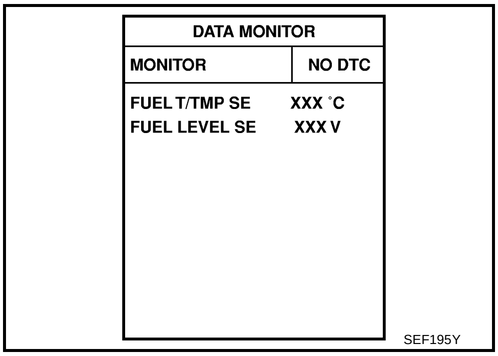

WITH GST

Follow the procedure “WITH CONSULT-II” above.

Diagnostic Procedure

ABS00DAU

1. CHECK FUEL GAUGE OPERATION

Refer to DI-4, "ODO/TRIP METER, CLOCK AND AMBIENT TEMPERATURE INDICATOR" .

OK or NG

OK >> GO TO 2.
NG >> Follow the instruction of DI-4, "ODO/TRIP METER, CLOCK AND AMBIENT TEMPERATURE INDICATOR" .

2. CHECK FUEL LEVEL SENSOR AND CIRCUIT

Refer to DI-18, "Fuel Level Sensor Inspection" .

OK or NG

OK >> GO TO 3.
NG >> Repair or replace malfunctioning parts.

3. CHECK INTERMITTENT INCIDENT

Refer to EC-153, "TROUBLE DIAGNOSIS FOR INTERMITTENT INCIDENT" .

>> **INSPECTION END**

Removal and Installation

ABS00CRX

FUEL LEVEL SENSOR

Refer to FL-4, "FUEL LEVEL SENSOR UNIT, FUEL FILTER AND FUEL PUMP ASSEMBLY" .

DTC P0500 VSS

PFP:32702

Description

ABS00CRY

NOTE:
If DTC P0500 is displayed with DTC U1000 or U1001, first perform the trouble diagnosis for DTC U1000, U1001. Refer to **EC-162, "DTC U1000, U1001 CAN COMMUNICATION LINE"** **.**
The vehicle speed sensor is installed in the transaxle. It contains a pulse generator which provides a vehicle speed signal to the combination meter. The combination meter then sends a signal to the ECM through CAN communication line.

On Board Diagnosis Logic

ABS00CRZ

DTC No.	Trouble diagnosis name	DTC detecting condition	Possible cause
P0500 0500	Vehicle speed sensor	The almost 0 km/h (0 MPH) signal from vehicle speed sensor is sent to ECM even when vehicle is being driven.	• Harness or connectors (The CAN communication line is open or shorted) • Harness or connectors (The wheel sensor circuit is open or shorted) • Wheel sensor • Combination meter • VDC/TCS/ABS control unit (with VDC models) • ABS actuator and electric unit (control unit) (without VDC models)

DTC Confirmation Procedure

ABS00CS0

CAUTION:
Always drive vehicle at a safe speed.

NOTE:
If DTC Confirmation Procedure has been previously conducted, always turn ignition switch OFF and wait at least 10 seconds before conducting the next test.
TESTING CONDITION:
Steps 1 and 2 may be conducted with the drive wheels lifted in the shop or by driving the vehicle. If a road test is expected to be easier, it is unnecessary to lift the vehicle.

WITH CONSULT-II

1. Start engine.
2. Read “VHCL SPEED SE” in “DATA MONITOR” mode with CONSULT-II. The vehicle speed on CONSULT-II should exceed 10 km/h (6 MPH) when rotating wheels with suitable gear position.
   If NG, go to EC-406, "Diagnostic Procedure" .
   If OK, go to following step.
3. Select “DATA MONITOR” mode with CONSULT-II.
4. Warm engine up to normal operating temperature.
5. Maintain the following conditions for at least 60 consecutive seconds.

ENG SPEED	1,750 - 6,000 rpm (A/T) 2,000 - 6,000 rpm (M/T)
COOLAN TEMP/S	More than 70°C (158°F)
B/FUEL SCHDL	6.0 - 31.8 msec (A/T) 5.0 - 31.8 msec (M/T)
Shift lever	Suitable position
PW/ST SIGNAL	OFF

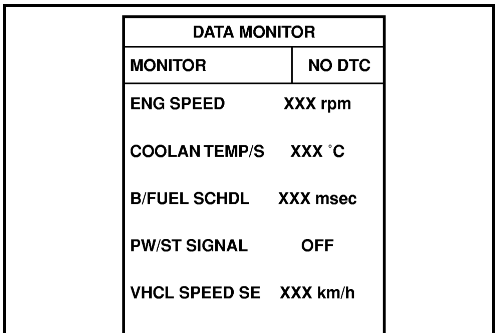

SEF196Y

6. If 1st trip DTC is detected, go to EC-406, "Diagnostic Procedure" .

Overall Function Check

ABS00CS1

Use this procedure to check the overall function of the vehicle speed sensor circuit. During this check, a 1st trip DTC might not be confirmed.

WITH GST

1. Lift up drive wheels.
2. Start engine.
3. Read vehicle speed sensor signal in Service $01 with GST.
   The vehicle speed sensor on GST should be able to exceed 10 km/h (6 MPH) when rotating wheels with suitable gear position.
4. If NG, go to EC-406, "Diagnostic Procedure" .

Diagnostic Procedure

ABS00DAV

1. CHECK DTC WITH “VDC/TCS/ABS CONTROL UNIT (WITH VDC MODELS)” OR “ABS ACTUATOR AND ELECTRIC UNIT (CONTROL UNIT) (WITHOUT VDC MODELS)”

Refer to BRC-48, "TROUBLE DIAGNOSIS" (with VDC models) or refer to BRC-9, "TROUBLE DIAGNOSIS" (without VDC models).

OK or NG

OK >> GO TO 2.
NG >> Repair or replace.

2. CHECK COMBINATION METER

Check combination meter function.
Refer to DI-4, "COMBINATION METERS" .

>> **INSPECTION END**

DTC P0506 ISC SYSTEM

PFP:23781

Description

ABS00CS3

NOTE:

If DTC P0506 is displayed with other DTC, first perform the trouble diagnosis for the other DTC displayed.

The ECM controls the engine idle speed to a specified level through the fine adjustment of the air, which is let into the intake manifold, by operating the electric throttle control actuator. The operating of the throttle valve is varied to allow for optimum control of the engine idling speed. The crankshaft position sensor (POS) detects the actual engine speed and sends a signal to the ECM.

The ECM controls the electric throttle control actuator so that the engine speed coincides with the target value memorized in the ECM. The target engine speed is the lowest speed at which the engine can operate steadily. The optimum value stored in the ECM is determined by taking into consideration various engine conditions, such as during warming up, deceleration, and engine load (air conditioner, power steering and cooling fan operation, etc.).

On Board Diagnosis Logic

ABS00CS4

DTC No.	Trouble diagnosis name	DTC detecting condition	Possible cause
P0506 0506	Idle speed control system RPM lower than expected	The idle speed is less than the target idle speed by 100 rpm or more.	● Electric throttle control actuator ● Intake air leak

DTC Confirmation Procedure

ABS00CS5

NOTE:

- If DTC Confirmation Procedure has been previously conducted, always turn ignition switch OFF and wait at least 10 seconds before conducting the next test.
- **If the target idle speed is out of the specified value, perform** EC-88, "Idle Air Volume Learning" **, before conducting DTC Confirmation Procedure. For the target idle speed, refer to the** EC-663, "SERVICE DATA AND SPECIFICATIONS (SDS)"

TESTING CONDITION:

- **Before performing the following procedure, confirm that battery voltage is more than 11V at idle.**
- **Always perform the test at a temperature above –10°C (14°F).**

WITH CONSULT-II

1. Open engine hood.
2. Start engine and warm it up to normal operating temperature.
3. Turn ignition switch OFF and wait at least 10 seconds.
4. Turn ignition switch ON again and select “DATA MONITOR” mode with CONSULT-II.
5. Start engine and run it for at least 1 minute at idle speed.
6. If 1st trip DTC is detected, go to EC-408, "Diagnostic Procedure" .

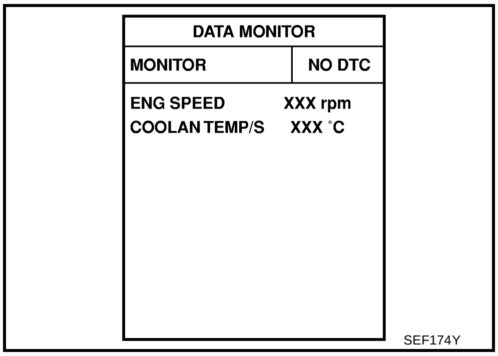

SEF174Y

WITH GST

Follow the procedure “WITH CONSULT-II” above.

A EC C D E F G H I J K L M

Diagnostic Procedure

ABS00CS6

1. CHECK INTAKE AIR LEAK

1. Start engine and let it idle.
2. Listen for an intake air leak after the mass air flow sensor.

OK or NG

OK >> GO TO 2.
NG >> Discover air leak location and repair.

2. REPLACE ECM

1. Stop engine.
2. Replace ECM.
3. Perform initialization of NVIS (NATS) system and registration of all NVIS (NATS) ignition key IDs. Refer to EC-46, "NVIS (NISSAN VEHICLE IMMOBILIZER SYSTEM-NATS)" .
4. Perform EC-87, "VIN Registration" .
5. Perform EC-88, "Accelerator Pedal Released Position Learning" .
6. Perform EC-88, "Throttle Valve Closed Position Learning" .
7. Perform EC-88, "Idle Air Volume Learning" .

>> **INSPECTION END**

DTC P0507 ISC SYSTEM

PFP:23781

Description

ABS00CS7

NOTE:

If DTC P0507 is displayed with other DTC, first perform the trouble diagnosis for the other DTC displayed.

The ECM controls the engine idle speed to a specified level through the fine adjustment of the air, which is let into the intake manifold, by operating the electric throttle control actuator. The operating of the throttle valve is varied to allow for optimum control of the engine idling speed. The crankshaft position sensor (POS) detects the actual engine speed and sends a signal to the ECM.

The ECM controls the electric throttle control actuator so that the engine speed coincides with the target value memorized in the ECM. The target engine speed is the lowest speed at which the engine can operate steadily. The optimum value stored in the ECM is determined by taking into consideration various engine conditions, such as during warming up, deceleration, and engine load (air conditioner, power steering and cooling fan operation, etc.).

On Board Diagnosis Logic

ABS00CS8

DTC No.	Trouble diagnosis name	DTC detecting condition	Possible cause
P0507 0507	Idle speed control system RPM higher than expected	The idle speed is more than the target idle speed by 200 rpm or more.	● Electric throttle control actuator ● Intake air leak ● PCV system

DTC Confirmation Procedure

ABS00CS9

NOTE:

- If DTC Confirmation Procedure has been previously conducted, always turn ignition switch OFF and wait at least 10 seconds before conducting the next test.
- **If the target idle speed is out of the specified value, perform** EC-88, "Idle Air Volume Learning" **, before conducting DTC Confirmation Procedure. For the target idle speed, refer to the** EC-663, "SERVICE DATA AND SPECIFICATIONS (SDS)" **.**

TESTING CONDITION:

- **Before performing the following procedure, confirm that battery voltage is more than 11V at idle.**
- **Always perform the test at a temperature above –10°C (14°F).**

WITH CONSULT-II

1. Open engine hood.
2. Start engine and warm it up to normal operating temperature.
3. Turn ignition switch OFF and wait at least 10 seconds.
4. Turn ignition switch ON again and select “DATA MONITOR” mode with CONSULT-II.
5. Start engine and run it for at least 1 minute at idle speed.
6. If 1st trip DTC is detected, go to EC-410, "Diagnostic Procedure" .

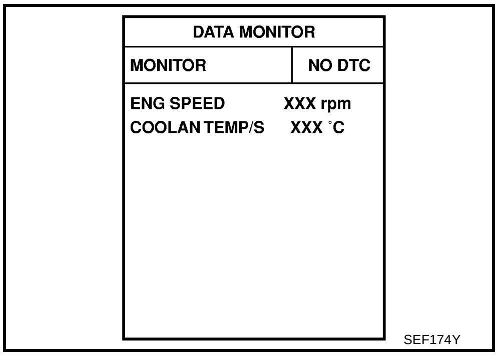

SEF174Y

WITH GST

Follow the procedure “WITH CONSULT-II” above.

Diagnostic Procedure

ABS00CSA

1. CHECK PCV HOSE CONNECTION

Confirm that PCV hose is connected correctly.

OK or NG

OK >> GO TO 2.
NG >> Repair or replace.

2. CHECK INTAKE AIR LEAK

1. Start engine and let it idle.
2. Listen for an intake air leak after the mass air flow sensor.

OK or NG

OK >> GO TO 3.
NG >> Discover air leak location and repair.

3. REPLACE ECM

1. Stop engine.
2. Replace ECM.
3. Perform initialization of NVIS (NATS) system and registration of all NVIS (NATS) ignition key IDs. Refer to EC-46, "NVIS (NISSAN VEHICLE IMMOBILIZER SYSTEM-NATS)" .
4. Perform EC-87, "VIN Registration" .
5. Perform EC-88, "Accelerator Pedal Released Position Learning" .
6. Perform EC-88, "Throttle Valve Closed Position Learning" .
7. Perform EC-88, "Idle Air Volume Learning" .

>> **INSPECTION END**

DTC P0550 PSP SENSOR

PFP:49763

Component Description

ABS00CSB

Power steering pressure (PSP) sensor is installed to the power steering high-pressure tube and detects a power steering load. This sensor is a potentiometer which transforms the power steering load into output voltage, and emits the voltage signal to the ECM. The ECM controls the electric throttle control actuator and adjusts the throttle valve opening angle to increase the engine speed and adjusts the idle speed for the increased load.

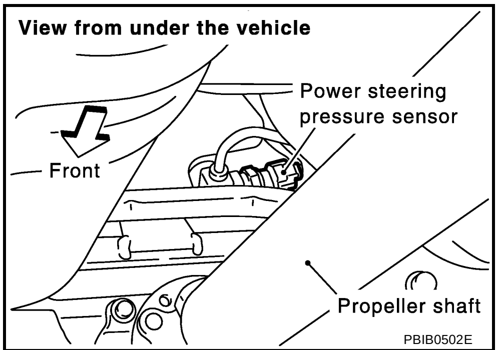

PBIB0502E

CONSULT-II Reference Value in Data Monitor Mode

ABS00CSC

Specification data are reference values.

MONITOR ITEM	CONDITION		SPECIFICATION
PW/ST SIGNAL	● Engine: After warming up, idle the engine	Steering wheel: Not being turned. (Forward direction)	OFF
		Steering wheel: Being turned.	ON

On Board Diagnosis Logic

ABS00CSD

The MIL will not light up for this diagnosis.

NOTE:
If DTC P0550 is displayed with DTC P1229, first perform the trouble diagnosis for DTC P1229. Refer to EC-499 .

DTC No.	Trouble diagnosis name	DTC detecting condition	Possible cause
P0550 0550	Power steering pressure sensor circuit	An excessively low or high voltage from the sensor is sent to ECM.	● Harness or connectors (The sensor circuit is open or shorted.) ● Power steering pressure sensor

DTC Confirmation Procedure

ABS00CSE

NOTE:
If DTC Confirmation Procedure has been previously conducted, always turn ignition switch OFF and wait at least 10 seconds before conducting the next test.

WITH CONSULT-II

1. Turn ignition switch ON.
2. Select “DATA MONITOR” mode with CONSULT-II.
3. Start engine and let it idle for at least 5 seconds.
4. If 1st trip DTC is detected, go to EC-413, "Diagnostic Procedure" .

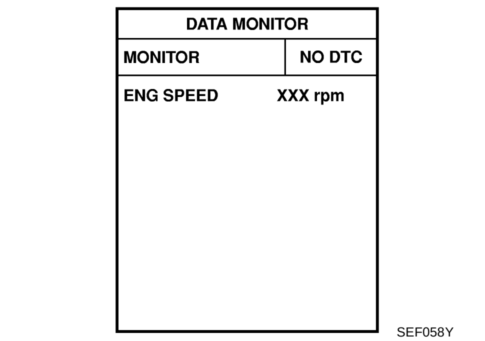

SEF058Y

WITH GST

Follow the procedure “WITH CONSULT-II” above.

Wiring Diagram

ABS00CSF

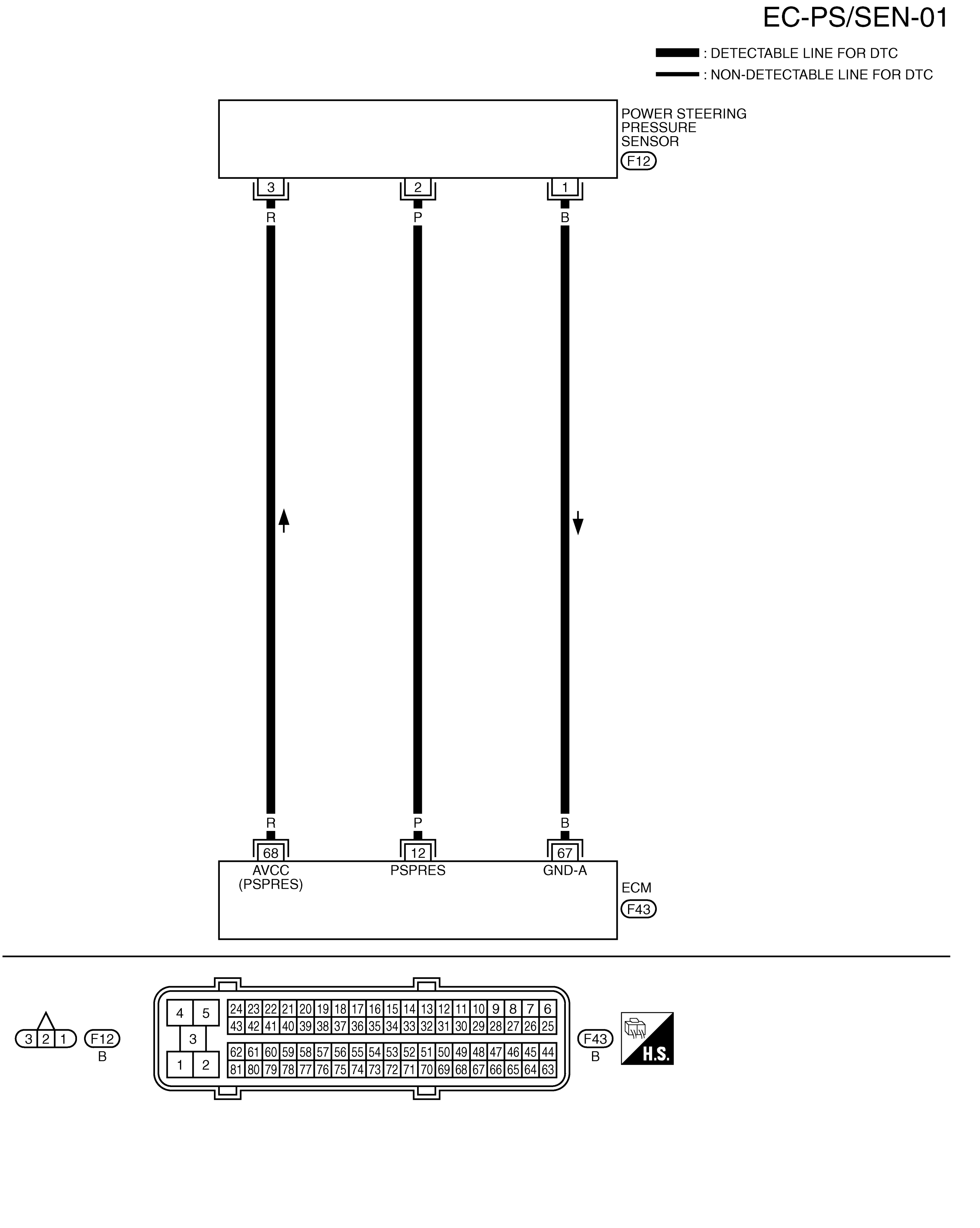

Specification data are reference values and are measured between each terminal and ground.

CAUTION:

Do not use ECM ground terminals when measuring input/output voltage. Doing so may result in damage to the ECM's transistor. Use a ground other than ECM terminals, such as the ground.

TERMINAL NO.	WIRE COLOR	ITEM	CONDITION	DATA (DC Voltage)
12	P	Power steering pressure sensor	**[Engine is running]** ● Steering wheel: Being turned	0.5 - 4.0V
			[Engine is running] ● Steering wheel: Not being turned	0.4 - 0.8V
67	B	Sensor ground	**[Engine is running]** ● **Warm-up condition** ● Idle speed	Approximately 0V
68	R	Sensor power supply (Power steering pressure sensor)	**[Ignition switch: ON]**	Approximately 5V

Diagnostic Procedure

ABS00D8H

1. CHECK GROUND CONNECTIONS

1. Turn ignition switch OFF.
2. Loosen and retighten ground three screws on the body.
   Refer to EC-161, "Ground Inspection" .

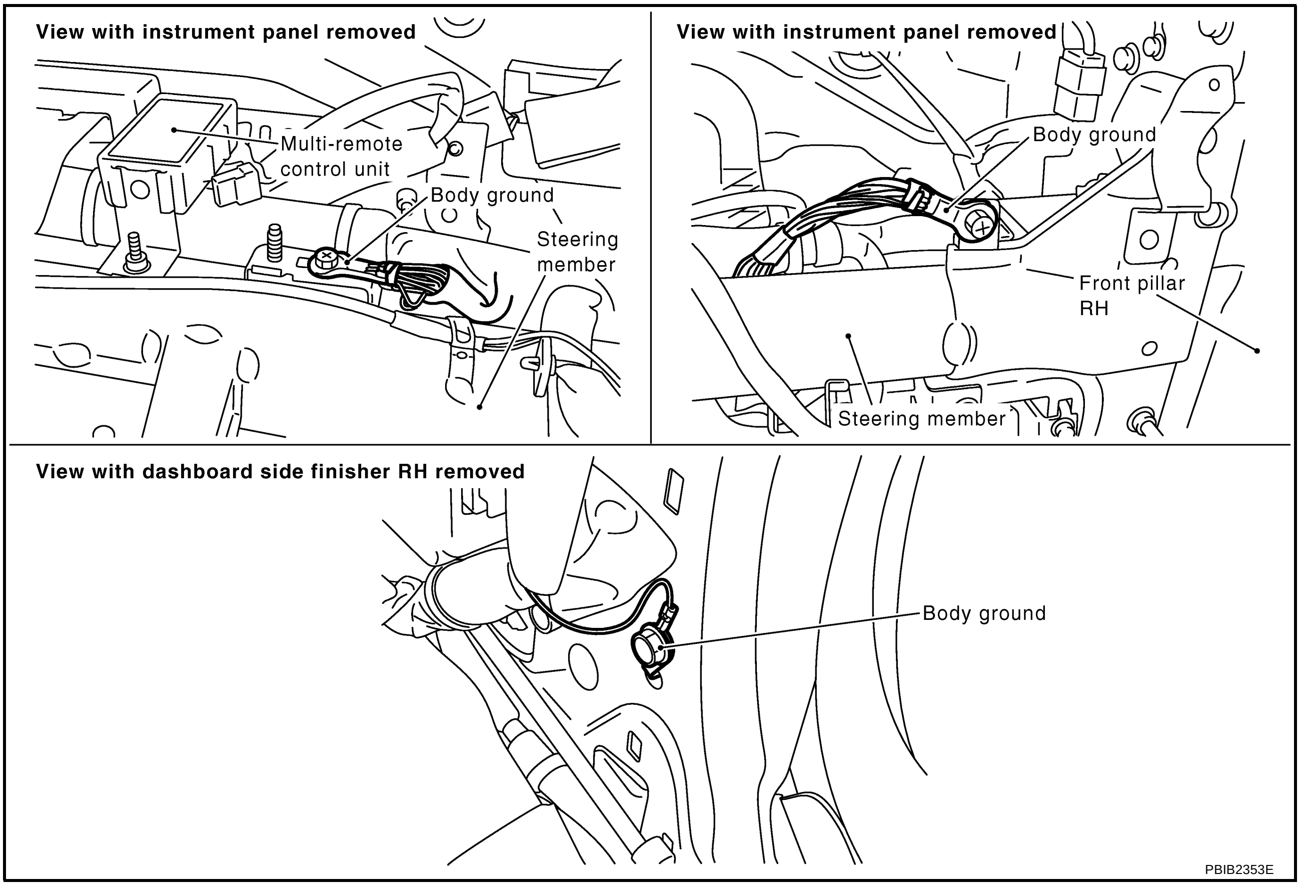

OK or NG

OK >> GO TO 2.
NG >> Repair or replace ground connections.

2. CHECK PSP SENSOR POWER SUPPLY CIRCUIT

1. Disconnect power steering pressure (PSP) sensor harness connector.
2. Turn ignition switch ON.

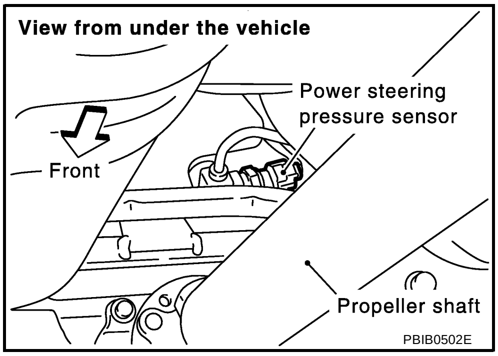

3. Check voltage between PSP sensor terminal 3 and ground with CONSULT-II or tester.

Voltage: Approximately 5V

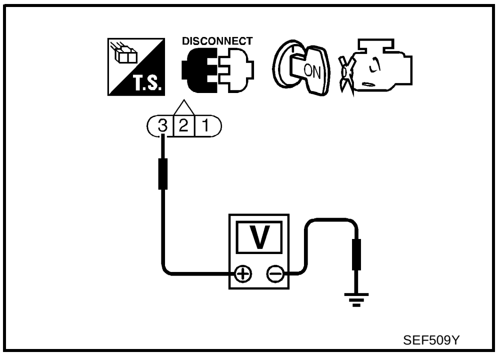

OK or NG

OK >> GO TO 3.
NG >> Repair open circuit or short to ground or short to power in harness or connectors.

3. CHECK PSP SENSOR GROUND CIRCUIT FOR OPEN AND SHORT

1. Turn ignition switch OFF.
2. Disconnect ECM harness connector.
3. Check harness continuity between PSP sensor terminal 1 and ECM terminal 67. Refer to Wiring Diagram.

Continuity should exist.

4. Also check harness for short to ground and short to power.

OK or NG

OK >> GO TO 4.
NG >> Repair open circuit or short to ground or short to power in harness or connectors.

4. CHECK PSP SENSOR INPUT SIGNAL CIRCUIT FOR OPEN AND SHORT

1. Check harness continuity between PSP sensor terminal 2 and ECM terminal 12.

Continuity should exist.

2. Also check harness for short to ground and short to power.

OK or NG

OK >> GO TO 5.
NG >> Repair open circuit or short to ground or short to power in harness or connectors.

5. CHECK PSP SENSOR

Refer to EC-415, "Component Inspection" .

OK or NG

OK >> GO TO 6.
NG >> Replace PSP sensor.

6. CHECK INTERMITTENT INCIDENT

Refer to EC-153, "TROUBLE DIAGNOSIS FOR INTERMITTENT INCIDENT" .

>> **INSPECTION END**

Component Inspection

ABS00CSH

POWER STEERING PRESSURE SENSOR

1. Reconnect all harness connectors disconnected.
2. Start engine and let it idle.
3. Check voltage between ECM terminal 12 and ground under the following conditions.

Condition	Voltage
Steering wheel: Being turned fully.	0.5 - 4.5V
Steering wheel: Not being turned.	0.4 - 0.8V

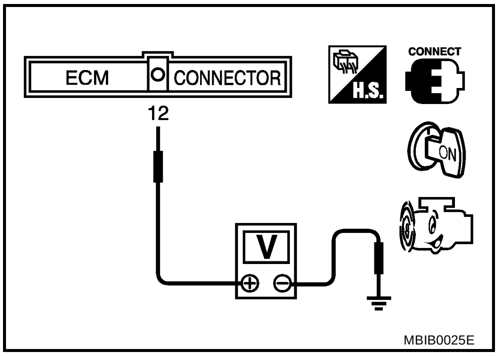

MBIB0025E

Removal and Installation

ABS00DAW

POWER STEERING PRESSURE SENSOR

Refer to PS-33, "HYDRAULIC LINE" .

DTC P0605 ECM

PFP:23710

Component Description

ABS00CSI

The ECM consists of a microcomputer and connectors for signal input and output and for power supply. The ECM controls the engine.

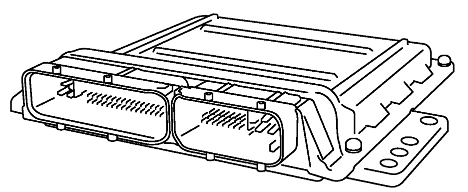

PBIB1164E

On Board Diagnosis Logic

ABS00CSJ

This self-diagnosis has one or two trip detection logic.

DTC No.	Trouble diagnosis name	DTC detecting condition		Possible cause
P0605 0605	Engine control module	A)	ECM calculation function is malfunctioning.	● ECM
		B)	ECM EEP-ROM system is malfunctioning.	
		C)	ECM self shut-off function is malfunctioning.	

FAIL-SAFE MODE

ECM enters fail-safe mode when malfunction A is detected.

Detected items	Engine operation condition in fail-safe mode
Malfunction A	● ECM stops the electric throttle control actuator control, throttle valve is maintained at a fixed opening (approx. 5 degrees) by the return spring. ● ECM deactivates ASCD operation.

DTC Confirmation Procedure

ABS00CSK

Perform PROCEDURE FOR MALFUNCTION A first. If the 1st trip DTC cannot be confirmed, perform PROCEDURE FOR MALFUNCTION B. If there is no malfunction on PROCEDURE FOR MALFUNCTION B, perform PROCEDURE FOR MALFUNCTION C.

NOTE:

If DTC Confirmation Procedure has been previously conducted, always turn ignition switch OFF and wait at least 10 seconds before conducting the next test.

PROCEDURE FOR MALFUNCTION A

With CONSULT-II

1. Turn ignition switch ON.
2. Select "DATA MONITOR" mode with CONSULT-II.
3. If 1st trip DTC is detected, go to EC-417, "Diagnostic Procedure" .

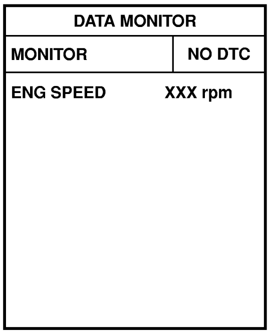

SEF058Y

With GST

Follow the procedure "With CONSULT-II" above.

PROCEDURE FOR MALFUNCTION B

With CONSULT-II

1. Turn ignition switch ON and wait at least 1 second.
2. Select “DATA MONITOR” mode with CONSULT-II.
3. Turn ignition switch OFF, wait at least 10 seconds, and then turn ON.
4. If 1st trip DTC is detected, go to EC-417, "Diagnostic Procedure" .

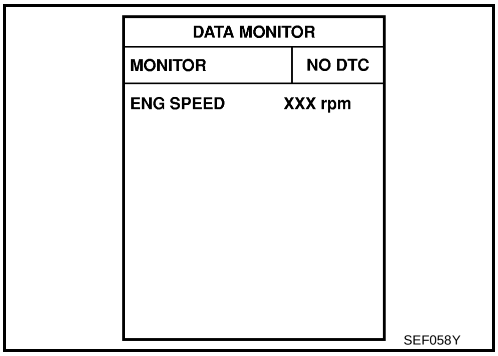

With GST

Follow the procedure “With CONSULT-II” above.

PROCEDURE FOR MALFUNCTION C

With CONSULT-II

1. Turn ignition switch ON and wait at least 1 second.
2. Select “DATA MONITOR” mode with CONSULT-II.
3. Turn ignition switch OFF, wait at least 10 seconds, and then turn ON.
4. Repeat step 3 for 32 times.
5. If 1st trip DTC is detected, go to EC-417, "Diagnostic Procedure" .

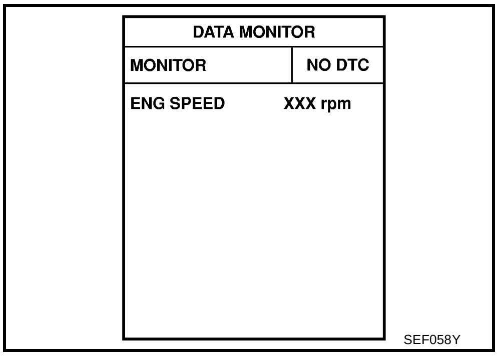

With GST

Follow the procedure “With CONSULT-II” above.

Diagnostic Procedure

ABS00CSL

1. INSPECTION START

With CONSULT-II

1. Turn ignition switch ON.
2. Select “SELF DIAG RESULTS” mode with CONSULT-II.
3. Touch “ERASE”.
4. **Perform DTC Confirmation Procedure.**
   See EC-416 .
5. Is the 1st trip DTC P0605 displayed again?

With GST

1. Turn ignition switch ON.
2. Select Service $04 with GST.
3. Touch “ERASE”.
4. **Perform DTC Confirmation Procedure.**
   See EC-416 .
5. Is the 1st trip DTC P0605 displayed again?

Yes or No

Yes >> GO TO 2.
No >> **INSPECTION END**

2. REPLACE ECM

1. Replace ECM.
2. Perform initialization of NVIS (NATS) system and registration of all NVIS (NATS) ignition key IDs. Refer to EC-46, "NVIS (NISSAN VEHICLE IMMOBILIZER SYSTEM-NATS)" .
3. Perform EC-87, "VIN Registration" .
4. Perform EC-88, "Accelerator Pedal Released Position Learning" .
5. Perform EC-88, "Throttle Valve Closed Position Learning" .
6. Perform EC-88, "Idle Air Volume Learning" .

>> **INSPECTION END**

DTC P1065 ECM POWER SUPPLY

PFP:23710

A

Component Description

ABS00CSU

EC

Battery voltage is supplied to the ECM even when the ignition switch is turned OFF for the ECM memory function of the DTC memory, the air-fuel ratio feedback compensation value memory, the Idle Air Volume Learning value memory, etc.

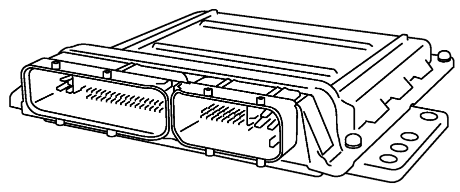

PBIB1164E

C
D
E

On Board Diagnosis Logic

ABS00CSV

DTC No.	Trouble diagnosis name	DTC detecting condition	Possible cause
P1065 1065	ECM power supply circuit	ECM back-up RAM system does not function properly.	● Harness or connectors [The ECM power supply (back-up) circuit is open or shorted.] ● ECM

F
G

DTC Confirmation Procedure

ABS00CSW

H

NOTE:
If DTC Confirmation Procedure has been previously conducted, always turn ignition switch OFF and wait at least 10 seconds before conducting the next test.

I

WITH CONSULT-II

1. Turn ignition switch ON and wait at least 1 second.
2. Select “DATA MONITOR” mode with CONSULT-II.
3. Start engine and let it idle for 1 second.
4. Turn ignition switch OFF, wait at least 10 seconds, and then turn ON.
5. Repeat steps 3 and 4 for four times.
6. If 1st trip DTC is detected, go to EC-421, "Diagnostic Procedure" .

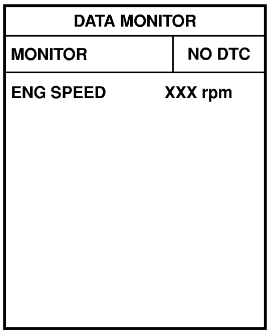

SEF058Y

J
K
L
M

WITH GST

Follow the procedure “WITH CONSULT-II” above.

Wiring Diagram

ABS00CSX

EC-ECM/PW-01

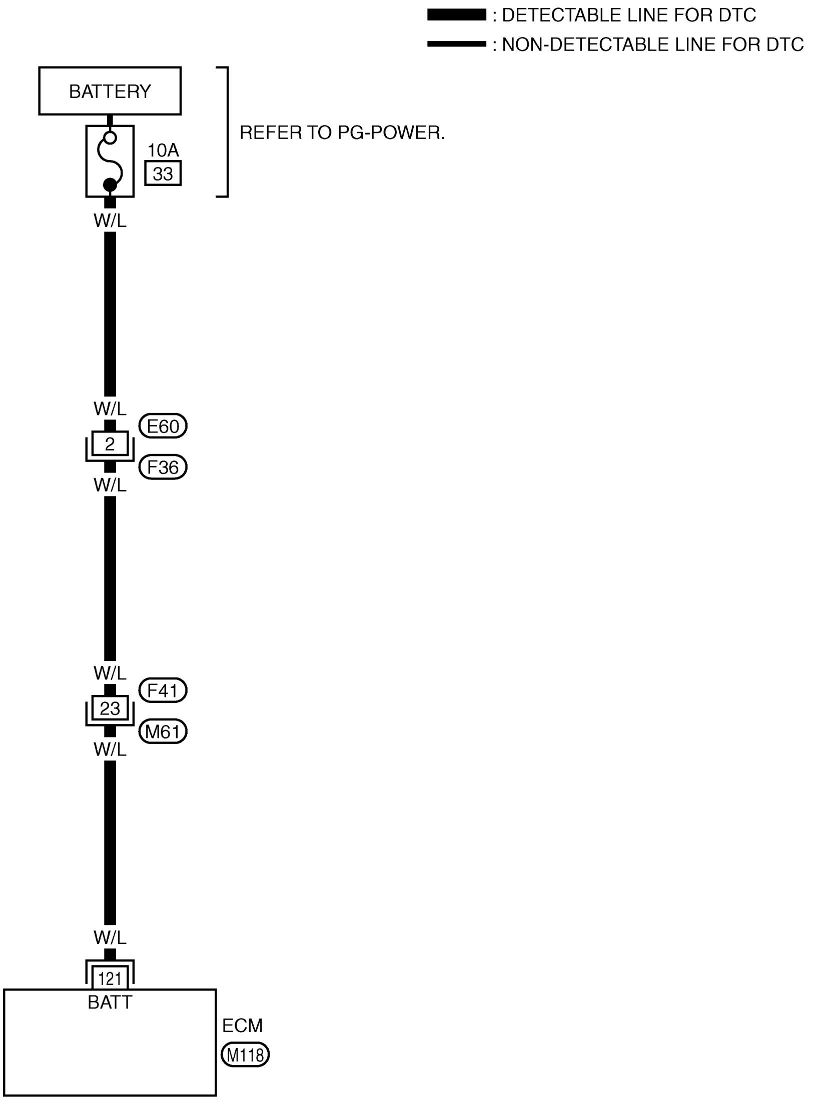

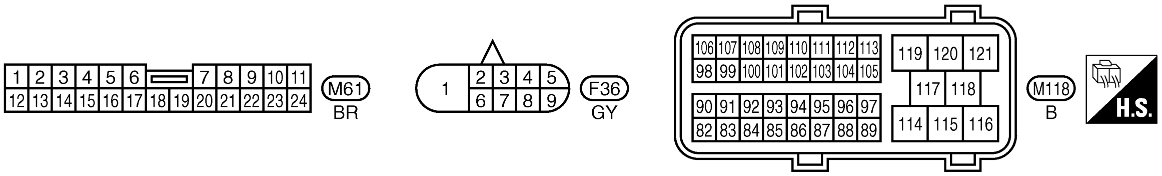

TBWA0611E

Specification data are reference values and are measured between each terminal and ground.

CAUTION:

Do not use ECM ground terminals when measuring input/output voltage. Doing so may result in damage to the ECM's transistor. Use a ground other than ECM terminals, such as the ground.

TERMINAL NO.	WIRE COLOR	ITEM	CONDITION	DATA (DC Voltage)
121	W/L	Power supply for ECM (Back-up)	**[Ignition switch: OFF]**	BATTERY VOLTAGE (11 - 14V)

Diagnostic Procedure

ABS00D8I

1. CHECK ECM POWER SUPPLY

1. Turn ignition switch OFF.
2. Check voltage between ECM terminal 121 and ground with CONSULT-II or tester.

Voltage: Battery voltage

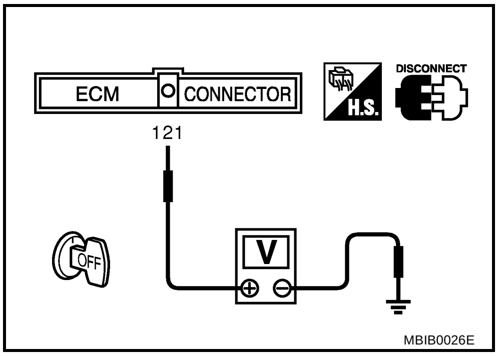

MBIB0026E

OK or NG

OK >> GO TO 3.
NG >> GO TO 2.

2. DETECT MALFUNCTIONING PART

Check the following.

- Harness connectors E60, M36
- Harness connectors F41, M61
- 10A fuse
- Harness for open or short between ECM and battery

>> Repair open circuit or short to ground or short to power in harness or connectors.

3. CHECK INTERMITTENT INCIDENT

Refer to EC-153, "TROUBLE DIAGNOSIS FOR INTERMITTENT INCIDENT" .

OK or NG

OK >> GO TO 4.
NG >> Repair or replace harness or connectors.

4. PERFORM DTC CONFIRMATION PROCEDURE

With CONSULT-II

1. Turn ignition switch ON.
2. Select “SELF DIAG RESULTS” mode with CONSULT-II.
3. Touch “ERASE”.
4. **Perform DTC Confirmation Procedure.**
   See EC-419 .
5. Is the 1st trip DTC P1065 displayed again?

With GST

1. Turn ignition switch ON.
2. Select Service $04 with GST.
3. Touch “ERASE”.
4. **Perform DTC Confirmation Procedure.**
   See EC-419 .
5. Is the 1st trip DTC P1065 displayed again?

Yes or No

Yes >> GO TO 5.
No >> **INSPECTION END**

5. REPLACE ECM

1. Replace ECM.
2. Perform initialization of NVIS (NATS) system and registration of all NVIS (NATS) ignition key IDs. Refer to EC-46, "NVIS (NISSAN VEHICLE IMMOBILIZER SYSTEM-NATS)" .
3. Perform EC-87, "VIN Registration" .
4. Perform EC-88, "Accelerator Pedal Released Position Learning" .
5. Perform EC-88, "Throttle Valve Closed Position Learning" .
6. Perform EC-88, "Idle Air Volume Learning" .

>> **INSPECTION END**

DTC P1111 IVT CONTROL SOLENOID VALVE

PFP:23796

Component Description

ABS00CSZ

Intake valve timing control solenoid valve is activated by ON/OFF pulse duty (ratio) signals from the ECM.
The intake valve timing control solenoid valve changes the oil amount and direction of flow through intake valve timing control unit or stops oil flow.
The longer pulse width advances valve angle.
The shorter pulse width retards valve angle.
When ON and OFF pulse widths become equal, the solenoid valve stops oil pressure flow to fix the intake valve angle at the control position.

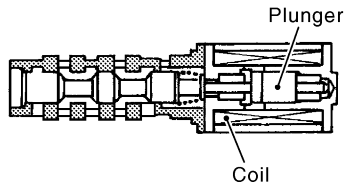

PBIB1842E

CONSULT-II Reference Value in Data Monitor Mode

ABS00CT0

Specification data are reference values.

MONITOR ITEM	CONDITION		SPECIFICATION
INT/V SOL (B1)	● Engine: After warming up ● Shift lever: P or N (A/T), Neutral (M/T) ● Air conditioner switch: OFF ● No-load	Idle	0% - 2%
		When revving engine up to 2,000 rpm quickly.	Approx. 0% - 50%

On Board Diagnosis Logic

ABS00CT1

DTC No.	Trouble diagnosis name	DTC detecting condition	Possible cause
P1111 1111	Intake valve timing control solenoid valve circuit	An improper voltage is sent to the ECM through intake valve timing control solenoid valve.	● Harness or connectors (Intake valve timing control solenoid valve circuit is open or shorted.) ● Intake valve timing control solenoid valve

DTC Confirmation Procedure

ABS00CT2

NOTE:
If DTC Confirmation Procedure has been previously conducted, always turn ignition switch OFF and wait at least 10 seconds before conducting the next test.

WITH CONSULT-II

1. Turn ignition switch ON.
2. Select “DATA MONITOR” mode with CONSULT-II.
3. Start engine and let it idle for 5 seconds.
4. If 1st trip DTC is detected, go to EC-425, "Diagnostic Procedure" .

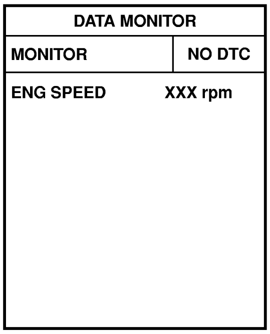

SEF058Y

WITH GST

Following the procedure “WITH CONSULT-II” above.

Wiring Diagram

ABS00CT3

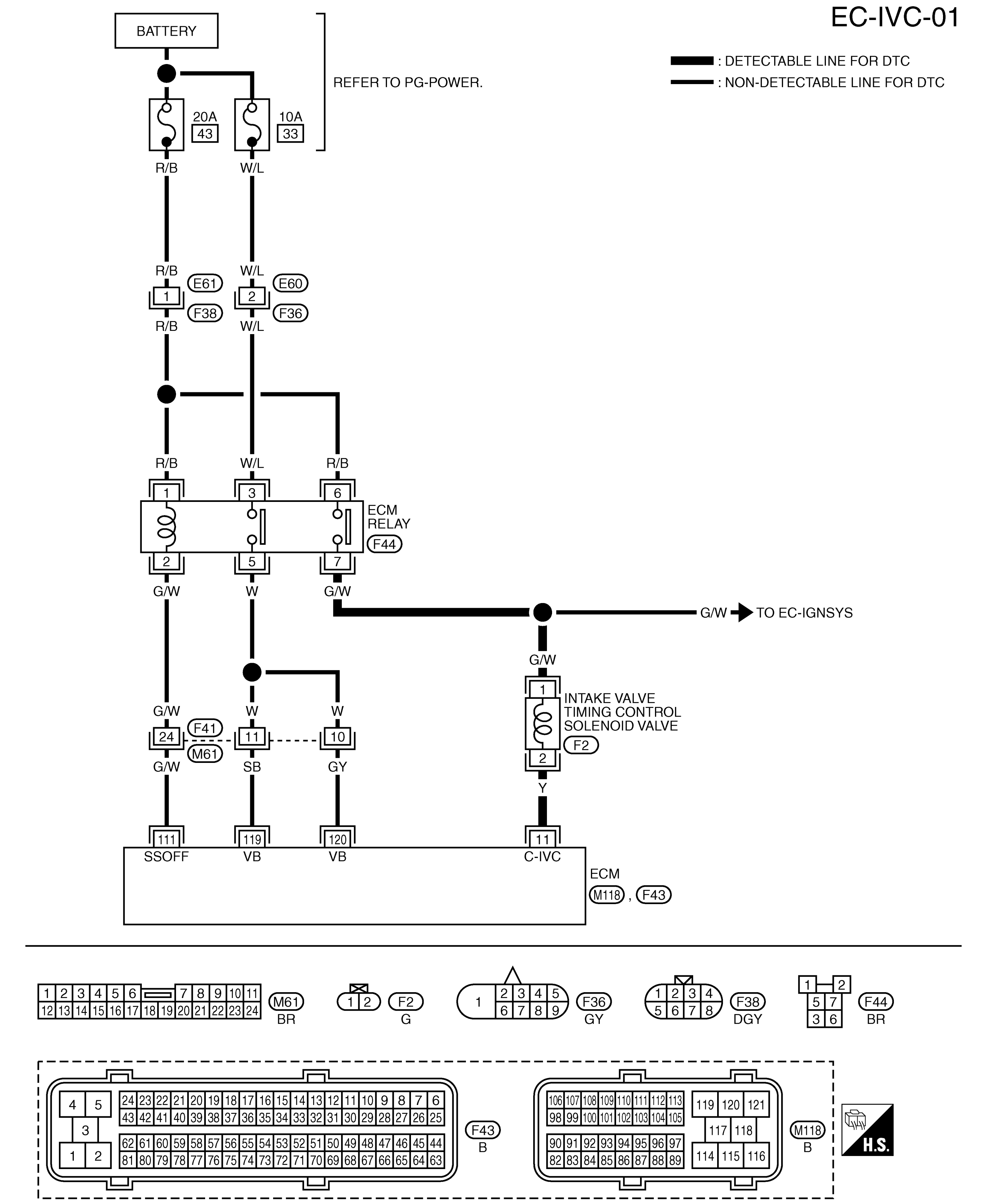

TBWB0127E

Specification data are reference values and are measured between each terminal and ground.
Pulse signal is measured by CONSULT-II.

CAUTION:

Do not use ECM ground terminals when measuring input/output voltage. Doing so may result in damage to the ECM's transistor. Use a ground other than ECM terminals, such as the ground.

TERMINAL NO.	WIRE COLOR	ITEM	CONDITION	DATA (DC Voltage)
11	Y	Intake valve timing control solenoid valve	**[Engine is running]** ● **Warm-up condition** ● Idle speed	BATTERY VOLTAGE (11 - 14V)
			[Engine is running] ● **Warm-up condition** ● Engine speed 2,500 rpm	7 - 10V★ 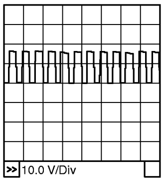 PBIB1790E

★: Average voltage for pulse signal (Actual pulse signal can be confirmed by oscilloscope.)

Diagnostic Procedure

ABS00D8J

1. CHECK POWER SUPPLY CIRCUIT

1. Turn ignition switch OFF.
2. Disconnect intake valve timing control solenoid valve harness connector.
3. Turn ignition switch ON.

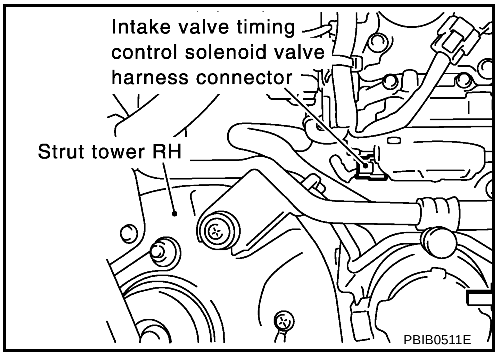

PBIB0511E

4. Check voltage between intake valve timing control solenoid valve terminal 1 and ground with CONSULT-II or tester.

Voltage: Battery voltage

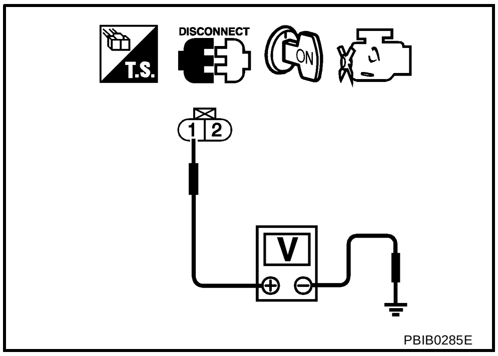

PBIB0285E

OK or NG

OK >> GO TO 2.

NG >> Repair open circuit or short to ground or short to power in harness or connectors.

2. CHECK INTAKE VALVE TIMING CONTROL SOLENOID VALVE OUTPUT SIGNAL CIRCUIT FOR OPEN AND SHORT

1. Turn ignition switch OFF.
2. Disconnect ECM harness connector.
3. Check harness continuity between intake valve timing control solenoid valve terminal 2 and ECM terminal 11. Refer to Wiring Diagram.

    Continuity should exist.

4. Also check harness for short to ground and short to power.

OK or NG

OK >> GO TO 3.
NG >> Repair open circuit or short to ground or short to power in harness or connectors.

3. CHECK INTAKE VALVE TIMING CONTROL SOLENOID VALVE

Refer to EC-426, "Component Inspection" .

OK or NG

OK >> GO TO 4.
NG >> Replace intake valve timing control solenoid valve.

4. CHECK INTERMITTENT INCIDENT

Refer to EC-153, "TROUBLE DIAGNOSIS FOR INTERMITTENT INCIDENT" .

>> **INSPECTION END**

Component Inspection

ABS00CT5

INTAKE VALVE TIMING CONTROL SOLENOID VALVE

1. Disconnect intake valve timing control solenoid valve harness connector.
2. Check resistance between intake valve timing control solenoid valve as follows.

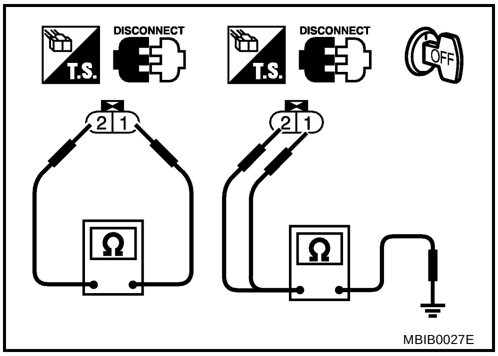

MBIB0027E

Terminal	Resistance
1 and 2	8Ω [at 20°C (68°F)]
1 or 2 and ground	∞ Ω (Continuity should not exist.)

If NG, replace intake valve timing control solenoid valve.
If OK, go to next step.

3. Remove intake valve timing control solenoid valve.
4. Provide 12V DC between intake valve timing control solenoid valve terminals and then interrupt it. Make sure that the plunger moves as shown in the figure.

    CAUTION:
    Do not apply 12V DC continuously for 5 seconds or more. Doing so may result in damage to the coil in intake valve timing control solenoid valve.
    If NG, replace intake valve timing control solenoid valve.

    NOTE:
    Always replace O-ring when intake valve timing control solenoid valve is removed.

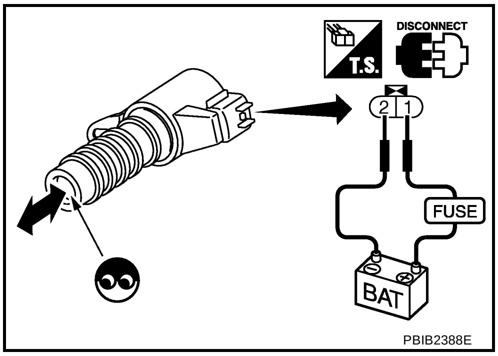

PBIB2388E

Removal and Installation

ABS00CT6

INTAKE VALVE TIMING CONTROL SOLENOID VALVE

Refer to EM-49, "TIMING CHAIN" .

DTC P1121 ELECTRIC THROTTLE CONTROL ACTUATOR

PFP:16119

Component Description

ABS00CT7

Electric throttle control actuator consists of throttle control motor, throttle position sensor, etc.
The throttle control motor is operated by the ECM and it opens and closes the throttle valve.
The throttle position sensor detects the throttle valve position, and the opening and closing speed of the throttle valve and feeds the voltage signals to the ECM. The ECM judges the current opening angle of the throttle valve from these signals and the ECM controls the throttle control motor to make the throttle valve opening angle properly in response to driving condition.

On Board Diagnosis Logic

ABS00CT8

This self-diagnosis has the one trip detection logic.

DTC No.	Trouble diagnosis name	DTC detecting condition		Possible cause
P1121 1121	Electric throttle control actuator	A)	Electric throttle control actuator does not function properly due to the return spring malfunction.	• Electric throttle control actuator
		B)	Throttle valve opening angle in fail-safe mode is not in specified range.	
		C)	ECM detects the throttle valve is stuck open.	

FAIL-SAFE MODE

When the malfunction is detected, ECM enters fail-safe mode and the MIL lights up.

Detected items	Engine operating condition in fail-safe mode
Malfunction A	ECM controls the electric throttle actuator by regulating the throttle opening around the idle position. The engine speed will not rise more than 2,000 rpm.
Malfunction B	ECM controls the electric throttle control actuator by regulating the throttle opening to 20 degrees or less.
Malfunction C	While the vehicle is driving, it slows down gradually by fuel cut. After the vehicle stops, the engine stalls. The engine can restart in N or P position, and engine speed will not exceed 1,000 rpm or more.

DTC Confirmation Procedure

ABS00CT9

NOTE:

- **Perform PROCEDURE FOR MALFUNCTION A AND B first. If the DTC cannot be confirmed, perform PROCEDURE FOR MALFUNCTION C.**
- If DTC Confirmation Procedure has been previously conducted, always turn ignition switch OFF and wait at least 10 seconds before conducting the next test.

PROCEDURE FOR MALFUNCTION A AND B

With CONSULT-II

1. Turn ignition switch ON and wait at least 1 second.
2. Select “DATA MONITOR” mode with CONSULT-II.
3. Set shift lever to D position (A/T) or 1st position (M/T), and wait at least 3 seconds.
4. Set shift lever to P position (A/T) or Neutral position (M/T).
5. Turn ignition switch OFF and wait at least 10 seconds.
6. Turn ignition switch ON and wait at least 1 second.
7. Set shift lever to D position (A/T) or 1st position (M/T), and wait at least 3 seconds.
8. Set shift lever to P position (A/T) or Neutral position (M/T).
9. Turn ignition switch OFF, wait at least 10 seconds, and then turn ON.
10. If DTC is detected, go to EC-428, "Diagnostic Procedure" .

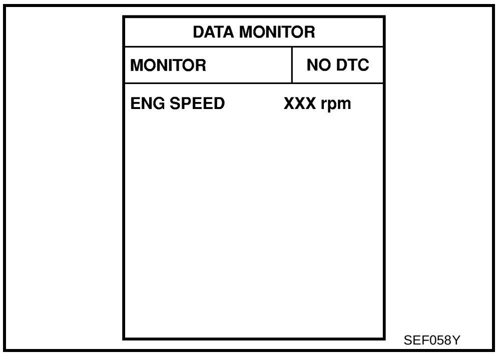

SEF058Y

With GST

Follow the procedure “With CONSULT-II” above.

PROCEDURE FOR MALFUNCTION C

With CONSULT-II

1. Turn ignition switch ON and wait at least 1 second.
2. Select “DATA MONITOR” mode with CONSULT-II.
3. Set shift lever to D position (A/T) or 1st position (M/T) and wait at least 3 seconds.
4. Set shift lever to N, P position (A/T) or Neutral (M/T) position.
5. Start engine and let it idle for 3 seconds.
6. If DTC is detected, go to EC-428, "Diagnostic Procedure" .

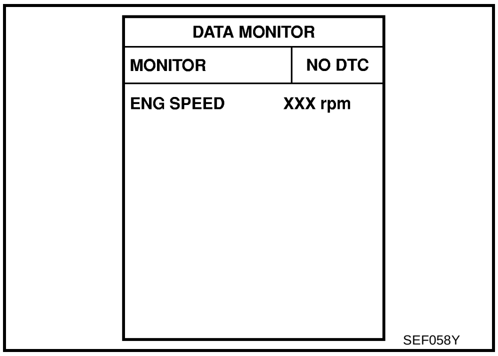

SEF058Y

With GST

Follow the procedure “With CONSULT-II” above.

Diagnostic Procedure

ABS00CTA

1. CHECK ELECTRIC THROTTLE CONTROL ACTUATOR VISUALLY

1. Remove the intake air duct.
2. Check if a foreign matter is caught between the throttle valve and the housing.

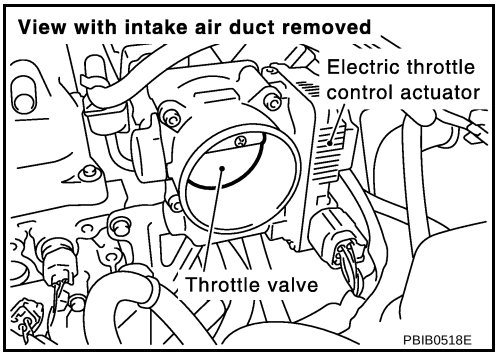

PBIB0518E

OK or NG

OK >> GO TO 2.
NG >> Remove the foreign matter and clean the electric throttle control actuator inside.

2. REPLACE ELECTRIC THROTTLE CONTROL ACTUATOR

1. Replace the electric throttle control actuator.
2. Perform EC-88, "Throttle Valve Closed Position Learning" .
3. Perform EC-88, "Idle Air Volume Learning" .

>> **INSPECTION END**

DTC P1122 ELECTRIC THROTTLE CONTROL FUNCTION

PFP:16119

Description

ABS00CTB

NOTE:
If DTC P1122 is displayed with DTC P1121 or 1126, first perform the trouble diagnosis for DTC P1121 or P1126. Refer to **EC-427 or EC-437 .**

Electric throttle control actuator consists of throttle control motor, throttle position sensor, etc.
The throttle control motor is operated by the ECM and it opens and closes the throttle valve.
The current opening angle of the throttle valve is detected by the throttle position sensor and it provides feedback to the ECM to control the throttle control motor to make the throttle valve opening angle properly in response to driving condition.

On Board Diagnosis Logic

ABS00CTC

This self-diagnosis has the one trip detection logic.

DTC No.	Trouble diagnosis name	DTC detecting condition	Possible cause
P1122 1122	Electric throttle control performance problem	Electric throttle control function does not operate properly.	● Harness or connectors (The throttle control motor circuit is open or shorted) ● Electric throttle control actuator

FAIL-SAFE MODE

When the malfunction is detected, the ECM enters fail-safe mode and the MIL lights up.

Engine operating condition in fail-safe mode
ECM stops the electric throttle control actuator control, throttle valve is maintained at a fixed opening (approx. 5 degrees) by the return spring.

DTC Confirmation Procedure

ABS00CTD

NOTE:
If DTC Confirmation Procedure has been previously conducted, always turn ignition switch OFF and wait at least 10 seconds before conducting the next test.
TESTING CONDITION:
Before performing the following procedure, confirm that battery voltage is more than 11V when engine is running.

WITH CONSULT-II

1. Turn ignition switch "ON" and wait at least 2 seconds.
2. Select "DATA MONITOR" mode with CONSULT-II.
3. Start engine and let it idle for 5 seconds.
4. If DTC is detected, go to EC-432, "Diagnostic Procedure" .

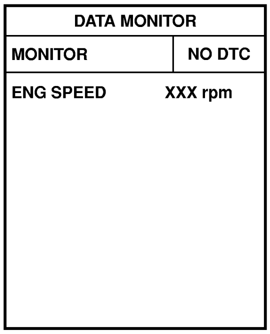

SEF058Y

WITH GST

Follow the procedure "WITH CONSULT-II" above.

Wiring Diagram

ABS00CTE

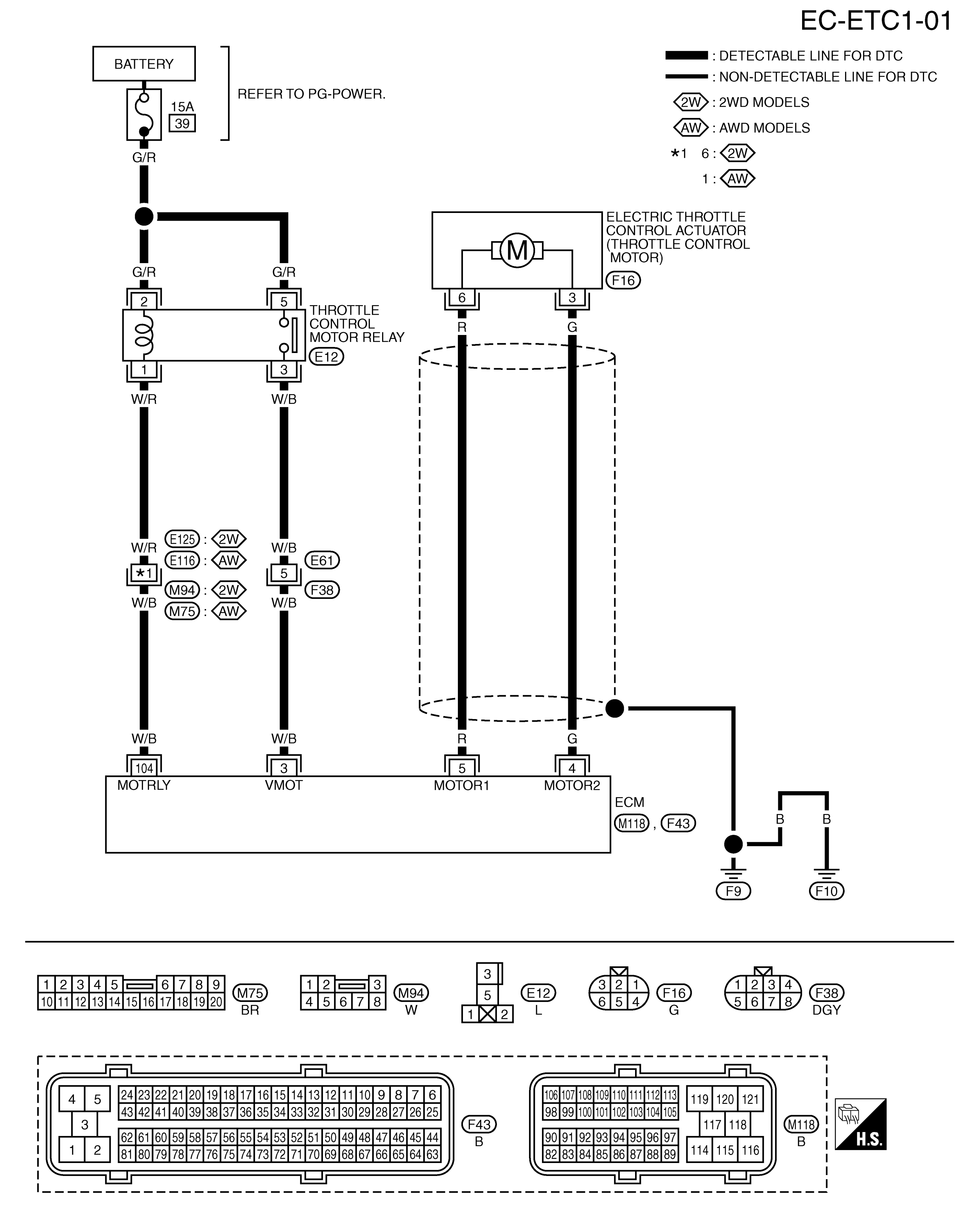

TBWB0151E

Specification data are reference values and are measured between each terminal and ground.
Pulse signal is measured by CONSULT-II.

CAUTION:

Do not use ECM ground terminals when measuring input/output voltage. Doing so may result in damage to the ECM's transistor. Use a ground other than ECM terminals, such as the ground.

TERMINAL NO.	WIRE COLOR	ITEM	CONDITION	DATA (DC Voltage)
3	W/B	Throttle control motor power supply	**[Ignition switch: ON]**	BATTERY VOLTAGE (11 - 14V)
4	G	Throttle control motor (Close)	**[Ignition switch: ON]** ● Engine stopped ● Shift lever: D (A/T), 1ST (M/T) ● Accelerator pedal: Fully released	0 - 14V★ 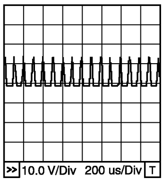 PBIB0534E
5	R	Throttle control motor (Open)	**[Ignition switch: ON]** ● Engine stopped ● Shift lever: D (A/T), 1ST (M/T) ● Accelerator pedal: Fully depressed	0 - 14V★ 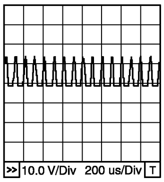 PBIB0533E
104	W/B	Throttle control motor relay	**[Ignition switch: OFF]**	BATTERY VOLTAGE (11 - 14V)
			[Ignition switch: ON]	0 - 1.0V

★: Average voltage for pulse signal (Actual pulse signal can be confirmed by oscilloscope.)

Diagnostic Procedure

ABS00D8K

1. CHECK GROUND CONNECTIONS

1. Turn ignition switch OFF.
2. Loosen and retighten three ground screws on the body.
   Refer to EC-161, "Ground Inspection" .

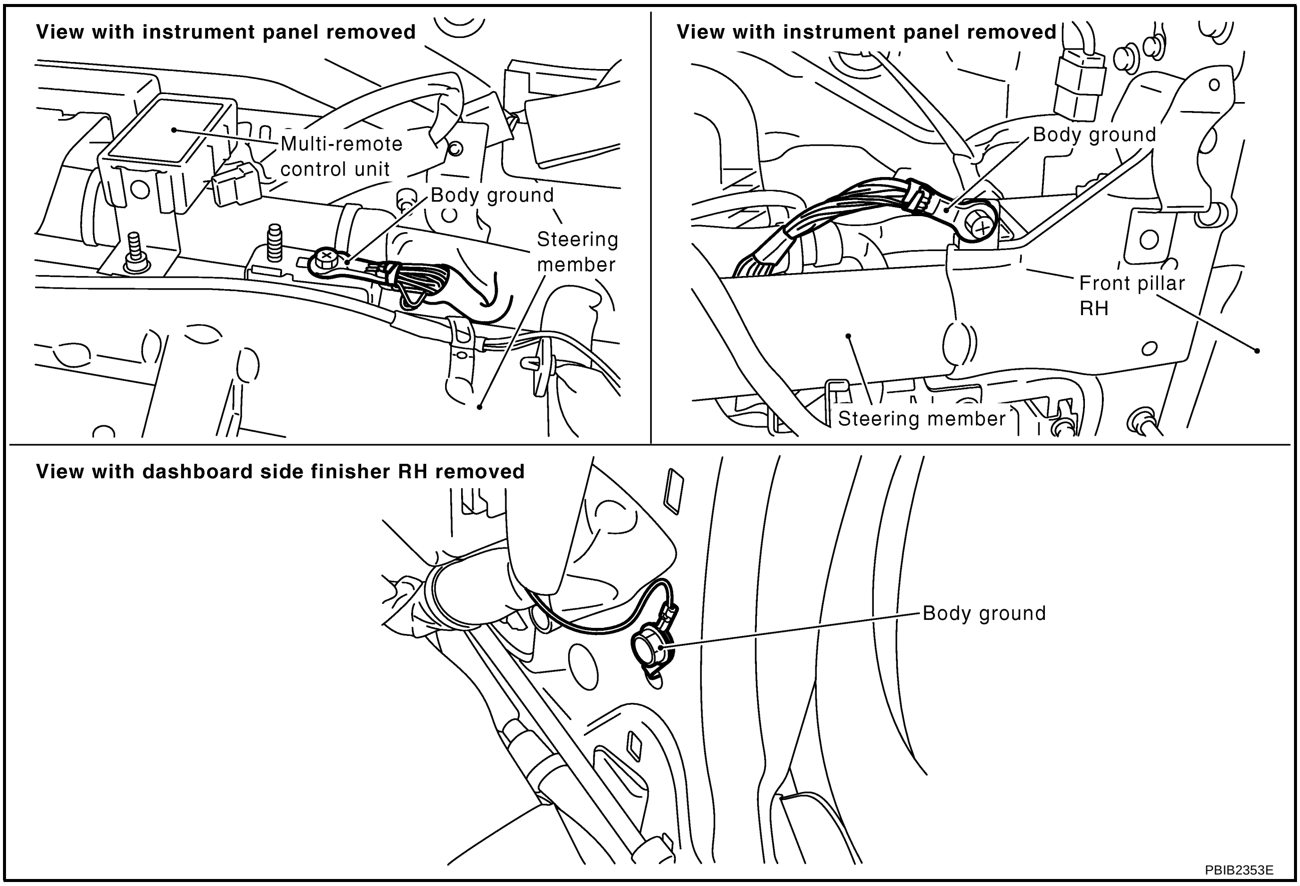

OK or NG

OK >> GO TO 2.
NG >> Repair or replace ground connections.

2. CHECK THROTTLE CONTROL MOTOR RELAY SIGNAL CIRCUIT

Check voltage between ECM terminal 3 and ground under the following conditions with CONSULT-II or tester.

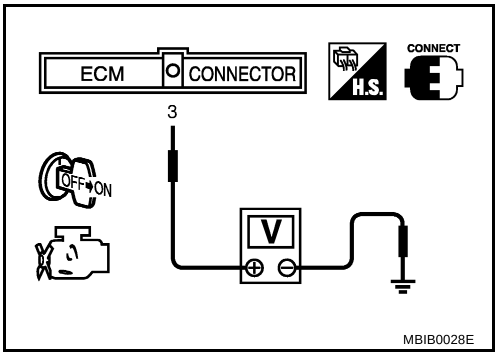

Ignition switch	Voltage
OFF	Approximately 0V
ON	Battery voltage (11 - 14V)

OK or NG

OK >> GO TO 10.
NG >> GO TO 3.

3. CHECK THROTTLE CONTROL MOTOR RELAY POWER SUPPLY CIRCUIT

1. Turn ignition switch OFF.
2. Disconnect throttle control motor relay.

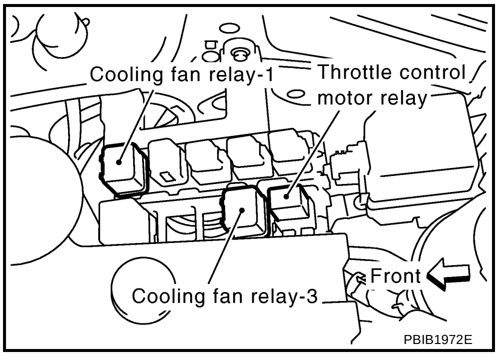

PBIB1972E

3. Check voltage between throttle control motor relay terminals 2, 5 and ground with CONSULT-II or tester.

Voltage: Battery voltage

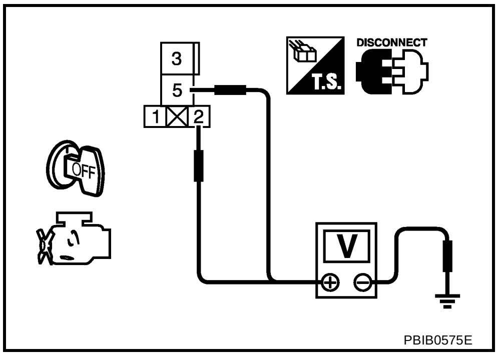

PBIB0575E

OK or NG

OK >> GO TO 5.
NG >> GO TO 4.

4. DETECT MALFUNCTIONING PART

Check the following.

- 15A fuse
- Harness for open or short between throttle control motor relay and battery

>> Repair or replace harness or connectors.

5. CHECK THROTTLE CONTROL MOTOR RELAY INPUT SIGNAL CIRCUIT

1. Disconnect ECM harness connector.
2. Check harness continuity between throttle control motor relay terminal 3 and ECM terminal 3. Refer to Wiring Diagram.

Continuity should exist.

3. Also check harness for short to ground and short to power.

OK or NG

OK >> GO TO 7.
NG >> GO TO 6.

6. DETECT MALFUNCTIONING PART

Check the following.

- Harness connectors E61, F38
- Harness for open or short between throttle control motor relay and ECM

>> Repair open circuit or short to ground or short to power in harness or connectors.

7. CHECK THROTTLE CONTROL MOTOR RELAY OUTPUT SIGNAL CIRCUIT

1. Check continuity between throttle control motor relay terminal 1 and ECM terminal 104.
   Refer to Wiring Diagram.

   Continuity should exist.

2. Also check harness for short to ground and short to power.

OK or NG

OK >> GO TO 9.
NG >> GO TO 8.

8. DETECT MALFUNCTIONING PART

Check the following.

- Harness connectors E125, M94 (2WD models)
- Harness connectors E116, M75 (AWD models)
- Harness for open or short between throttle control motor relay and ECM

>> Repair open circuit or short to ground or short to power in harness or connectors.

9. CHECK THROTTLE CONTROL MOTOR RELAY

Refer to EC-435, "Component Inspection" .

OK or NG

OK >> GO TO 13.
NG >> Replace throttle control motor relay.

10. CHECK THROTTLE CONTROL MOTOR OUTPUT SIGNAL CIRCUIT FOR OPEN OR SHORT

1. Turn ignition switch OFF.
2. Disconnect electric throttle control actuator harness connector.
3. Check harness continuity between the following terminals.
   Refer to Wiring Diagram.

Electric throttle control actuator terminal	ECM terminal	Continuity
3	4	Should exist
	5	Should not exist
6	4	Should not exist
	5	Should exist

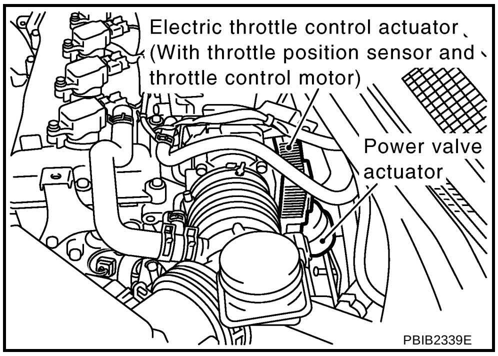

4. Also check harness for short to ground and short to power.

OK or NG

OK >> GO TO 11.
NG >> Repair open circuit or short to ground or short to power in harness or connectors.

11. CHECK ELECTRIC THROTTLE CONTROL ACTUATOR VISUALLY

1. Remove the intake air duct.
2. Check if foreign matter is caught between the throttle valve and the housing.

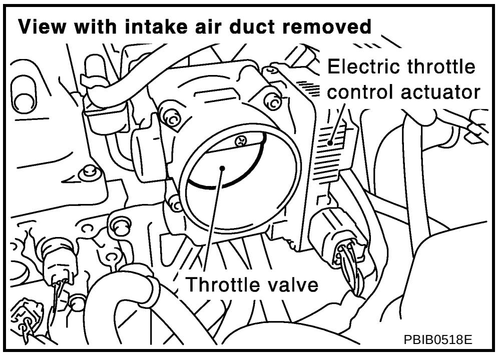

OK or NG

OK >> GO TO 12.
NG >> Remove the foreign matter and clean the electric throttle control actuator inside.

12. CHECK THROTTLE CONTROL MOTOR

Refer to EC-435, "Component Inspection" .

OK or NG

OK >> GO TO 13.
NG >> GO TO 14.

13. CHECK INTERMITTENT INCIDENT

Refer to EC-153, "TROUBLE DIAGNOSIS FOR INTERMITTENT INCIDENT" .

OK or NG

OK >> GO TO 14.
NG >> Repair or replace harness or connectors.

14. REPLACE ELECTRIC THROTTLE CONTROL ACTUATOR

1. Replace the electric throttle control actuator.
2. Perform EC-88, "Throttle Valve Closed Position Learning" .
3. Perform EC-88, "Idle Air Volume Learning" .

>> **INSPECTION END**

Component Inspection

ABS00CTG

THROTTLE CONTROL MOTOR RELAY

1. Apply 12V direct current between relay terminals 1 and 2.
2. Check continuity between relay terminals 3 and 5.

Conditions	Continuity
12V direct current supply between terminals 1 and 2	Yes
No current supply	No

3. If NG, replace throttle control motor relay.

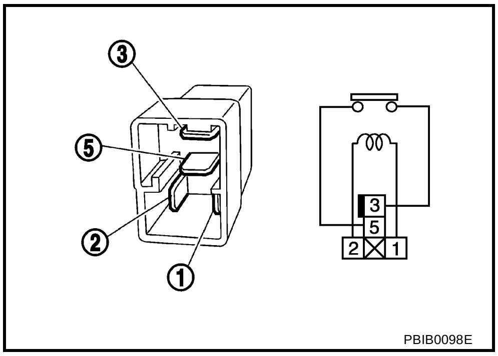

THROTTLE CONTROL MOTOR

1. Disconnect electric throttle control actuator harness connector.

2. Check resistance between terminals 3 and 6.

   Resistance: Approximately 1 - 15 Ω [at 25 °C (77°F)]

3. If NG, replace electric throttle control actuator and go to next step.
4. Perform EC-88, "Throttle Valve Closed Position Learning" .
5. Perform EC-88, "Idle Air Volume Learning" .

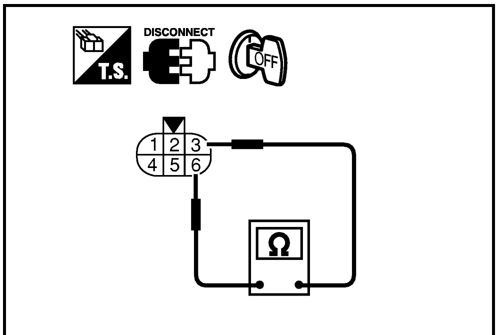

PBIB0095E

Remove and Installation

ABS00CTH

ELECTRIC THROTTLE CONTROL ACTUATOR

Refer to EM-16, "INTAKE MANIFOLD" .

DTC P1124, P1126 THROTTLE CONTROL MOTOR RELAY

PFP:16119

Component Description

ABS00CTI

Power supply for the throttle control motor is provided to the ECM via throttle control motor relay. The throttle control motor relay is ON/OFF controlled by the ECM. When the ignition switch is turned ON, the ECM sends an ON signal to throttle control motor relay and battery voltage is provided to the ECM. When the ignition switch is turned OFF, the ECM sends an OFF signal to throttle control motor relay and battery voltage is not provided to the ECM.

CONSULT-II Reference Value in Data Monitor Mode

ABS00CTJ

Specification data are reference values.

MONITOR ITEM	CONDITION	SPECIFICATION
THRTL RELAY	● Ignition switch: ON	ON

On Board Diagnosis Logic

ABS00CTK

These self-diagnoses have one trip detection logic.

DTC No.	Trouble diagnosis name	DTC detecting condition	Possible cause
P1124 1124	Throttle control motor relay circuit short	ECM detects the throttle control motor relay is stuck ON.	● Harness or connectors (The throttle control motor relay circuit is shorted) ● Throttle control motor relay
P1126 1126	Throttle control motor relay circuit open	ECM detects a voltage of power source for throttle control motor is excessively low.	● Harness or connectors (The throttle control motor relay circuit is open) ● Throttle control motor relay

FAIL-SAFE MODE

When the malfunction is detected, ECM enters fail-safe mode and the MIL lights up.

Engine operating condition in fail-safe mode
ECM stops the electric throttle control actuator control, throttle valve is maintained at a fixed opening (approx. 5 degrees) by the return spring.

DTC Confirmation Procedure

ABS00CTL

NOTE:

If DTC Confirmation Procedure has been previously conducted, always turn ignition switch OFF and wait at least 10 seconds before conducting the next test.

PROCEDURE FOR DTC P1124

TESTING CONDITION:

Before performing the following procedure, confirm that battery voltage is more than 8V.

With CONSULT-II

1. Turn ignition switch ON and wait at least 1 second.
2. Select “DATA MONITOR” mode with CONSULT-II.
3. If DTC is detected, go to EC-440, "Diagnostic Procedure" .

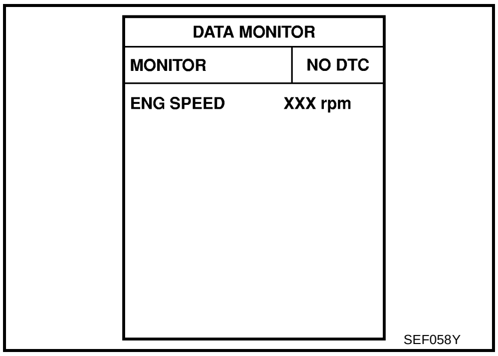

With GST

Follow the procedure “With CONSULT-II” above.

PROCEDURE FOR DTC P1126

With CONSULT-II

1. Turn ignition switch ON and wait at least 2 seconds.
2. Select “DATA MONITOR” mode with CONSULT-II.
3. Start engine and let it idle for 5 seconds.
4. If DTC is detected, go to EC-440, "Diagnostic Procedure" .

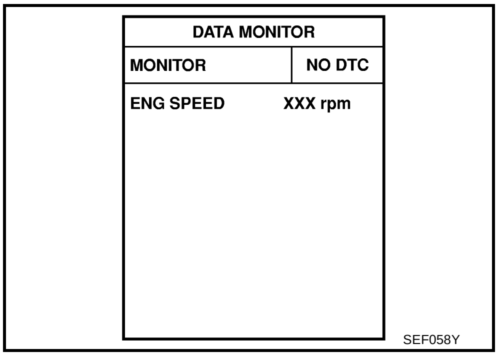

With GST

Follow the procedure “With CONSULT-II” above.

Wiring Diagram

ABS00CTM

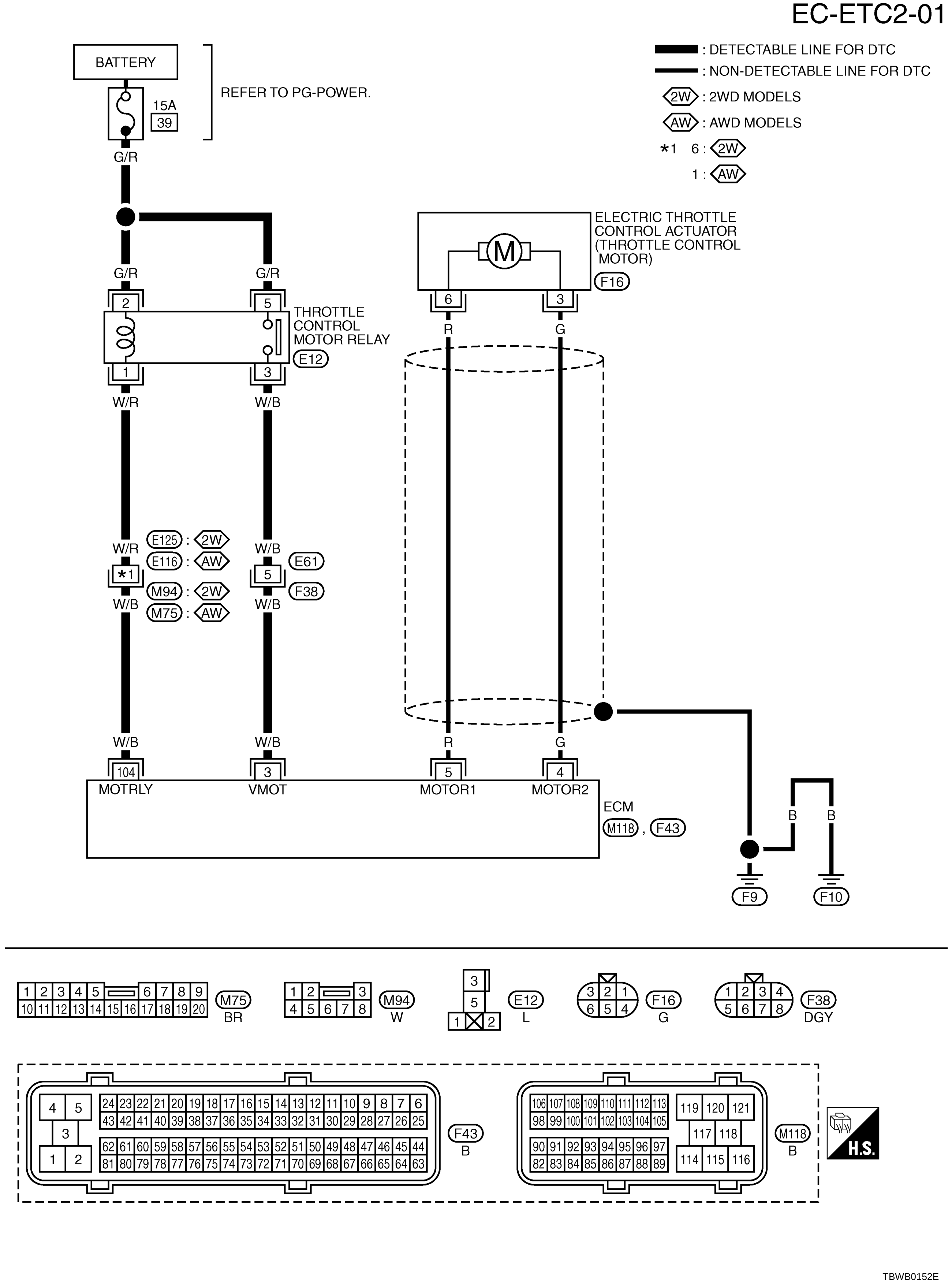

Specification data are reference values and are measured between each terminal and ground.

CAUTION:

Do not use ECM ground terminals when measuring input/output voltage. Doing so may result in damage to the ECM's transistor. Use a ground other than ECM terminals, such as the ground.

TERMINAL NO.	WIRE COLOR	ITEM	CONDITION	DATA (DC Voltage)
3	W/B	Throttle control motor power supply	**[Ignition switch: ON]**	BATTERY VOLTAGE (11 - 14V)
104	W/B	Throttle control motor relay	**[Ignition switch: OFF]**	BATTERY VOLTAGE (11 - 14V)
			[Ignition switch: ON]	0 - 1.0V

Diagnostic Procedure

ABS00D8L

1. CHECK THROTTLE CONTROL MOTOR RELAY POWER SUPPLY CIRCUIT

1. Turn ignition switch OFF.
2. Disconnect throttle control motor relay.

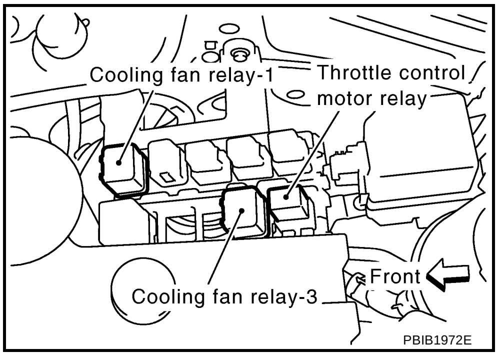

PBIB1972E

3. Check voltage between throttle control motor relay terminals 2, 5 and ground.

Voltage: Battery voltage

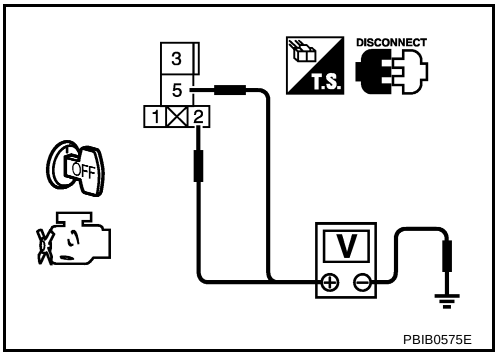

PBIB0575E

OK or NG

OK >> GO TO 3.

NG >> GO TO 2.

2. DETECT MALFUNCTIONING PART

Check the following.

- 15A fuse
- Harness for open or short between throttle control motor relay and battery

>> Repair or replace harness or connectors.

3. CHECK THROTTLE CONTROL MOTOR RELAY INPUT SIGNAL CIRCUIT

1. Disconnect ECM harness connector.
2. Check harness continuity between throttle control motor relay terminal 3 and ECM terminal 3.
   Refer to Wiring Diagram.

   Continuity should exist.

3. Also check harness for short to ground and short to power.

OK or NG

OK >> GO TO 5.
NG >> GO TO 4.

4. DETECT MALFUNCTIONING PART

Check the following.

- Harness connectors E61, F38
- Harness for open or short between throttle control motor relay and ECM

>> Repair open circuit or short to ground or short to power in harness or connectors.

5. CHECK THROTTLE CONTROL MOTOR RELAY OUTPUT SIGNAL CIRCUIT

1. Check continuity between throttle control motor relay terminal 1 and ECM terminal 104.
   Refer to Wiring Diagram.

   Continuity should exist.

2. Also check harness for short to ground and short to power.

OK or NG

OK >> GO TO 7.
NG >> GO TO 6.

6. DETECT MALFUNCTIONING PART

Check the following.

- Harness connectors E125, M94 (2WD models)
- Harness connectors E116, M75 (AWD models)
- Harness for open or short between throttle control motor relay and ECM

>> Repair open circuit or short to ground or short to power in harness or connectors.

7. CHECK THROTTLE CONTROL MOTOR RELAY

Refer to EC-442, "Component Inspection" .

OK or NG

OK >> GO TO 8.
NG >> Replace throttle control motor relay.

8. CHECK INTERMITTENT INCIDENT

Refer to EC-153, "TROUBLE DIAGNOSIS FOR INTERMITTENT INCIDENT" .

>> **INSPECTION END**

Component Inspection

ABS00D8M

THROTTLE CONTROL MOTOR RELAY

1. Apply 12V direct current between relay terminals 1 and 2.
2. Check continuity between relay terminals 3 and 5.

Conditions	Continuity
12V direct current supply between terminals 1 and 2	Yes
No current supply	No

3. If NG, replace throttle control motor relay.

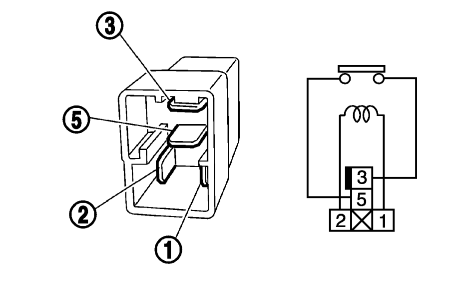

PBIB0098E

DTC P1128 THROTTLE CONTROL MOTOR

PFP:16119

Component Description

ABS00CTO

The throttle control motor is operated by the ECM and it opens and closes the throttle valve.
The current opening angle of the throttle valve is detected by the throttle position sensor and it provides feedback to the ECM to control the throttle control motor to make the throttle valve opening angle properly in response to driving condition.

On Board Diagnosis Logic

ABS00CTP

This self-diagnosis has the one trip detection logic.

DTC No.	Trouble diagnosis name	DTC detecting condition	Possible cause
P1128 1128	Throttle control motor circuit short	ECM detects short in both circuits between ECM and throttle control motor.	● Harness or connectors (The throttle control motor circuit is shorted.) ● Electric throttle control actuator (The throttle control motor)

FAIL-SAFE MODE

When the malfunction is detected, ECM enters fail-safe mode and the MIL lights up.

Engine operating condition in fail-safe mode
ECM stops the electric throttle control actuator control, throttle valve is maintained at a fixed opening (approx. 5 degrees) by the return spring.

DTC Confirmation Procedure

ABS00CTQ

NOTE:
If DTC Confirmation Procedure has been previously conducted, always turn ignition switch OFF and wait at least 10 seconds before conducting the next test.

WITH CONSULT-II

1. Turn ignition switch ON and wait at least 2 seconds.
2. Select “DATA MONITOR” mode with CONSULT-II.
3. Start engine and let it idle for 5 seconds.
4. If DTC is detected, go to EC-446, "Diagnostic Procedure" .

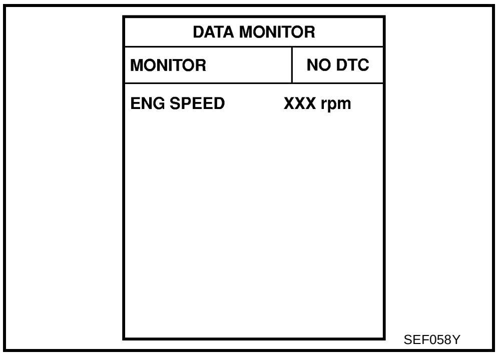

SEF058Y

WITH GST

Follow the procedure “WITH CONSULT-II” above.

Wiring Diagram

ABS00CTR

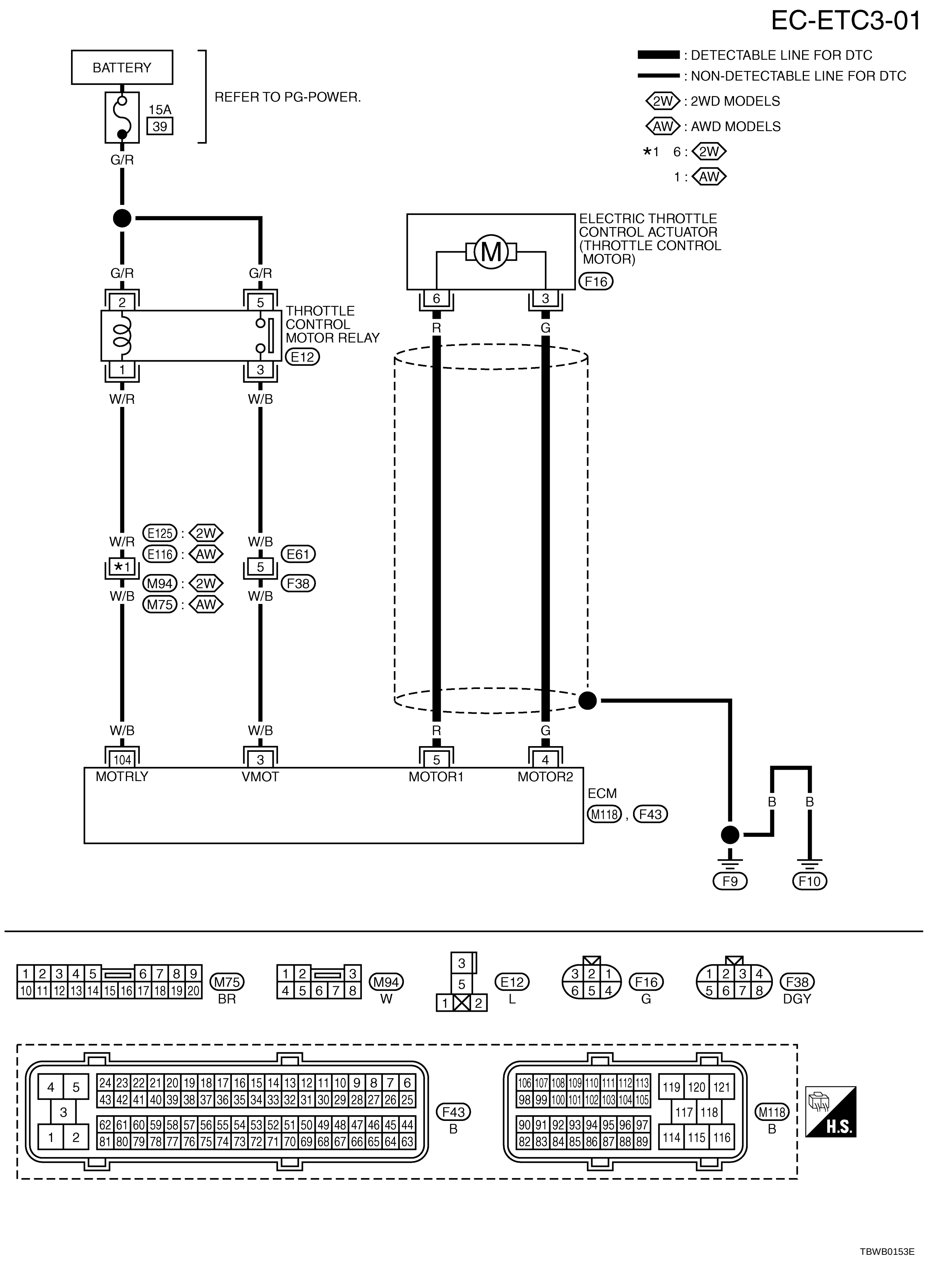

DTC P1128 THROTTLE CONTROL MOTOR

Specification data are reference values and are measured between each terminal and ground.
Pulse signal is measured by CONSULT-II.

CAUTION:

Do not use ECM ground terminals when measuring input/output voltage. Doing so may result in damage to the ECM's transistor. Use a ground other than ECM terminals, such as the ground.

TERMINAL NO.	WIRE COLOR	ITEM	CONDITION	DATA (DC Voltage)
4	G	Throttle control motor (Close)	**[Ignition switch: ON]** ● Engine stopped ● Shift lever: D (A/T), 1ST (M/T) ● Accelerator pedal: Fully released	0 - 14V★ 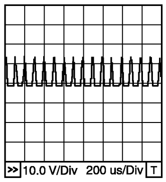 PBIB0534E
5	R	Throttle control motor (Open)	**[Ignition switch: ON]** ● Engine stopped ● Shift lever: D (A/T), 1ST (M/T) ● Accelerator pedal: Fully depressed	0 - 14V★ 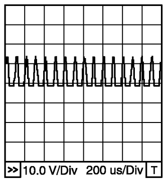 PBIB0533E

★: Average voltage for pulse signal (Actual pulse signal can be confirmed by oscilloscope.)

Diagnostic Procedure

ABS00D8N

1. CHECK GROUND CONNECTIONS

1. Turn ignition switch OFF.
2. Loosen and retighten three ground screws on the body.
   Refer to EC-161, "Ground Inspection" .

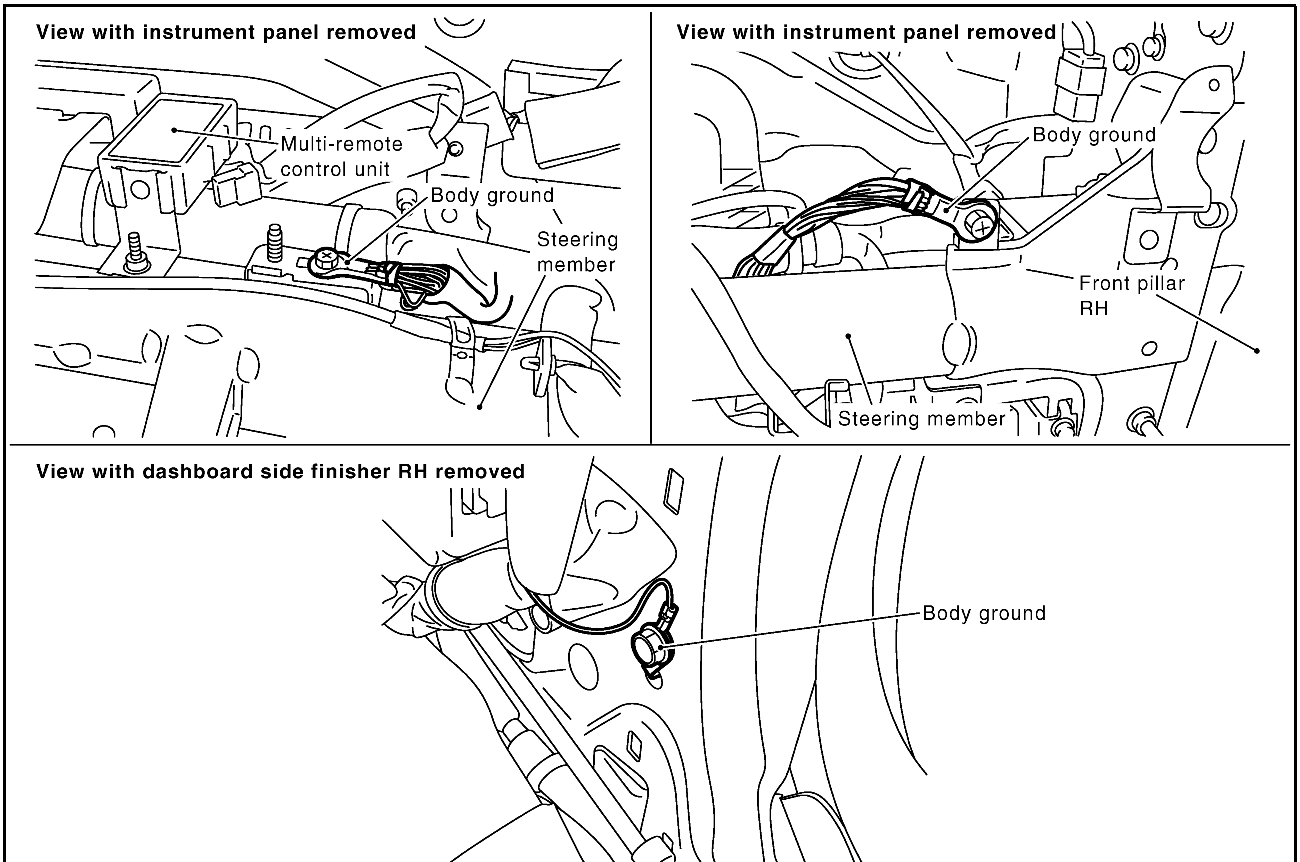

PBIB2353E

OK or NG

OK >> GO TO 2.
NG >> Repair or replace ground connections.

2. CHECK THROTTLE CONTROL MOTOR OUTPUT SIGNAL CIRCUIT FOR OPEN OR SHORT

1. Disconnect electric throttle control actuator harness connector.
2. Disconnect ECM harness connector.
3. Check harness continuity between the following terminals.
   Refer to Wiring Diagram.

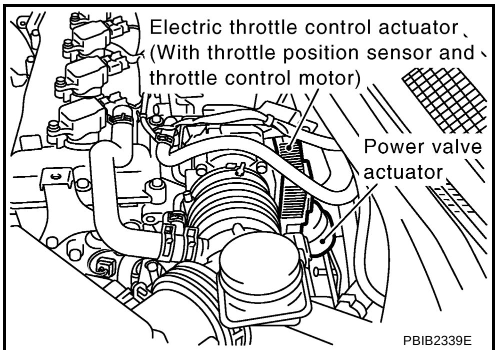

PBIB2339E

Electric throttle control actuator terminal	ECM terminal	Continuity
3	4	Should exist
	5	Should not exist
6	4	Should not exist
	5	Should exist

4. Also check harness for short to ground and short to power.

OK or NG

OK >> GO TO 3.
NG >> Repair open circuit or short to ground or short to power in harness or connectors.

3. CHECK THROTTLE CONTROL MOTOR

Refer to EC-447, "Component Inspection" .

OK or NG

OK >> GO TO 4.
NG >> GO TO 5.

4. CHECK INTERMITTENT INCIDENT

Refer to EC-153, "TROUBLE DIAGNOSIS FOR INTERMITTENT INCIDENT" .

OK or NG

OK >> GO TO 5.
NG >> Repair or replace harness or connectors.

5. REPLACE ELECTRIC THROTTLE CONTROL ACTUATOR

1. Replace the electric throttle control actuator.
2. Perform EC-88, "Throttle Valve Closed Position Learning" .
3. Perform EC-88, "Idle Air Volume Learning" .

>> **INSPECTION END**

Component Inspection

ABS00CTT

THROTTLE CONTROL MOTOR

1. Disconnect electric throttle control actuator harness connector.
2. Check resistance between terminals 3 and 6.

Resistance: Approximately 1 - 15 Ω [at 25 °C (77°F)]

3. If NG, replace electric throttle control actuator and go to next step.
4. Perform EC-88, "Throttle Valve Closed Position Learning" .
5. Perform EC-88, "Idle Air Volume Learning" .

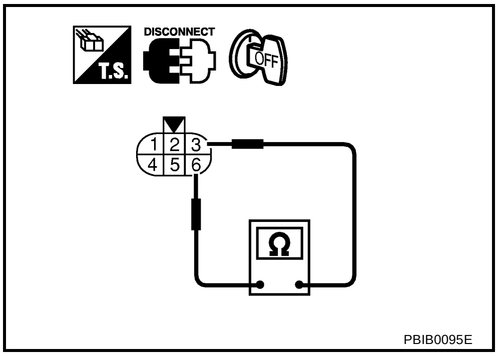

PBIB0095E

Removal and Installation

ABS00CTU

ELECTRIC THROTTLE CONTROL ACTUATOR

Refer to EM-16, "INTAKE MANIFOLD" .

DTC P1143 HO2S1

PFP:22690

Component Description

ABS00D7E

The heated oxygen sensor 1 is placed into the exhaust manifold. It detects the amount of oxygen in the exhaust gas compared to the outside air. The heated oxygen sensor 1 has a closed-end tube made of ceramic zirconia. The zirconia generates voltage from approximately 1V in richer conditions to 0V in leaner conditions. The heated oxygen sensor 1 signal is sent to the ECM. The ECM adjusts the injection pulse duration to achieve the ideal air-fuel ratio. The ideal air-fuel ratio occurs near the radical change from 1V to 0V.

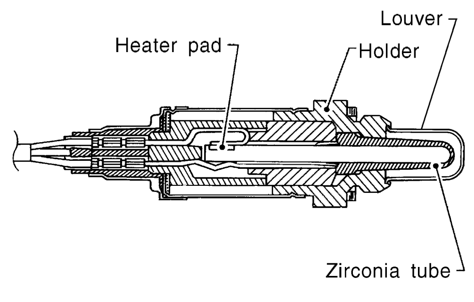

SEF463R

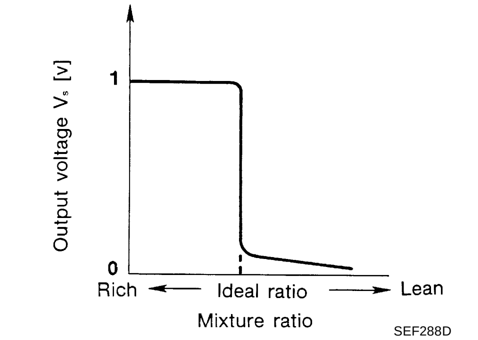

SEF288D

CONSULT-II Reference Value in Data Monitor Mode

ABS00D7F

Specification data are reference values.

MONITOR ITEM	CONDITION		SPECIFICATION
HO2S1 (B1)	● Engine: After warming up	Maintaining engine speed at 2,000 rpm	0 - 0.3V ←→ 0.6 - 1.0V
HO2S1 MNTR (B1)	● Engine: After warming up	Maintaining engine speed at 2,000 rpm	LEAN ←→ RICH Changes more than 5 times during 10 seconds.

On Board Diagnosis Logic

ABS00D7G

To judge the malfunction, the output from the heated oxygen sensor 1 is monitored to determine whether the rich output is sufficiently high and whether the lean output is sufficiently low. When both the outputs are shifting to the lean side, the malfunction will be detected.

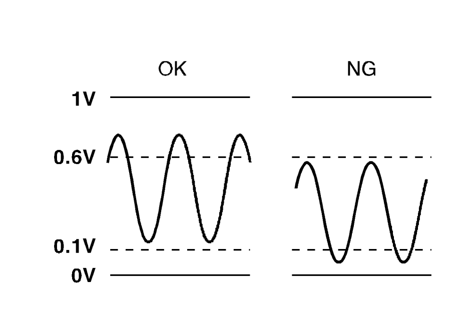

SEF300U

DTC No.	Trouble diagnosis name	DTC detecting condition	Possible cause
P1143 1143	Heated oxygen sensor 1 lean shift monitoring	The maximum and minimum voltage from the sensor are not reached to the specified voltages.	● Heated oxygen sensor 1 ● Heated oxygen sensor 1 heater ● Fuel pressure ● Fuel injector ● Intake air leaks

DTC Confirmation Procedure

ABS00D7H

CAUTION:

Always drive vehicle at a safe speed.

NOTE:

If DTC Confirmation Procedure has been previously conducted, always turn ignition switch OFF and wait at least 10 seconds before conducting the next test.

TESTING CONDITION:

- **Always perform at a temperature above –10°C (14°F).**
- **Before performing following procedure, confirm that battery voltage is more than 11V at idle.**

WITH CONSULT-II

1. Start engine and warm it up to normal operating temperature.
2. Stop engine and wait at least 10 seconds.
3. Turn ignition switch ON and select “HO2S1 (B1) P1143” of “HO2S1” in “DTC WORK SUPPORT” mode with CONSULT-II.
4. Touch “START”.
5. Start engine and let it idle for at least 3 minutes.

   NOTE:

   Never raise engine speed above 3,600 rpm after this step. If the engine speed limit is exceeded, return to step 5.

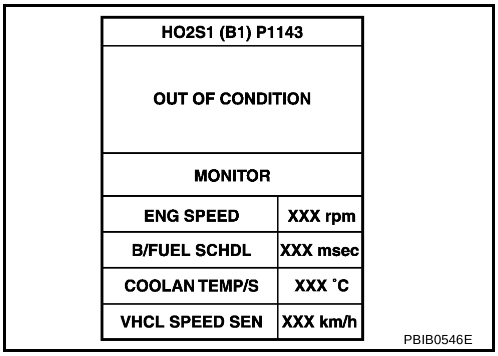

6. When the following conditions are met, “TESTING” will be displayed on the CONSULT-II screen. Maintain the conditions continuously until “TESTING” changes to “COMPLETED”. (It will take approximately 50 seconds or more.)

ENG SPEED	1,200 - 3,100 rpm
VHCL SPEED SE	Less than 100 km/h (62 MPH)
B/FUEL SCHDL	1.8 - 12.5 msec
Shift lever	Suitable position

   If “TESTING” is not displayed after 5 minutes, retry from step 2.

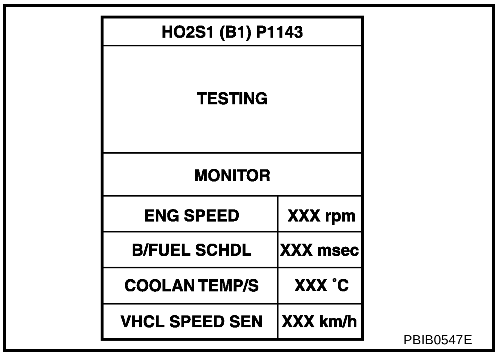

7. Make sure that “OK” is displayed after touching “SELF-DIAG RESULTS”. If “NG” is displayed, refer to EC-450, "Diagnostic Procedure" .

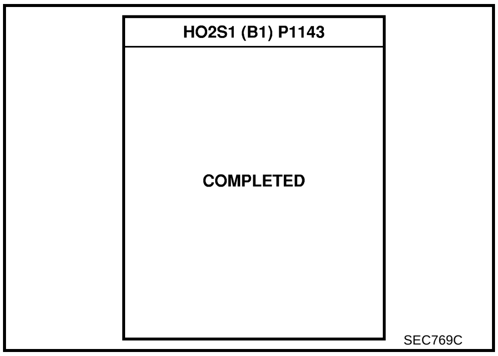

Overall Function Check

ABS00D7I

Use this procedure to check the overall function of the heated oxygen sensor 1 circuit. During this check, a 1st trip DTC might not be confirmed.

WITH GST

1. Start engine and warm it up to normal operating temperature.

2. Set voltmeter probes between ECM terminal 35 [HO2S1(B1) signal] and ground.
3. Check one of the following with engine speed held at 2,000 rpm constant under no load.
   - The maximum voltage is over 0.6V at least 1 time.
   - The minimum voltage is over 0.1V at least 1 time.
4. If NG, go to EC-450, "Diagnostic Procedure" .

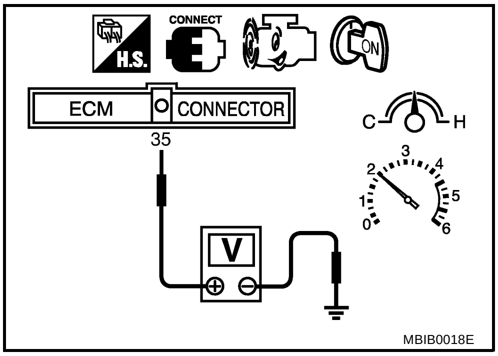

MBIB0018E

Diagnostic Procedure

ABS00D7J

1. CHECK GROUND CONNECTIONS

1. Turn ignition switch OFF.
2. Loosen and retighten three ground screws on the body.
   Refer to EC-161, "Ground Inspection" .

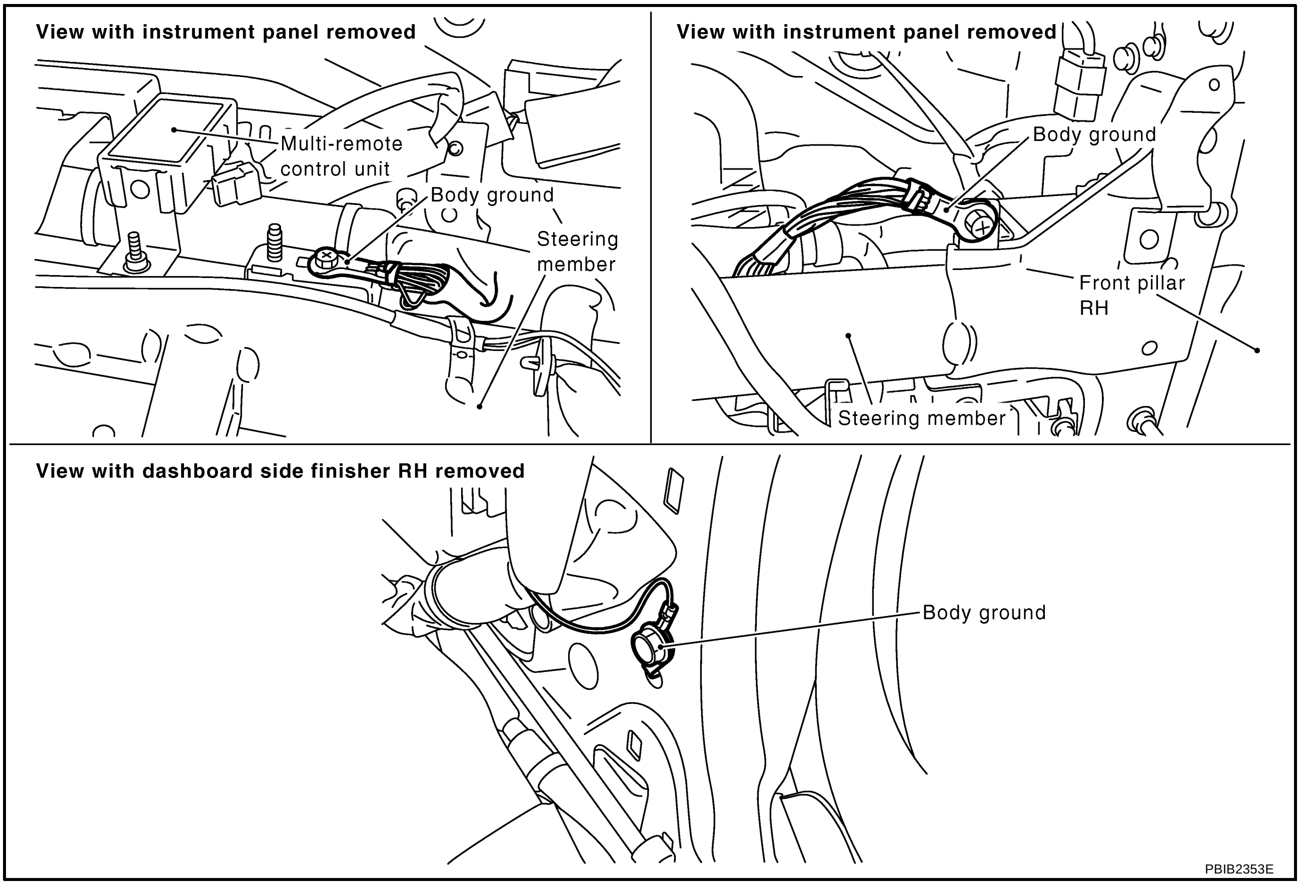

PBIB2353E

OK or NG

OK >> GO TO 2.
NG >> Repair or replace ground connections.

2. RETIGHTEN HEATED OXYGEN SENSOR 1

Loosen and retighten heated oxygen sensor 1.

Tightening torque: 50 N·m (5.1 kg-m, 37 ft-lb)

>> GO TO 3.

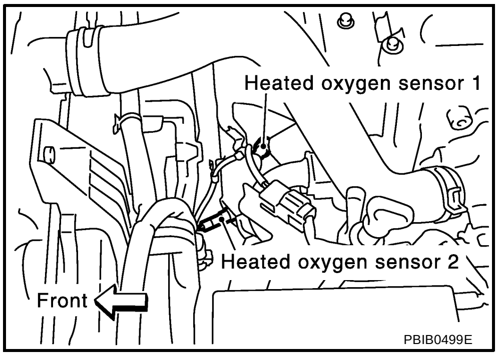

3. CLEAR THE SELF-LEARNING DATA

With CONSULT-II

1. Start engine and warm it up to normal operating temperature.
2. Select “SELF-LEARNING CONT” in “WORK SUPPORT” mode with CONSULT-II.
3. Clear the self-learning control coefficient by touching “CLEAR”.
4. Run engine for at least 10 minutes at idle speed.
   Is the 1st trip DTC P0171 detected?
   Is it difficult to start engine?

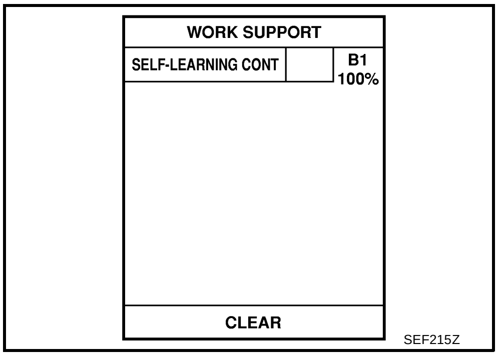

Without CONSULT-II

1. Start engine and warm it up to normal operating temperature.
2. Turn ignition switch OFF.
3. Disconnect mass air flow sensor harness connector, and restart and run engine for at least 5 seconds at idle speed.
4. Stop engine and reconnect mass air flow sensor harness connector.
5. Make sure DTC P0102 is displayed.
6. Erase the DTC memory. Refer to EC-59, "HOW TO ERASE EMISSION-RELATED DIAGNOSTIC INFORMATION" .
7. Make sure DTC P0000 is displayed.
8. Run engine for at least 10 minutes at idle speed.
   Is the 1st trip DTC P0171 detected?
   Is it difficult to start engine?

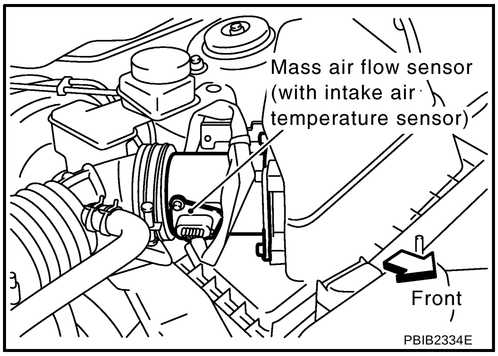

Yes or No

Yes >> Perform trouble diagnosis for DTC P0171. Refer to EC-266 .
No >> GO TO 4.

4. CHECK HEATED OXYGEN SENSOR 1 HEATER

Refer to EC-174, "Component Inspection" .

OK or NG

OK >> GO TO 5.
NG >> Replace heated oxygen sensor 1.

5. CHECK HEATED OXYGEN SENSOR 1

Refer to EC-174, "Component Inspection" .

OK or NG

OK >> GO TO 6.
NG >> Replace heated oxygen sensor 1.

6. CHECK INTERMITTENT INCIDENT

Refer to EC-153, "TROUBLE DIAGNOSIS FOR INTERMITTENT INCIDENT" .

>> **INSPECTION END**

Component Inspection

ABS00D7K

HEATED OXYGEN SENSOR 1

With CONSULT-II

1. Start engine and warm it up to normal operating temperature.
2. Select “MANU TRIG” and adjust “TRIGGER POINT” to 100% in “DATA MONITOR” mode with CONSULT-II.
3. Select “HO2S1 (B1)” and “HO2S1 MNTR (B1)”.
4. Hold engine speed at 2,000 rpm under no load during the following steps.
5. Touch “RECORD” on CONSULT-II screen.

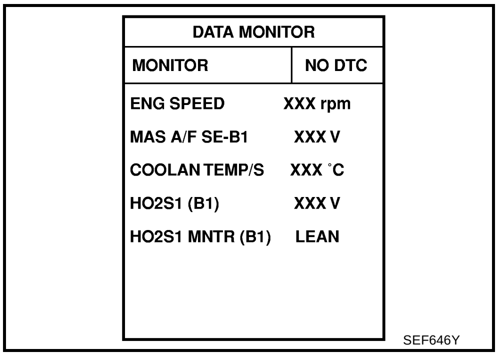

SEF646Y

6. Check the following.
   - “HO2S1 MNTR (B1)” in “DATA MONITOR” mode changes from “RICH” to “LEAN” to “RICH”more than 5 times in 10 seconds.
     5 times (cycles) are counted as shown at right.
   - “HO2S1 (B1)” voltage goes above 0.6V at least once.
   - “HO2S1 (B1)” voltage goes below 0.3V at least once.
   - “HO2S1 (B1)” voltage never exceeds 1.0V.

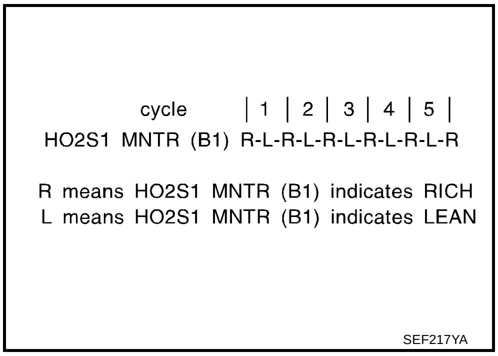

SEF217YA

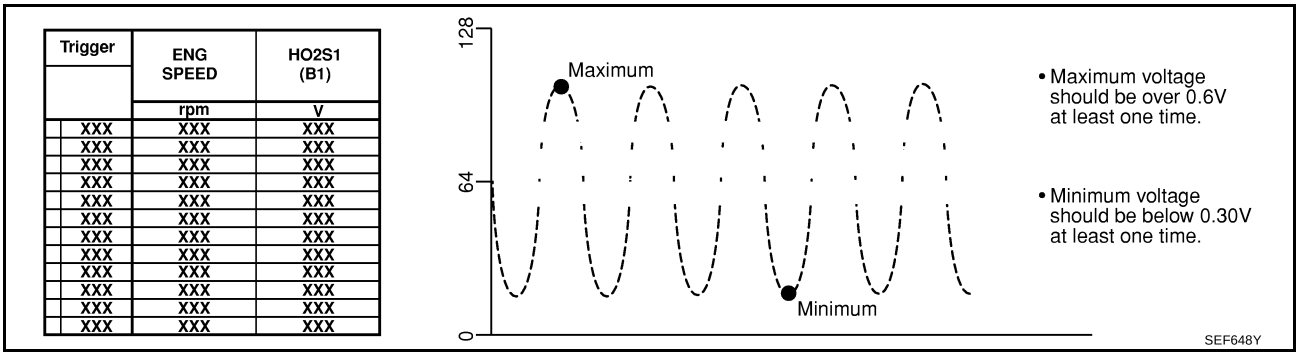

SEF648Y

CAUTION:

- **Discard any heated oxygen sensor which has been dropped from a height of more than 0.5 m (19.7 in) onto a hard surface such as a concrete floor; use a new one.**

- **Before installing new oxygen sensor, clean exhaust system threads using Oxygen Sensor Thread Cleaner tool J-43897-18 or J-43897-12 and approved anti-seize lubricant.**

Without CONSULT-II

1. Start engine and warm it up to normal operating temperature.
2. Set voltmeter probes between ECM terminal 35 [HO2S1 (B1) signal] and ground.
3. Check the following with engine speed held at 2,000 rpm constant under no load.
   - The voltage fluctuates between 0 to 0.3V and 0.6 to 1.0V more than 5 times within 10 seconds.
   - The maximum voltage is over 0.6V at least 1 time.
   - The minimum voltage is below 0.3V at least 1 time.
   - The voltage never exceeds 1.0V.

   1 time: 0 - 0.3V → 0.6 - 1.0V → 0 - 0.3V
   2 times: 0 - 0.3V → 0.6 - 1.0V → 0 - 0.3V → 0.6 - 1.0V → 0 - 0.3V

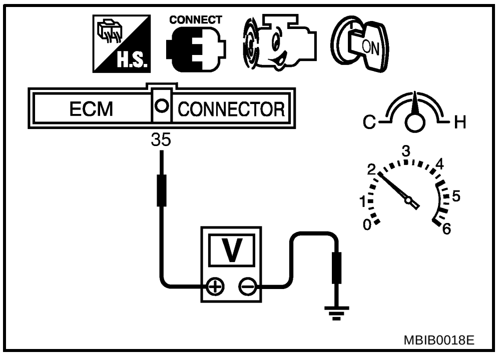

CAUTION:

- **Discard any heated oxygen sensor which has been dropped from a height of more than 0.5 m (19.7 in) onto a hard surface such as a concrete floor; use a new one.**
- **Before installing new oxygen sensor, clean exhaust system threads using Oxygen Sensor Thread Cleaner tool J-43897-18 or J-43897-12 and approved anti-seize lubricant.**

Removal and Installation

ABS00D7L

HEATED OXYGEN SENSOR 1

Refer to EM-20, "EXHAUST MANIFOLD AND THREE WAY CATALYST" .

DTC P1144 HO2S1

PFP:22690

Component Description

ABS00D7M

The heated oxygen sensor 1 is placed into the exhaust manifold. It detects the amount of oxygen in the exhaust gas compared to the outside air. The heated oxygen sensor 1 has a closed-end tube made of ceramic zirconia. The zirconia generates voltage from approximately 1V in richer conditions to 0V in leaner conditions. The heated oxygen sensor 1 signal is sent to the ECM. The ECM adjusts the injection pulse duration to achieve the ideal air-fuel ratio. The ideal air-fuel ratio occurs near the radical change from 1V to 0V.

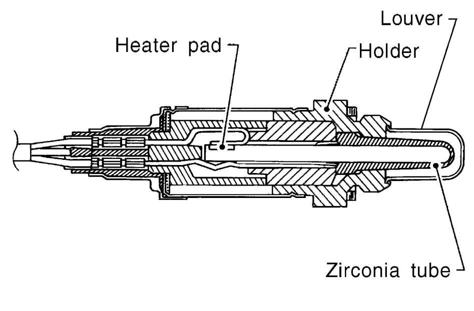

SEF463R

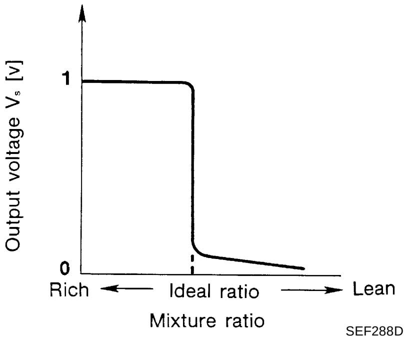

SEF288D

CONSULT-II Reference Value in Data Monitor Mode

ABS00D7N

Specification data are reference values.

MONITOR ITEM	CONDITION		SPECIFICATION
HO2S1 (B1)	● Engine: After warming up	Maintaining engine speed at 2,000 rpm	0 - 0.3V ←→ 0.6 - 1.0V
HO2S1 MNTR (B1)	● Engine: After warming up	Maintaining engine speed at 2,000 rpm	LEAN ←→ RICH Changes more than 5 times during 10 seconds.

On Board Diagnosis Logic

ABS00D7O

To judge the malfunction, the output from the heated oxygen sensor 1 is monitored to determine whether the rich output is sufficiently high and lean output is sufficiently low. When both the outputs are shifting to the rich side, the malfunction will be detected.

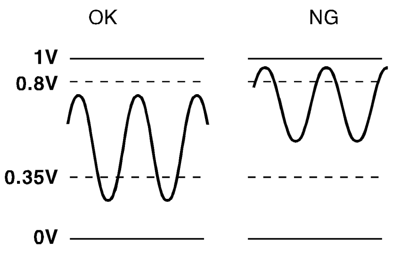

SEF299U

DTC No.	Trouble diagnosis name	DTC detecting condition	Possible cause
P1144 1144	Heated oxygen sensor 1 rich shift monitoring	The maximum and minimum voltages from the sensor are beyond the specified voltages.	● Heated oxygen sensor 1 ● Heated oxygen sensor 1 heater ● Fuel pressure ● Fuel injector

DTC Confirmation Procedure

ABS00D7P

CAUTION:
Always drive vehicle at a safe speed.

NOTE:
If DTC Confirmation Procedure has been previously conducted, always turn ignition switch OFF and wait at least 10 seconds before conducting the next test.

TESTING CONDITION:

- **Always perform at a temperature above –10°C (14°F).**
- **Before performing the following procedure, confirm that battery voltage is more than 11V at idle.**

WITH CONSULT-II

1. Start engine and warm it up to normal operating temperature.
2. Stop engine and wait at least 5 seconds.
3. Turn ignition switch ON and select “HO2S1 (B1) P1144” of “HO2S1” in “DTC WORK SUPPORT” mode with CONSULT-II.
4. Touch “START”.
5. Start engine and let it idle for at least 3 minutes.
   NOTE:
   Never raise engine speed above 3,600 rpm after this step. If the engine speed limit is exceeded, return to step 5.

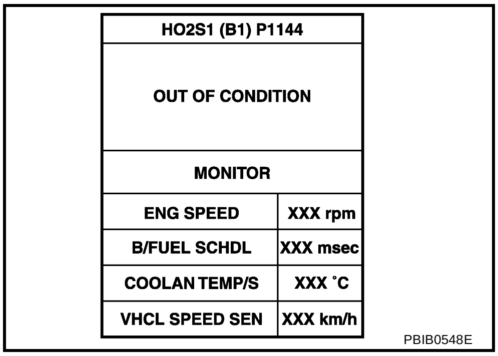

PBIB0548E

6. When the following conditions are met, “TESTING” will be displayed on the CONSULT-II screen. Maintain the conditions continuously until “TESTING” changes to “COMPLETED”. (It will take approximately 50 seconds or more.)

ENG SPEED	1,600 - 2,800 rpm (A/T) 1,500 - 2,800 rpm (M/T)
VHCL SPEED SE	Less than 101 km/h (63 MPH)
B/FUEL SCHDL	3.0 - 12.0 msec
Shift lever	Suitable position

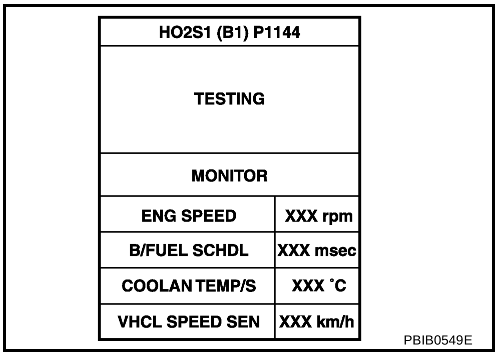

PBIB0549E

   If “TESTING” is not displayed after 5 minutes, retry from step 2.

7. Make sure that “OK” is displayed after touching “SELF-DIAG RESULTS”. If “NG” is displayed, refer to EC-456, "Diagnostic Procedure" .

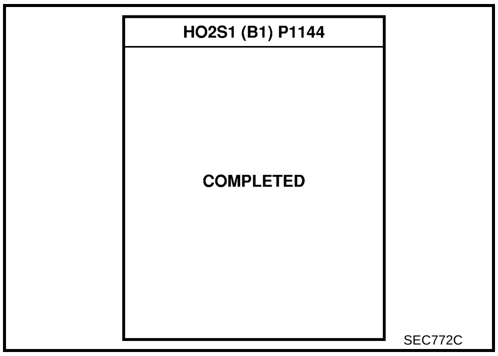

SEC772C

Overall Function Check

ABS00D7Q

Use this procedure to check the overall function of the heated oxygen sensor 1 circuit. During this check, a 1st trip DTC might not be confirmed.

WITH GST

1. Start engine and warm it up to normal operating temperature.
2. Set voltmeter probes between ECM terminal 35 [HO2S1(B1) signal] and ground.
3. Check one of the following with engine speed held at 2,000 rpm constant under no load.
   - The maximum voltage is below 0.8V at least 1 time.
   - The minimum voltage is below 0.35V at least 1 time.
4. If NG, go to EC-456, "Diagnostic Procedure" .

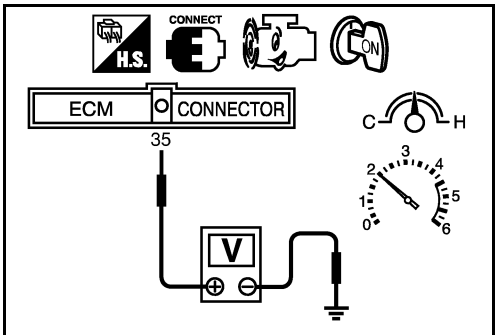

MBIB0018E

Diagnostic Procedure

ABS00D7R

1. CHECK GROUND CONNECTIONS

1. Turn ignition switch OFF.
2. Loosen and retighten three ground screws on the body.
   Refer to EC-161, "Ground Inspection" .

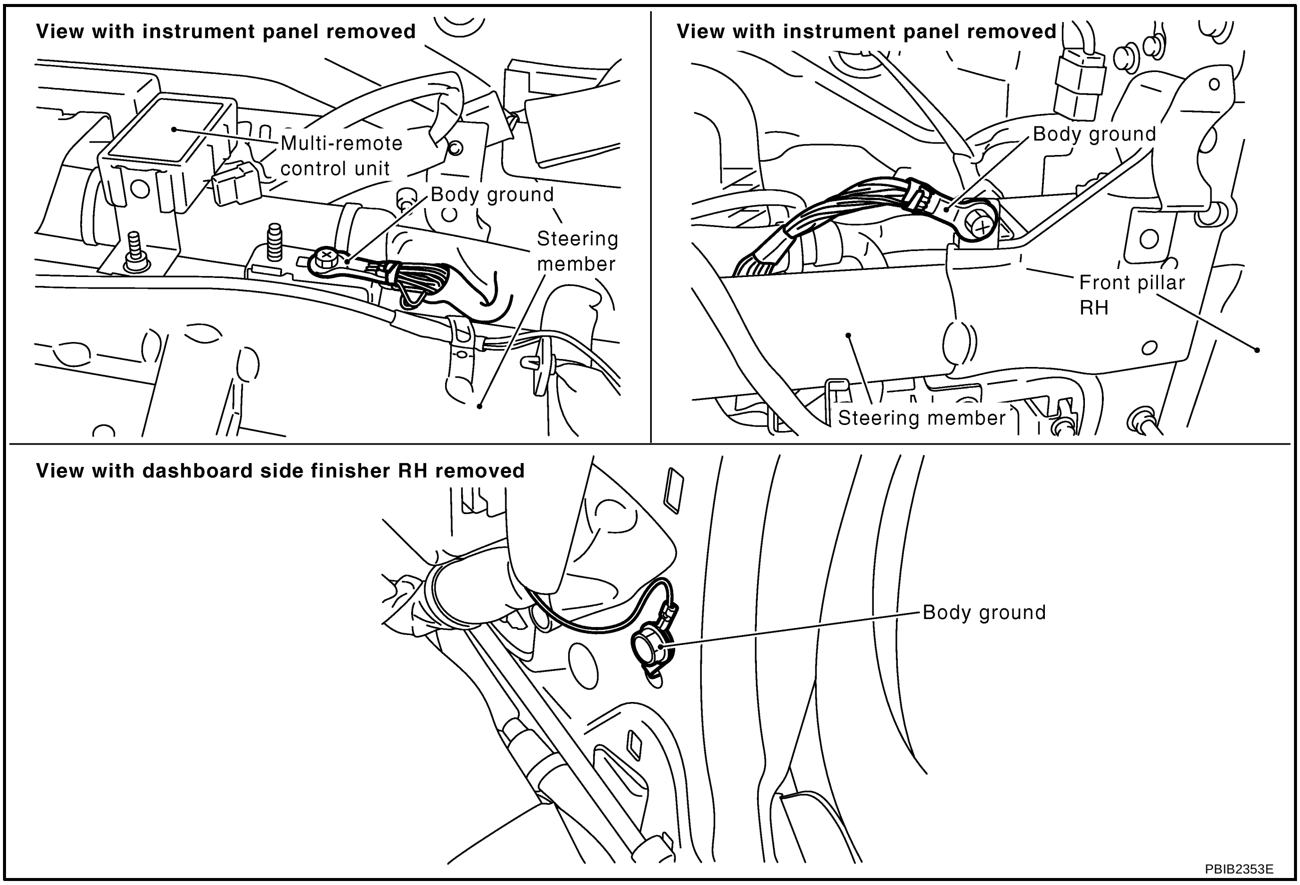

PBIB2353E

OK or NG

OK >> GO TO 2.
NG >> Repair or replace ground connections.

2. RETIGHTEN HEATED OXYGEN SENSOR 1

Loosen and retighten heated oxygen sensor 1.

Tightening torque: 50 N·m (5.1 kg-m, 37 ft-lb)

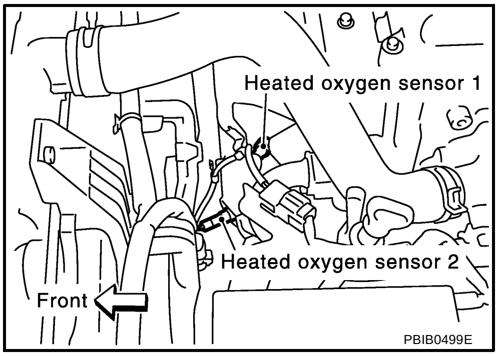

>> GO TO 3.

3. CLEAR THE SELF-LEARNING DATA

With CONSULT-II

1. Start engine and warm it up to normal operating temperature.
2. Select “SELF-LEARNING CONT” in “WORK SUPPORT” mode with CONSULT-II.
3. Clear the self-learning control coefficient by touching “CLEAR”.
4. Run engine for at least 10 minutes at idle speed.
   Is the 1st trip DTC P0172 detected?
   Is it difficult to start engine?

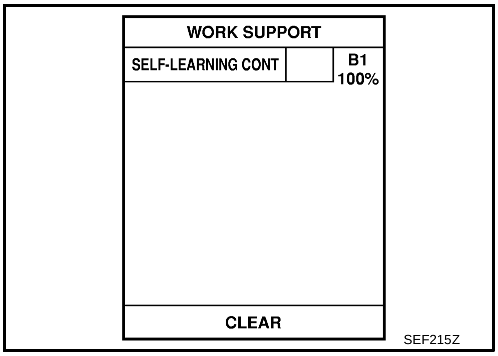

Without CONSULT-II

1. Start engine and warm it up to normal operating temperature.
2. Turn ignition switch OFF.
3. Disconnect mass air flow sensor harness connector, and restart and run engine for at least 5 seconds at idle speed.
4. Stop engine and reconnect mass air flow sensor harness connector.
5. Make sure DTC P0102 is displayed.
6. Erase the DTC memory. Refer to EC-59, "HOW TO ERASE EMISSION-RELATED DIAGNOSTIC INFORMATION" .
7. Make sure DTC P0000 is displayed.
8. Run engine for at least 10 minutes at idle speed.
   Is the 1st trip DTC P0172 detected?
   Is it difficult to start engine?

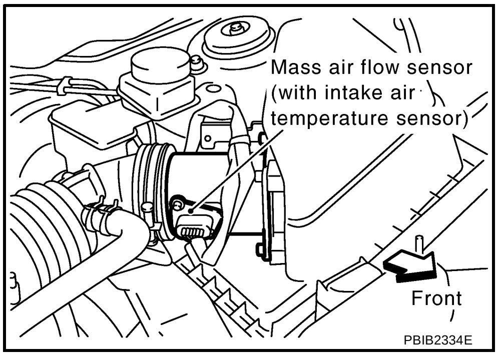

Yes or No

Yes >> Perform trouble diagnosis for DTC P0172. Refer to EC-273 .
No >> GO TO 4.

4. CHECK HO2S1 CONNECTOR FOR WATER

1. Turn ignition switch OFF.
2. Disconnect heated oxygen sensor 1 harness connector.
3. Check connectors for water.

Water should not exist.

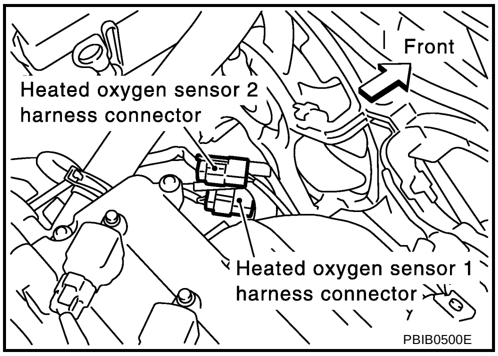

OK or NG

OK >> GO TO 5.
NG >> Repair or replace harness or connectors.

5. CHECK HEATED OXYGEN SENSOR 1 HEATER

Refer to EC-174, "Component Inspection" .

OK or NG

OK >> GO TO 6.
NG >> Replace heated oxygen sensor 1.

6. CHECK HEATED OXYGEN SENSOR 1

Refer to EC-174, "Component Inspection" .

OK or NG

OK >> GO TO 7.
NG >> Replace heated oxygen sensor 1.

7. CHECK INTERMITTENT INCIDENT

Refer to EC-153, "TROUBLE DIAGNOSIS FOR INTERMITTENT INCIDENT" .

>> **INSPECTION END**

Component Inspection

ABS00D7S

HEATED OXYGEN SENSOR 1

With CONSULT-II

1. Start engine and warm it up to normal operating temperature.
2. Select “MANU TRIG” and adjust “TRIGGER POINT” to 100% in “DATA MONITOR” mode with CONSULT-II.
3. Select “HO2S1 (B1)” and “HO2S1 MNTR (B1)”.
4. Hold engine speed at 2,000 rpm under no load during the following steps.
5. Touch “RECORD” on CONSULT-II screen.

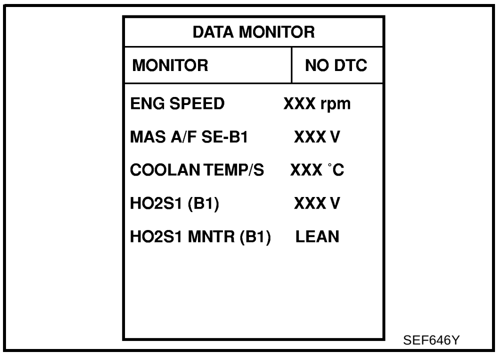

6. Check the following.
   - “HO2S1 MNTR (B1)” in “DATA MONITOR” mode changes from “RICH” to “LEAN” to “RICH” more than 5 times in 10 seconds.
     5 times (cycles) are counted as shown at right.
   - “HO2S1 (B1)” voltage goes above 0.6V at least once.
   - “HO2S1 (B1)” voltage goes below 0.3V at least once.
   - “HO2S1 (B1)” voltage never exceeds 1.0V.

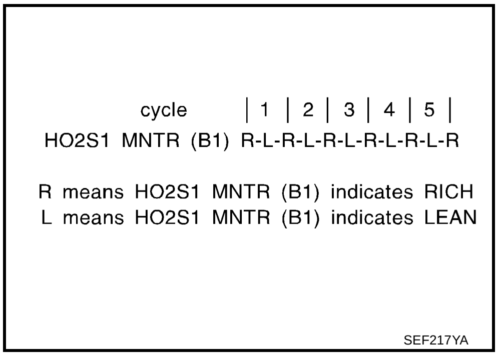

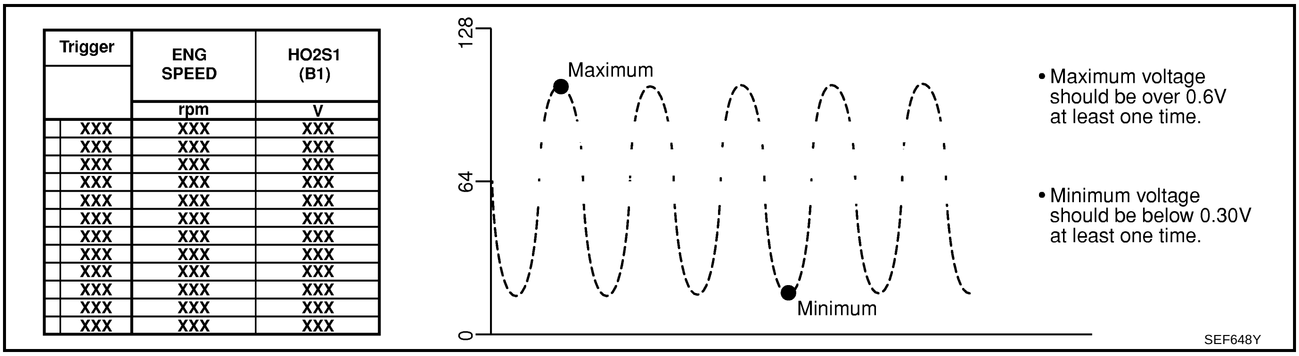

CAUTION:
- **Discard any heated oxygen sensor which has been dropped from a height of more than 0.5 m (19.7 in) onto a hard surface such as a concrete floor; use a new one.**
- **Before installing new oxygen sensor, clean exhaust system threads using Oxygen Sensor Thread Cleaner tool J-43897-18 or J-43897-12 and approved anti-seize lubricant.**

Without CONSULT-II

1. Start engine and warm it up to normal operating temperature.
2. Set voltmeter probes between ECM terminal 35 [HO2S1 (B1) signal] and ground.
3. Check the following with engine speed held at 2,000 rpm constant under no load.
   - The voltage fluctuates between 0 to 0.3V and 0.6 to 1.0V more than 5 times within 10 seconds.
   - The maximum voltage is over 0.6V at least 1 time.
   - The minimum voltage is below 0.3V at least 1 time.
   - The voltage never exceeds 1.0V.

   1 time: 0 - 0.3V → 0.6 - 1.0V → 0 - 0.3V
   2 times: 0 - 0.3V → 0.6 - 1.0V → 0 - 0.3V → 0.6 - 1.0V → 0 - 0.3V

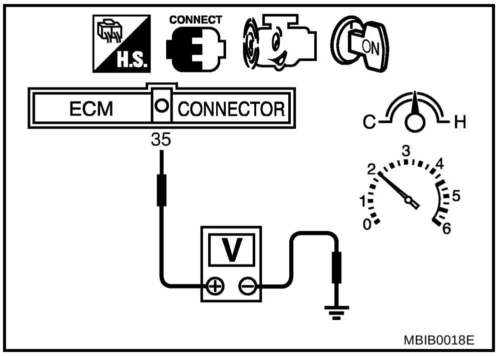

CAUTION:
- **Discard any heated oxygen sensor which has been dropped from a height of more than 0.5 m (19.7 in) onto a hard surface such as a concrete floor; use a new one.**
- **Before installing new oxygen sensor, clean exhaust system threads using Oxygen Sensor Thread Cleaner tool J-43897-18 or J-43897-12 and approved anti-seize lubricant.**

Removal and Installation

ABS00D7T

HEATED OXYGEN SENSOR 1

Refer to EM-20, "EXHAUST MANIFOLD AND THREE WAY CATALYST" .

DTC P1146 HO2S2

PFP:226A0

Component Description

ABS00CTV

The heated oxygen sensor 2, after three way catalyst (manifold), monitors the oxygen level in the exhaust gas on each bank.
Even if switching characteristics of the heated oxygen sensor 1 are shifted, the air-fuel ratio is controlled to stoichiometric, by the signal from the heated oxygen sensor 2.
This sensor is made of ceramic zirconia. The zirconia generates voltage from approximately 1V in richer conditions to 0V in leaner conditions.
Under normal conditions the heated oxygen sensor 2 is not used for engine control operation.

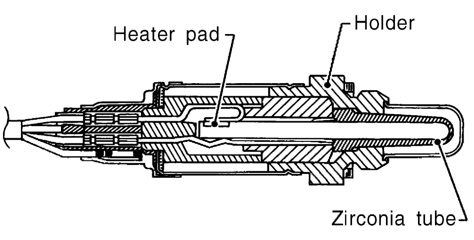

SEF327R

CONSULT-II Reference Value in Data Monitor Mode

ABS00CTW

Specification data are reference values.

MONITOR ITEM	CONDITION		SPECIFICATION
HO2S2 (B1)	● Engine: After warming up ● After keeping engine speed between 3,500 and 4,000 rpm for 1 minute and at idle for 1 minute under no load.	Revving engine from idle up to 3,000 rpm quickly.	0 - 0.3V ←→ Approx. 0.6 - 1.0V
HO2S2 MNTR (B1)	● Engine: After warming up ● After keeping engine speed between 3,500 and 4,000 rpm for 1 minute and at idle for 1 minute under no load.	Revving engine from idle up to 3,000 rpm quickly.	LEAN ←→ RICH

On Board Diagnosis Logic

ABS00CTX

The heated oxygen sensor 2 has a much longer switching time between rich and lean than the heated oxygen sensor 1. The oxygen storage capacity of the three way catalyst (manifold) causes the longer switching time. To judge the malfunctions of heated oxygen sensor 2, ECM monitors whether the minimum voltage of sensor is sufficiently low during the various driving condition such as fuel-cut.

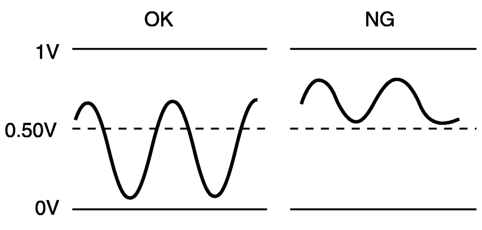

PBIB0554E

DTC No.	Trouble diagnosis name	DTC detecting condition	Possible cause
P1146 1146	Heated oxygen sensor 2 minimum voltage monitoring	The minimum voltage from the sensor is not reached to the specified voltage.	● Harness or connectors (The sensor circuit is open or shorted) ● Heated oxygen sensor 2 ● Fuel pressure ● Fuel injector

DTC Confirmation Procedure

ABS00CTY

NOTE:
If DTC confirmation Procedure has been previously conducted, always turn ignition switch OFF and wait at least 10 seconds before conducting the next test.

WITH CONSULT-II

TESTING CONDITION:
For the best results, perform DTC WORK SUPPORT at a temperature of 0 to 30°C (32 to 86°F).

1. Turn ignition switch ON and select “DATA MONITOR ” mode with CONSULT-II
2. Start engine and warm it up to the normal operating temperature.
3. Turn ignition switch OFF and wait at least 10 seconds.
4. Start engine and keep the engine speed between 3,500 and 4,000 rpm for at least 1 minute under no load.
5. Let engine idle for 1 minute.
6. Make sure that “COOLAN TEMP/S” indicates more than 70°C (158°F).
   If not, warm up engine and go to next step when “COOLAN TEMP/S” indication reaches to 70°C (158°F).

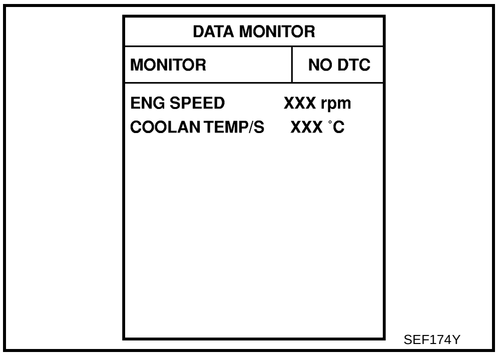

SEF174Y

7. Open engine hood.
8. Select “HO2S2 (B1) P1146” of “HO2S2” in “DTC WORK SUPPORT” mode with CONSULT-II.
9. Following the instruction of COSULT-II.

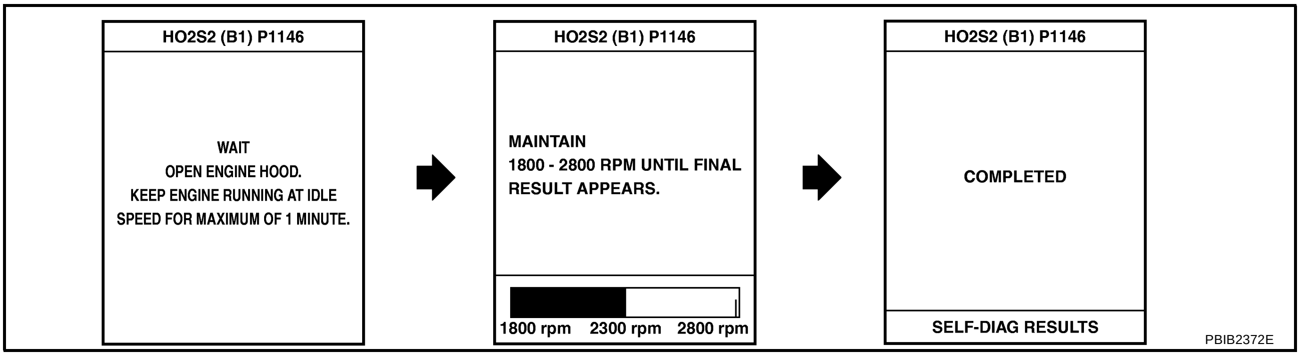

PBIB2372E

   NOTE:
   It will take at most 10 minutes until “COMPLETED” is displayed.
10. Make sure that “OK” is displayed after touching “SELF-DIAG RESULTS”.
    If “NG” is displayed, refer to EC-464, "Diagnostic Procedure" .
    If “CAN NOT BE DIAGNOSED” is displayed, perform the following.

a. Turn ignition switch OFF and leave the vehicle in a cool place (soak the vehicle).
b. Return to step 1.

Overall Function Check

ABS00CTZ

Use this procedure to check the overall function of the heated oxygen sensor 2 circuit. During this check, a 1st trip DTC might not be confirmed.

WITH GST

1. Start engine and warm it up to the normal operating temperature.
2. Turn ignition switch OFF and wait at least 10 seconds.
3. Start engine and keep the engine speed between 3,500 and 4,000 rpm for at least 1 minute under no load.
4. Let engine idle 1 minute.
5. Set voltmeter probes between ECM terminal 74 (HO2S2 signal) and ground.

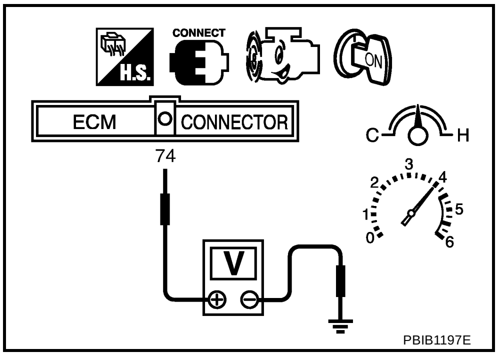

6. Check the voltage when revving up to 4,000 rpm under no load at least 10 times.
   (Depress and release accelerator pedal as soon as possible.)
   The voltage should be below 0.50V at least once during this procedure.
   If the voltage can be confirmed in step 6, step 7 is not necessary.
7. Keep vehicle at idling for 10 minutes, then check the voltage. Or check the voltage when coasting from 80 km/h (50 MPH) in D position with OD OFF (A/T) 3rd gear position (M/T).
   The voltage should be below 0.50V at least once during this procedure.
8. If NG, go to EC-464, "Diagnostic Procedure" .

Wiring Diagram

ABS00CU0

A
EC
C
D
E
F
G
H
I
J
K
L
M

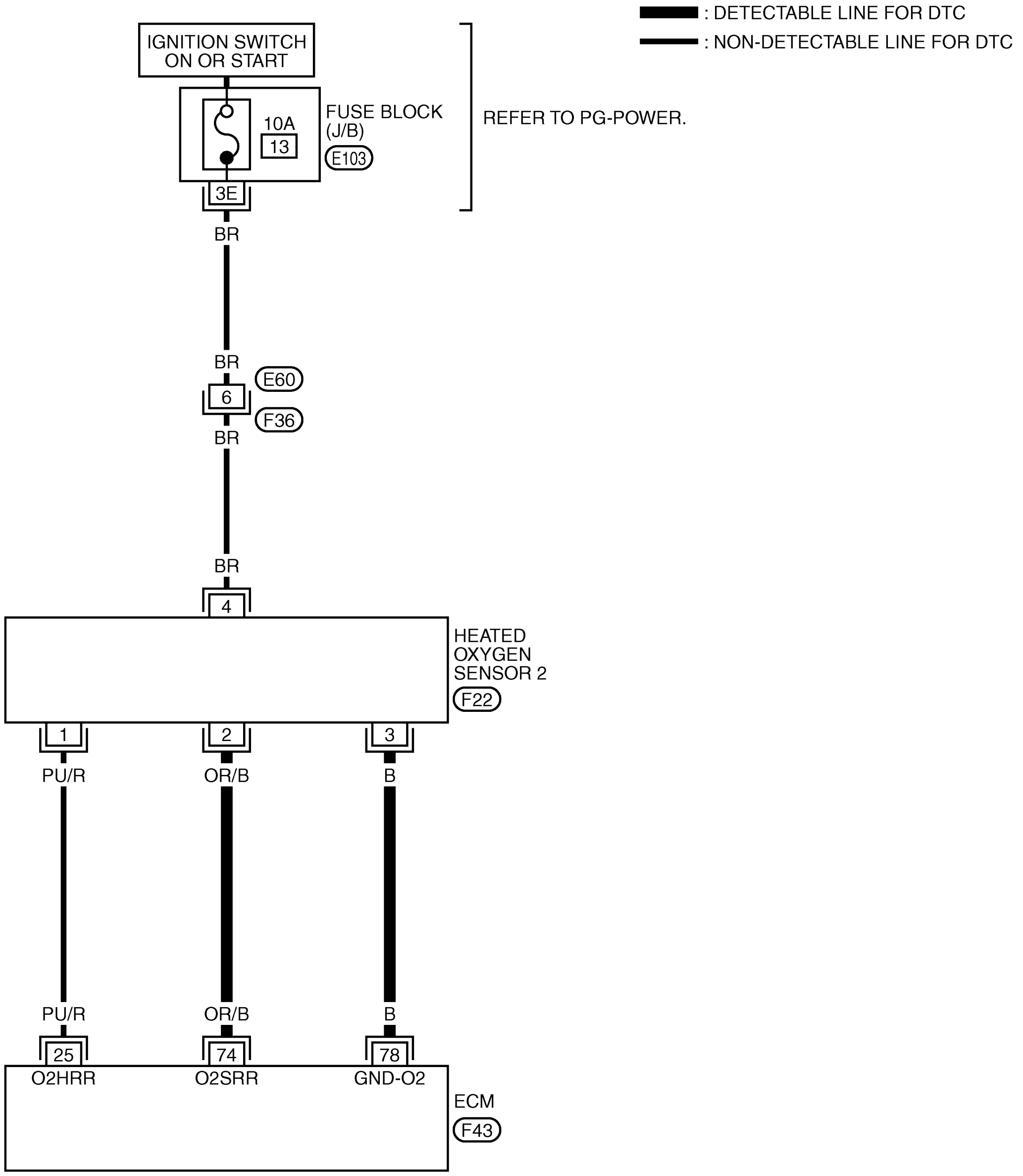

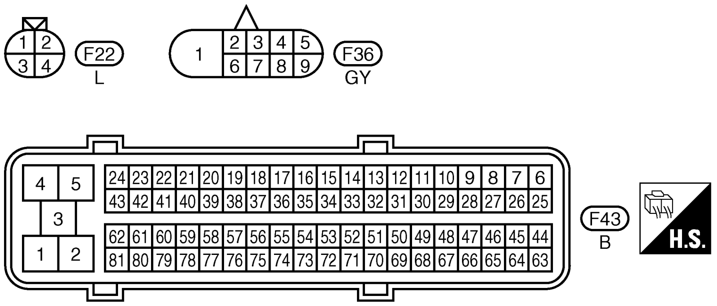

REFER TO THE FOLLOWING.
E103 -FUSE BLOCK-JUNCTION BOX (J/B)

TBWB0116E

Specification data are reference values and are measured between each terminal and ground.

CAUTION:

Do not use ECM ground terminals when measuring input/output voltage. Doing so may result in damage to the ECM's transistor. Use a ground other than ECM terminals, such as the ground.

TERMINAL NO.	WIRE COLOR	ITEM	CONDITION	DATA (DC Voltage)
74	OR/B	Heated oxygen sensor 2	**[Engine is running]** ● **Warm-up condition** ● Revving engine from idle up to 3,000 rpm quickly after the following conditions are met. ● Keeping the engine speed between 3,500 and 4,000 rpm for 1 minute and at idle for 1 minute under no load.	0 - Approximately 1.0V
78	B	Sensor ground (Heated oxygen sensor)	**[Engine is running]** ● **Warm-up condition** ● Idle speed	Approximately 0V

Diagnostic Procedure

ABS00D8O

1. CHECK GROUND CONNECTIONS

1. Turn ignition switch OFF.
2. Loosen and retighten ground three screws on the body.
   Refer to EC-161, "Ground Inspection" .

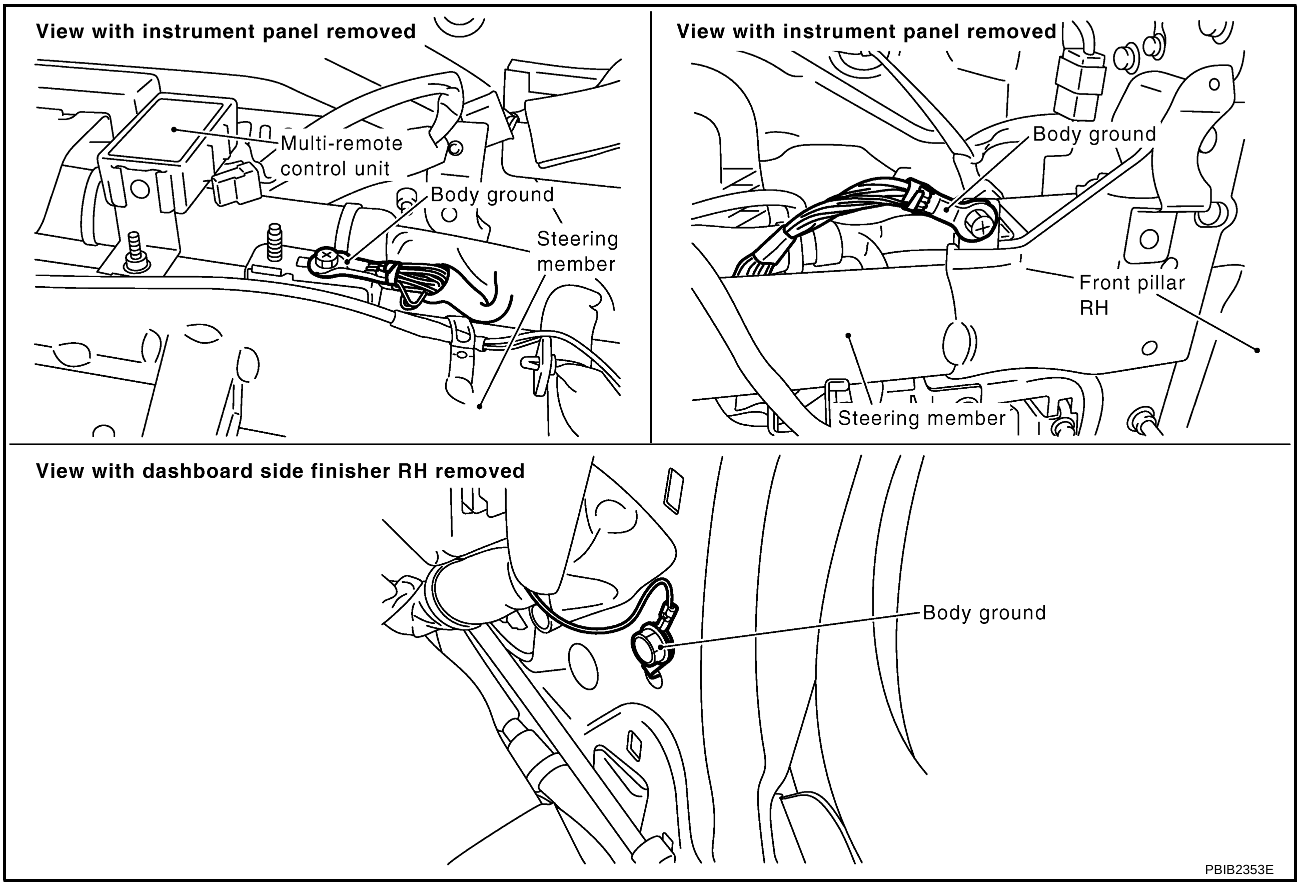

OK or NG

OK >> GO TO 2.

NG >> Repair or replace ground connections.

2. CLEAR THE SELF-LEARNING DATA

With CONSULT-II

1. Start engine and warm it up to normal operating temperature.
2. Select "SELF-LEARNING CONT" in "WORK SUPPORT" mode with CONSULT-II.
3. Clear the self-learning control coefficient by touching "CLEAR".
4. Run engine for at least 10 minutes at idle speed.
   Is the 1st trip DTC P0172 detected?
   Is it difficult to start engine?

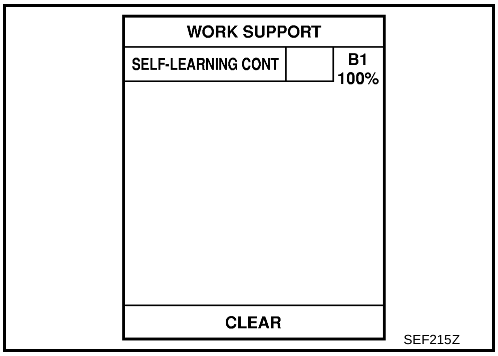

SEF215Z

Without CONSULT-II

1. Start engine and warm it up to normal operating temperature.
2. Turn ignition switch OFF.
3. Disconnect mass air flow sensor harness connector, and restart and run engine for at least 5 seconds at idle speed.
4. Stop engine and reconnect mass air flow sensor harness connector.
5. Make sure that DTC P0102 is displayed.
6. Erase the DTC memory. Refer to EC-59, "HOW TO ERASE EMISSION-RELATED DIAGNOSTIC INFORMATION" .
7. Make sure that DTC P0000 is displayed.
8. Run engine for at least 10 minutes at idle speed.
   Is the 1st trip DTC P0172 detected?
   Is it difficult to start engine?

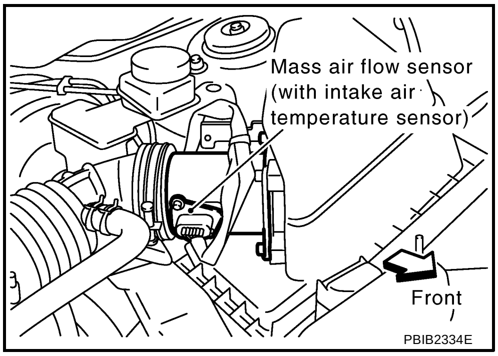

PBIB2334E

Yes or No

Yes >> Perform trouble diagnosis for DTC P0172. Refer to EC-273 .
No >> GO TO 3.

3. CHECK HO2S2 GROUND CIRCUIT FOR OPEN AND SHORT

1. Turn ignition switch OFF.
2. Disconnect heated oxygen sensor 2 harness connector.
3. Disconnect ECM harness connector.
4. Check harness continuity between HO2S2 terminal 3 and ECM terminal 78.
   Refer to Wiring Diagram.

   Continuity should exist.

5. Also check harness for short to ground and short to power.

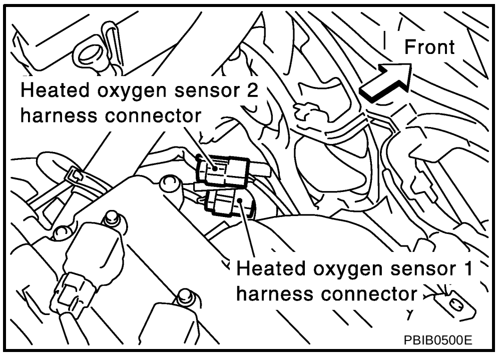

PBIB0500E

OK or NG

OK >> GO TO 4.
NG >> Repair open circuit or short to ground or short to power in harness or connectors.

4. CHECK HO2S2 INPUT SIGNAL CIRCUIT FOR OPEN AND SHORT

1. Check harness continuity between HO2S2 terminal 2 and ECM terminal 74.
   Refer to Wiring Diagram.

   Continuity should exist.

2. Check harness continuity between ECM terminal 74 or HO2S2 terminal 2 and ground.
   Refer to Wiring Diagram.

   Continuity should not exist.

3. Also check harness for short to power.

OK or NG

OK >> GO TO 5.
NG >> Repair open circuit or short to ground or short to power in harness or connectors.

5. CHECK HEATED OXYGEN SENSOR 2

Refer to EC-180, "Component Inspection" .

OK or NG

OK >> GO TO 6.
NG >> Replace heated oxygen sensor 2.

6. CHECK INTERMITTENT INCIDENT

Refer to EC-153, "TROUBLE DIAGNOSIS FOR INTERMITTENT INCIDENT" .

>> **INSPECTION END**

Component Inspection

ABS00CU2

HEATED OXYGEN SENSOR 2

With CONSULT-II

1. Start engine and warm it up to the normal operating temperature.
2. Turn ignition switch OFF and wait at least 10 seconds.
3. Start engine and keep the engine speed between 3,500 and 4,000 rpm for at least 1 minute under no load.
4. Let engine idle for 1 minute.
5. Select “FUEL INJECTION” in “ACTIVE TEST” mode, and select “HO2S2 (B1)” as the monitor item with CONSULT-II.

ACTIVE TEST	
FUEL INJECTION	25 %
MONITOR	
ENG SPEED	XXX rpm
HO2S2 (B1)	XXX V

PBIB1783E

6. Check “HO2S2 (B1)” at idle speed when adjusting “FUEL INJECTION” to ±25%.

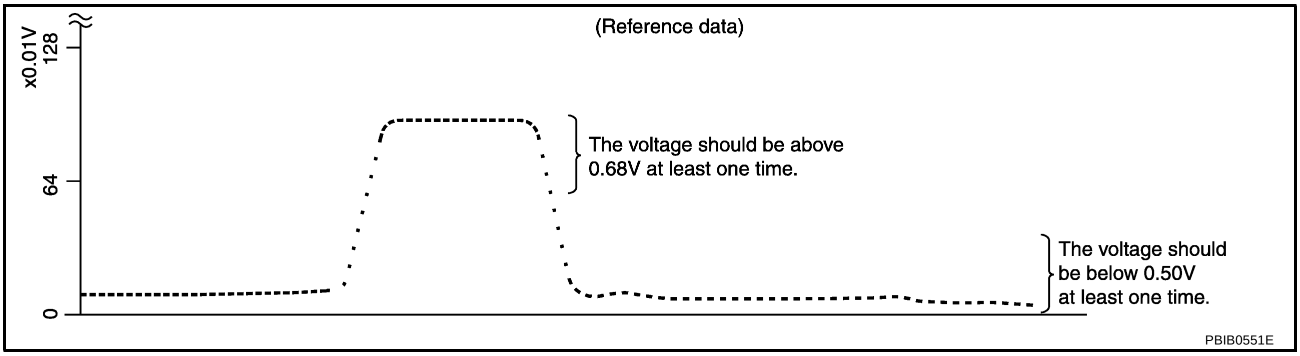

“HO2S2 (B1)” should be above 0.68V at least once when the “FUEL INJECTION” is +25%.
“HO2S2 (B1)” should be below 0.50V at least once when the “FUEL INJECTION” is –25%.

CAUTION:

- **Discard any heated oxygen sensor which has been dropped from a height of more than 0.5 m (19.7 in) onto a hard surface such as a concrete floor; use a new one.**
- **Before installing new oxygen sensor, clean exhaust system threads using Oxygen Sensor Thread Cleaner tool J-43897-18 or J-43897-12 and approved anti-seize lubricant.**

Without CONSULT-II

1. Start engine and warm it up to the normal operating temperature.
2. Turn ignition switch OFF and wait at least 10 seconds.
3. Start engine and keep the engine speed between 3,500 and 4,000 rpm for at least 1 minute under no load.
4. Let engine idle for 1 minute.
5. Set voltmeter probes between ECM terminal 74 (HO2S2 signal) and ground.
6. Check the voltage when revving up to 4,000 rpm under no load at least 10 times.
   (Depress and release accelerator pedal as soon as possible.)
   The voltage should be above 0.68V at least once during this procedure.
   If the voltage is above 0.68V at step 6, step 7 is not necessary.

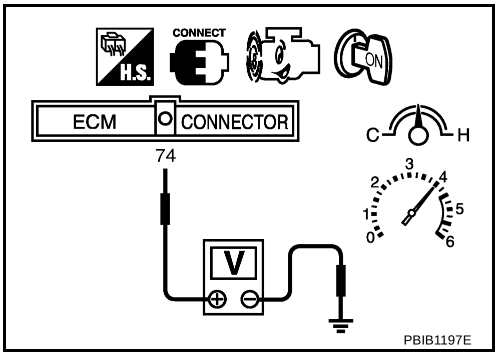

7. Keep vehicle idling for 10 minutes, then check voltage. Or check the voltage when coasting from 80 km/h (50 MPH) in D position with OD OFF (A/T), 3rd gear position (M/T).
   The voltage should be below 0.50V at least once during this procedure.
8. If NG, replace heated oxygen sensor 2.

CAUTION:

- **Discard any heated oxygen sensor which has been dropped from a height of more than 0.5 m (19.7 in) onto a hard surface such as a concrete floor; use a new one.**
- **Before installing new oxygen sensor, clean exhaust system threads using Oxygen Sensor Thread Cleaner tool J-43897-18 or J-43897-12 and approved anti-seize lubricant.**

Removal and Installation

ABS00CU3

HEATED OXYGEN SENSOR 2

Refer to EM-20, "EXHAUST MANIFOLD AND THREE WAY CATALYST" .

DTC P1147 HO2S2

PFP:226A0

Component Description

ABS00CU4

The heated oxygen sensor 2, after three way catalyst (manifold), monitors the oxygen level in the exhaust gas on each bank.
Even if switching characteristics of the heated oxygen sensor 1 are shifted, the air-fuel ratio is controlled to stoichiometric, by the signal from the heated oxygen sensor 2.
This sensor is made of ceramic zirconia. The zirconia generates voltage from approximately 1V in richer conditions to 0V in leaner conditions.
Under normal conditions the heated oxygen sensor 2 is not used for engine control operation.

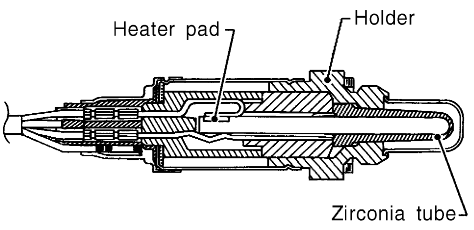

SEF327R

CONSULT-II Reference Value in Data Monitor Mode

ABS00CU5

Specification data are reference values.

MONITOR ITEM	CONDITION		SPECIFICATION
HO2S2 (B1)	● Engine: After warming up ● After keeping engine speed between 3,500 and 4,000 rpm for 1 minute and at idle for 1 minute under no load.	Revving engine from idle up to 3,000 rpm quickly.	0 - 0.3V ←→ Approx. 0.6 - 1.0V
HO2S2 MNTR (B1)	● Engine: After warming up ● After keeping engine speed between 3,500 and 4,000 rpm for 1 minute and at idle for 1 minute under no load.	Revving engine from idle up to 3,000 rpm quickly.	LEAN ←→ RICH

On Board Diagnosis Logic

ABS00CU6

The heated oxygen sensor 2 has a much longer switching time between rich and lean than the heated oxygen sensor 1. The oxygen storage capacity before the three way catalyst (manifold) causes the longer switching time. To judge the malfunctions of heated oxygen sensor 2, ECM monitors whether the maximum voltage of the sensor is sufficiently high during the various driving condition such as fuel-cut.

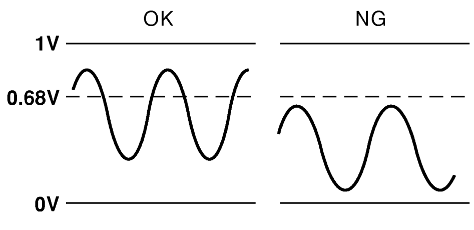

SEF259VA

DTC No.	Trouble diagnosis name	DTC detecting condition	Possible cause
P1147 1147	Heated oxygen sensor 2 maximum voltage monitoring	The maximum voltage from the sensor is not reached to the specified voltage.	● Harness or connectors (The sensor circuit is open or shorted) ● Heated oxygen sensor 2 ● Fuel pressure ● Fuel injector ● Intake air leaks

DTC Confirmation Procedure

ABS00CU7

NOTE:
If DTC confirmation Procedure has been previously conducted, always turn ignition switch OFF and wait at least 10 seconds before conducting the next test.

WITH CONSULT-II

TESTING CONDITION:
For the best results, perform DTC WORK SUPPORT at a temperature of 0 to 30°C (32 to 86°F).

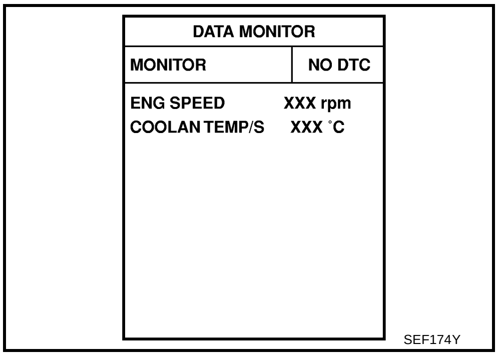

SEF174Y

1. Turn ignition switch ON and select “DATA MONITOR” mode with CONSULT-II.
2. Start engine and warm it up to the normal operating temperature.
3. Turn ignition switch OFF and wait at least 10 seconds.
4. Start engine and keep the engine speed between 3,500 and 4,000 rpm for at least 1 minute under no load.
5. Let engine idle for 1 minute.
6. Make sure that “COOLAN TEMP/S” indicates more than 70°C (158°F).
   If not, warm up engine and go to next step when “COOLAN TEMP/S” indication reaches to 70°C (158°F).
7. Open engine hood.
8. Select “HO2S2 (B1) P1147” of “HO2S2” in “DTC WORK SUPPORT” mode with CONSULT-II.
9. Following the instruction of CONSULT-II.

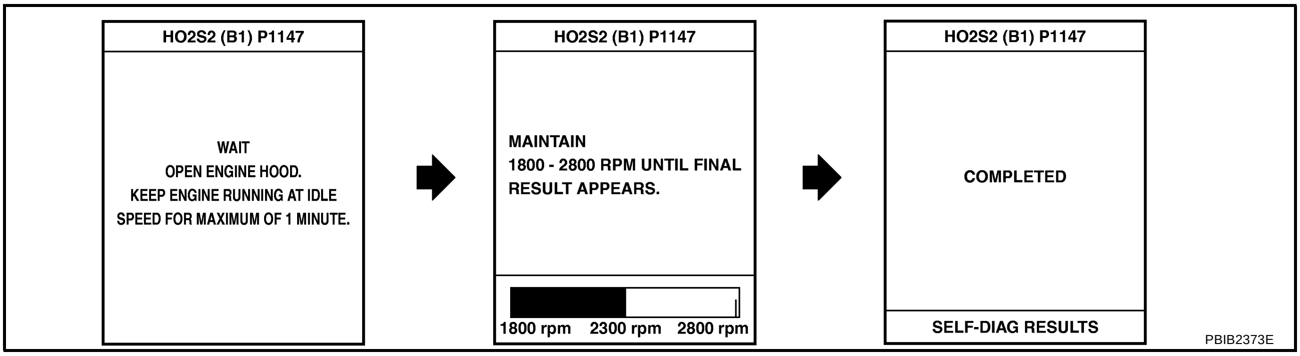

PBIB2373E

   NOTE:
   It will take at most 10 minutes until “COMPLETED” is displayed.
10. Make sure that “OK” is displayed after touching “SELF-DIAG RESULTS”.
    If “NG” is displayed, refer to EC-472, "Diagnostic Procedure" .
    If “CAN NOT BE DIAGNOSED” is displayed, perform the following.

a. Turn ignition switch OFF and leave the vehicle in a cool place (soak the vehicle).
b. Return to step 1.

Overall Function Check

ABS00CU8

Use this procedure to check the overall function of the heated oxygen sensor 2 circuit. During this check, a 1st trip DTC might not be confirmed.

WITH GST

1. Start engine and warm it up to the normal operating temperature.
2. Turn ignition switch OFF and wait at least 10 seconds.
3. Start engine and keep the engine speed between 3,500 and 4,000 rpm for at least 1 minute under no load.
4. Let engine idle 1 minute.
5. Set voltmeter probes between ECM terminal 74 (HO2S2 signal) and ground.

6. Check the voltage when revving up to 4,000 rpm under no load at least 10 times.
   (Depress and release accelerator pedal as soon as possible.)
   The voltage should be above 0.68V at least once during this procedure.
   If the voltage can be confirmed in step 6, step 7 is not necessary.
7. Keep vehicle idling for 10 minutes, then check the voltage. Or check the voltage when coasting from 80 km/h (50 MPH) in D position with “OD” OFF (A/T) 3rd gear position (M/T).
   The voltage should be above 0.68V at least once during this procedure.
8. If NG, go to EC-472, "Diagnostic Procedure" .

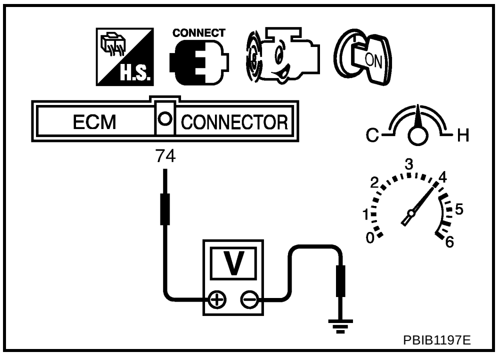

Wiring Diagram

ABS00CU9

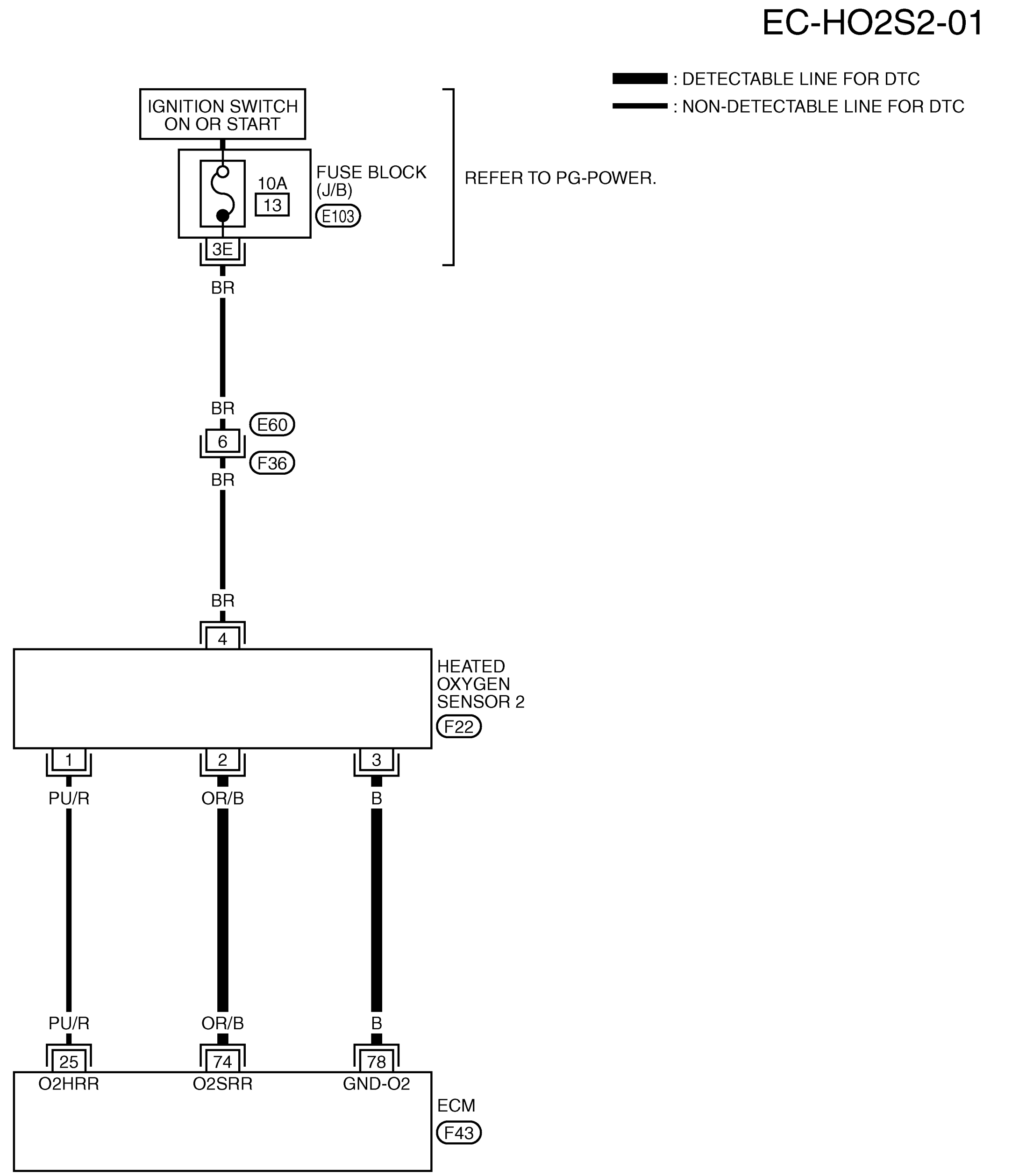

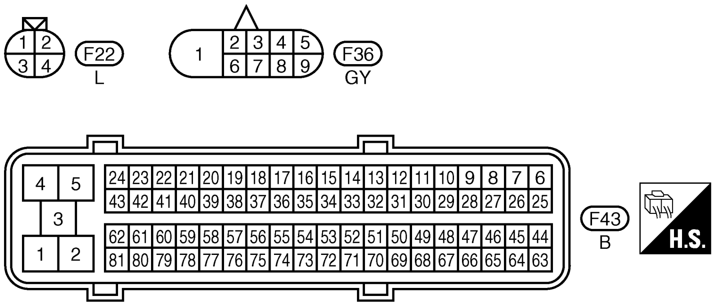

REFER TO THE FOLLOWING.

E103 -FUSE BLOCK-JUNCTION BOX (J/B)

TBWB0116E

Specification data are reference values and are measured between each terminal and ground.

CAUTION:

Do not use ECM ground terminals when measuring input/output voltage. Doing so may result in damage to the ECM's transistor. Use a ground other than ECM terminals, such as the ground.

TER-MINAL NO.	WIRE COLOR	ITEM	CONDITION	DATA (DC Voltage)
74	OR/B	Heated oxygen sensor 2	**[Engine is running]** ● **Warm-up condition** ● Revving engine from idle up to 3,000 rpm quickly after the following conditions are met. ● Keeping the engine speed between 3,500 and 4,000 rpm for 1 minute and at idle for 1 minute under no load.	0 - Approximately 1.0V
78	B	Sensor ground (Heated oxygen sensor)	**[Engine is running]** ● **Warm-up condition** ● Idle speed	Approximately 0V

Diagnostic Procedure

ABS00D8P

1. CHECK GROUND CONNECTIONS

1. Turn ignition switch OFF.
2. Loosen and retighten ground three screws on the body.
   Refer to EC-161, "Ground Inspection" .

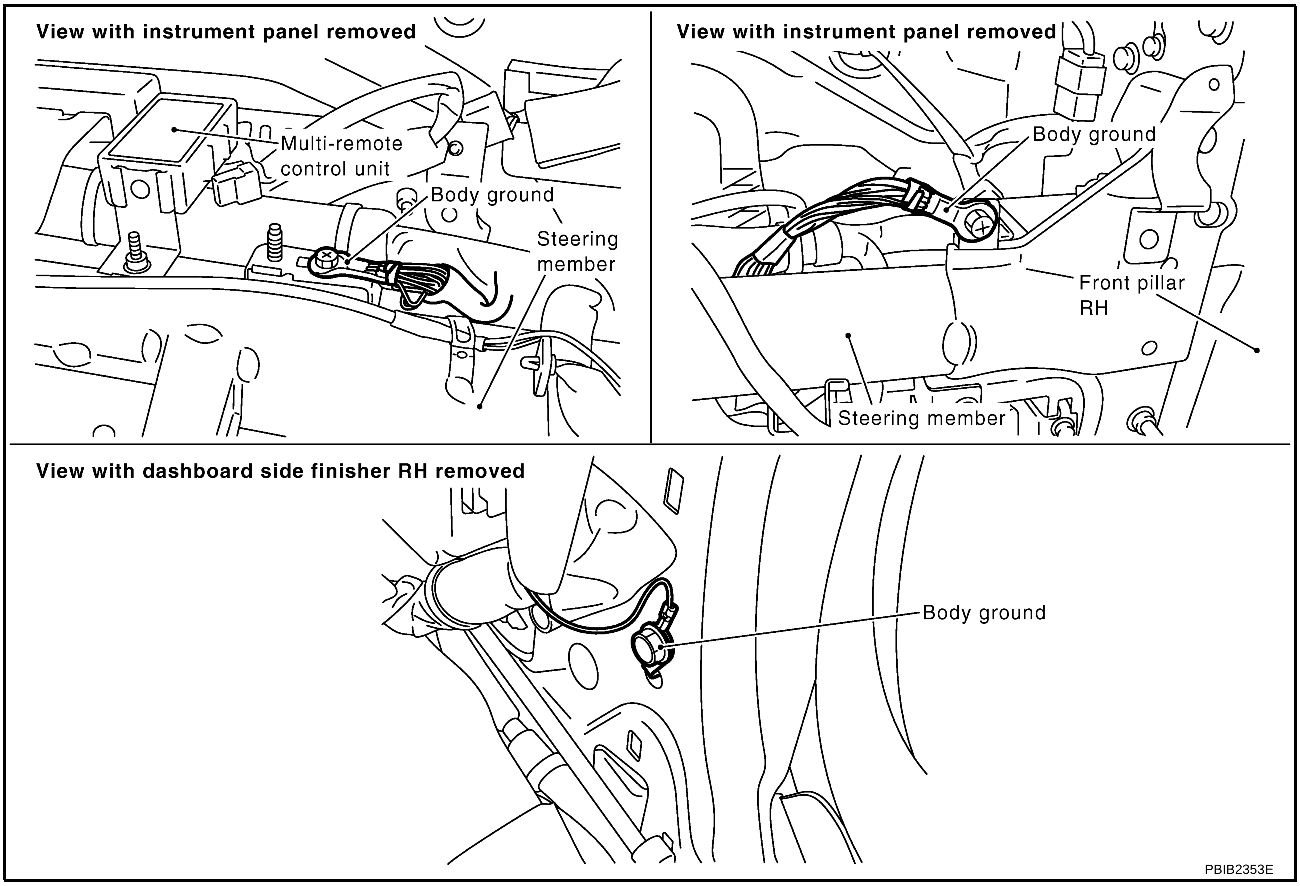

OK or NG

OK >> GO TO 2.

NG >> Repair or replace ground connections.

2. CLEAR THE SELF-LEARNING DATA

With CONSULT-II

1. Start engine and warm it up to normal operating temperature.
2. Select “SELF-LEARNING CONT” in “WORK SUPPORT” mode with CONSULT-II.
3. Clear the self-learning control coefficient by touching “CLEAR”.
4. Run engine for at least 10 minutes at idle speed.
   Is the 1st trip DTC P0171 detected?
   Is it difficult to start engine?

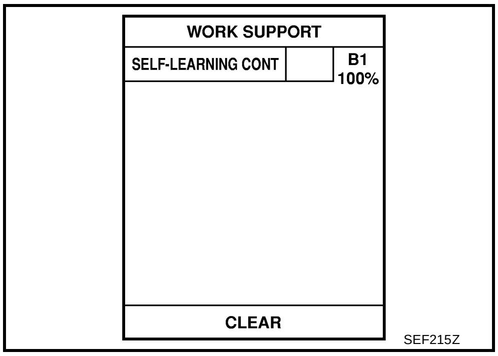

Without CONSULT-II

1. Start engine and warm it up to normal operating temperature.
2. Turn ignition switch OFF.
3. Disconnect mass air flow sensor harness connector, and restart and run engine for at least 5 seconds at idle speed.
4. Stop engine and reconnect mass air flow sensor harness connector.
5. Make sure that DTC P0102 is displayed.
6. Erase the DTC memory. Refer to EC-59, "HOW TO ERASE EMISSION-RELATED DIAGNOSTIC INFORMATION" .
7. Make sure that DTC P0000 is displayed.
8. Run engine for at least 10 minutes at idle speed.
   Is the 1st trip DTC P0171 detected?
   Is it difficult to start engine?

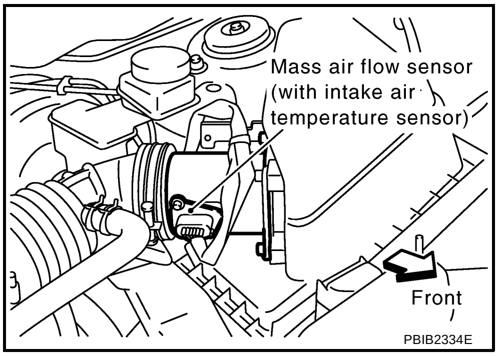

Yes or No

Yes >> Perform trouble diagnosis for DTC P0171. Refer to EC-266 .
No >> GO TO 3.

3. CHECK HO2S2 GROUND CIRCUIT FOR OPEN AND SHORT

1. Turn ignition switch OFF.
2. Disconnect heated oxygen sensor 2 harness connector.
3. Disconnect ECM harness connector.
4. Check harness continuity between HO2S2 terminal 3 and ECM terminal 78.
   Refer to Wiring Diagram.

   Continuity should exist.

5. Also check harness for short to ground and short to power.

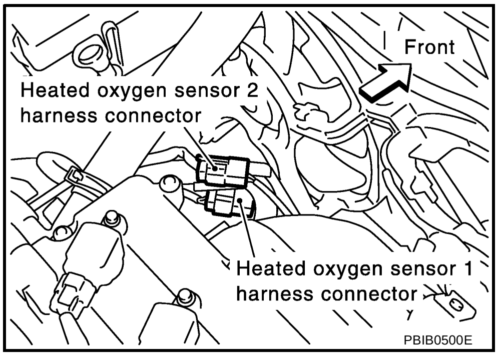

OK or NG

OK >> GO TO 4.
NG >> Repair open circuit or short to ground or short to power in harness or connectors.

4. CHECK HO2S2 INPUT SIGNAL CIRCUIT FOR OPEN AND SHORT

1. Check harness continuity between HO2S2 terminal 2 and ECM terminal 74.
   Refer to Wiring Diagram.

   Continuity should exist.

2. Check harness continuity between ECM terminal 74 or HO2S2 terminal 2 and ground.
   Refer to Wiring Diagram.

   Continuity should not exist.

3. Also check harness for short to power.

OK or NG

OK >> GO TO 5.
NG >> Repair open circuit or short to ground or short to power in harness or connectors.

5. CHECK HEATED OXYGEN SENSOR 2

Refer to EC-255, "Component Inspection" .

OK or NG

OK >> GO TO 6.
NG >> Replace heated oxygen sensor 2.

6. CHECK INTERMITTENT INCIDENT

Refer to EC-153, "TROUBLE DIAGNOSIS FOR INTERMITTENT INCIDENT" .

>> **INSPECTION END**

Component Inspection

ABS00CUB

HEATED OXYGEN SENSOR 2

With CONSULT-II

1. Start engine and warm it up to the normal operating temperature.
2. Turn ignition switch OFF and wait at least 10 seconds.
3. Start engine and keep the engine speed between 3,500 and 4,000 rpm for at least 1 minute under no load.
4. Let engine idle for 1 minute.
5. Select “FUEL INJECTION” in “ACTIVE TEST” mode, and select “HO2S2 (B1)” as the monitor item with CONSULT-II.

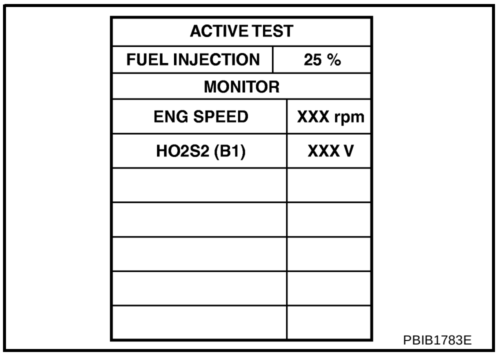

PBIB1783E

6. Check “HO2S2 (B1)” at idle speed when adjusting “FUEL INJECTION” to ±25%.

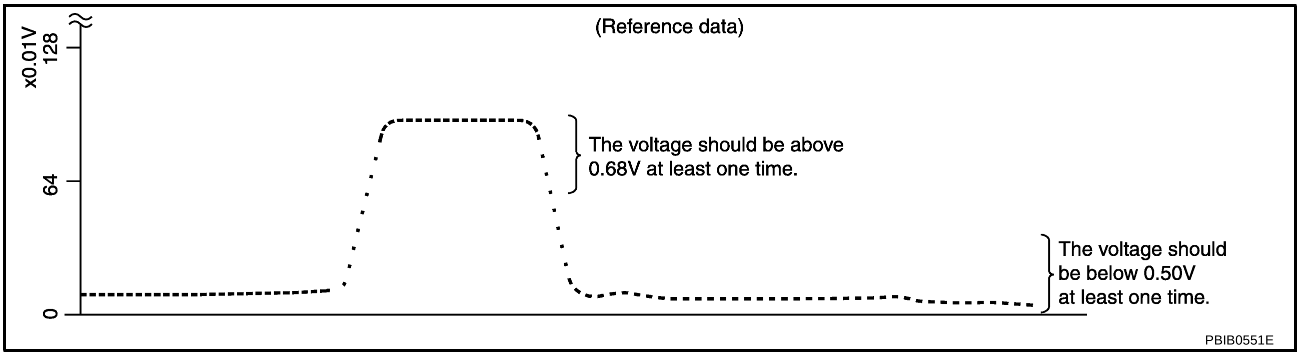

“HO2S2 (B1)” should be above 0.68V at least once when the “FUEL INJECTION” is +25%.
“HO2S2 (B1)” should be below 0.50V at least once when the “FUEL INJECTION” is –25%.

CAUTION:

- **Discard any heated oxygen sensor which has been dropped from a height of more than 0.5 m (19.7 in) onto a hard surface such as a concrete floor; use a new one.**
- **Before installing new oxygen sensor, clean exhaust system threads using Oxygen Sensor Thread Cleaner tool J-43897-18 or J-43897-12 and approved anti-seize lubricant.**

Without CONSULT-II

1. Start engine and warm it up to the normal operating temperature.
2. Turn ignition switch OFF and wait at least 10 seconds.
3. Start engine and keep the engine speed between 3,500 and 4,000 rpm for at least 1 minute under no load.
4. Let engine idle for 1 minute.
5. Set voltmeter probes between ECM terminal 74 (HO2S2 signal) and ground.
6. Check the voltage when revving up to 4,000 rpm under no load at least 10 times.
   (Depress and release accelerator pedal as soon as possible.)
   The voltage should be above 0.68V at least once during this procedure.
   If the voltage is above 0.68V at step 6, step 7 is not necessary.

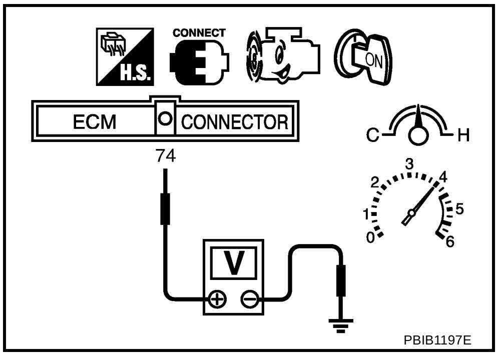

7. Keep vehicle at idling for 10 minutes, then check voltage. Or check the voltage when coasting from 80 km/h (50 MPH) in D position with OD OFF (A/T), 3rd gear position (M/T).
   The voltage should be below 0.50V at least once during this procedure.
8. If NG, replace heated oxygen sensor 2.

CAUTION:

- **Discard any heated oxygen sensor which has been dropped from a height of more than 0.5 m (19.7 in) onto a hard surface such as a concrete floor; use a new one.**
- **Before installing new oxygen sensor, clean exhaust system threads using Oxygen Sensor Thread Cleaner tool J-43897-18 or J-43897-12 and approved anti-seize lubricant.**

Removal and Installation

ABS00CUC

HEATED OXYGEN SENSOR 2

Refer to EM-20, "EXHAUST MANIFOLD AND THREE WAY CATALYST" .

DTC P1148 CLOSED LOOP CONTROL

PFP:22690

On Board Diagnosis Logic

ABS00D7U

This self-diagnosis has the one trip detection logic.

DTC No.	Trouble diagnosis name	DTC detecting condition	Possible cause
P1148 1148	Closed loop control function	The closed loop control function does not operate even when vehicle is driving in the specified condition.	• The heated oxygen sensor 1 circuit is open or shorted. • Heated oxygen sensor 1 • Heated oxygen sensor heater

DTC Confirmation Procedure

ABS00D7V

CAUTION:
Always drive vehicle at a safe speed.

NOTE:
If DTC Confirmation Procedure has been previously conducted, always turn ignition switch OFF and wait at least 10 seconds before conducting the next test.

TESTING CONDITION:

- **Never raise engine speed above 3,600 rpm during the DTC Confirmation Procedure. If the engine speed limit is exceeded, retry the procedure from step 2.**
- **Before performing the following procedure, confirm that battery voltage is more than 11V at idle.**

WITH CONSULT-II

1. Start engine and warm it up to normal operating temperature.
2. Select “DATA MONITOR” mode with CONSULT-II.
3. Hold engine speed at 2,000 rpm and check one of the following.
   - “HO2S1 (B1)” voltage should go above 0.70V at least once.
   - “HO2S1 (B1)” voltage should go below 0.21V at least once.

   If the check result is NG, perform EC-477, "Diagnostic Procedure" .
   If the check result is OK, perform the following step.
4. Let engine idle at least 5 minutes.
5. Maintain the following condition at least 50 consecutive seconds.

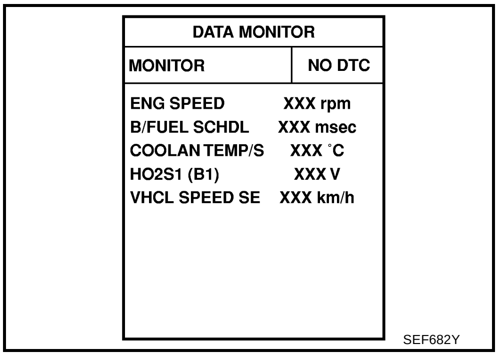

B/FUEL SCHDL	2.75 msec or more
ENG SPEED	More than 1,600 rpm
Shift lever	Suitable position
VHCL SPEED SE	More than 70 km/h (43 MPH)

   During this test, P0132 may be displayed on CONSULT-II screen.
6. If DTC is detected, go to EC-477, "Diagnostic Procedure" .

Overall Function Check

ABS00D7W

Use this procedure to check the overall function of the closed loop control. During this check, a DTC might not be confirmed.

WITH GST

1. Start engine and warm it up to normal operating temperature.

2. Set voltmeter probes between ECM terminal 35 [HO2S1 (B1) signal] and ground.
3. Check the following with engine speed held at 2,000 rpm constant under no-load.
   - The voltage should go above 0.70V at least once.
   - The voltage should go below 0.21V at least once.
4. If NG, go to EC-477, "Diagnostic Procedure" .

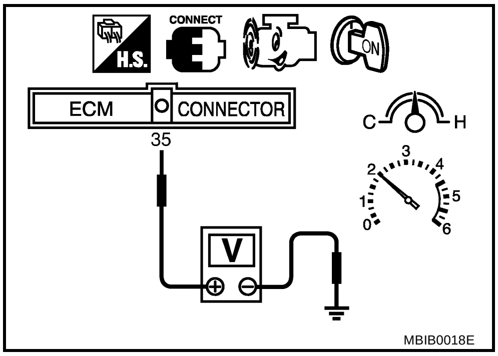

Diagnostic Procedure

ABS00D7X

Perform trouble diagnosis for DTC P0133, EC-233 .

DTC P1211 TCS CONTROL UNIT

PFP:47850

Description

ABS00D9A

The malfunction information related to TCS is transferred through the CAN communication line from VDC/TCS/ABS control unit (with VDC models) or "ABS actuator and electric unit (control unit)" (without VDC models) to ECM.

Be sure to erase the malfunction information such as DTC not only for VDC/TCS/ABS control unit (with VDC models) or "ABS actuator and electric unit (control unit)" (without VDC models) but also for ECM after TCS related repair.

On Board Diagnosis Logic

ABS00D9B

Freeze frame data is not stored in the ECM for this self-diagnosis. The MIL will not light up for this self-diagnosis.

DTC No.	Trouble diagnosis name	DTC detecting condition	Possible cause
P1211 1211	TCS control unit	ECM receives a malfunction information from VDC/TCS/ABS control unit (with VDC models) or "ABS actuator and electric unit (control unit)" (without VDC models).	• VDC/TCS/ABS control unit (with VDC models) • ABS actuator and electric unit (control unit) (without VDC models) • TCS related parts

DTC Confirmation Procedure

ABS00D9C

TESTING CONDITION:
Before performing the following procedure, confirm that battery voltage is more than 10.5V at idle.

WITH CONSULT-II

1. Turn ignition switch ON.
2. Select “DATA MONITOR” mode with CONSULT-II.
3. Start engine and let it idle for at least 60 seconds.
4. If 1st trip DTC is detected, go to EC-478, "Diagnostic Procedure".

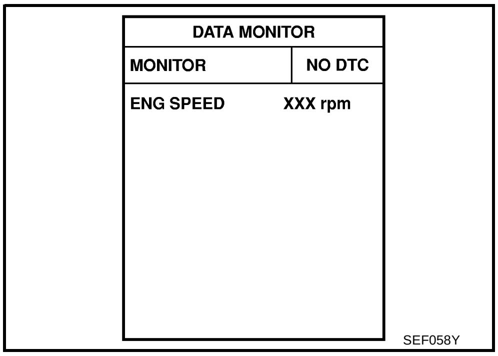

WITH GST

Follow the procedure “WITH CONSULT-II” above.

Diagnostic Procedure

ABS00D9D

Go to BRC-9, "TROUBLE DIAGNOSIS" (without VDC models) or BRC-48, "TROUBLE DIAGNOSIS" (with VDC models).

DTC P1212 TCS COMMUNICATION LINE

PFP:47850

Description

ABS00D9E

NOTE:
If DTC P1212 is displayed with DTC U1000 or U1001, first perform the trouble diagnosis for DTC U1000, U1001. Refer to EC-162, "DTC U1000, U1001 CAN COMMUNICATION LINE" .

This CAN communication line is used to control the smooth engine operation during the TCS operation. Pulse signals are exchanged between ECM and VDC/TCS/ABS control unit (with VDC models) or “ABS actuator and electric unit (control unit)” (without VDC models).

Be sure to erase the malfunction information such as DTC not only for VDC/TCS/ABS control unit (with VDC models) or “ABS actuator and electric unit (control unit)” (without VDC models) but also for ECM after TCS related repair.

On Board Diagnosis Logic

ABS00D9F

Freeze frame data is not stored in the ECM for this self-diagnosis. The MIL will not light up for this self-diagnosis.

DTC No.	Trouble diagnosis name	DTC detecting condition	Possible cause
P1212 1212	TCS communication line	ECM can not receive the information from VDC/TCS/ABS control unit (with VDC models) or “ABS actuator and electric unit (control unit)” (without VDC models) continuously.	• Harness or connectors (The CAN communication line is open or shorted.) • VDC/TCS/ABS control unit (with VDC models) • ABS actuator and electric unit (control unit) (without VDC models) • Dead (Weak) battery

DTC Confirmation Procedure

ABS00D9G

TESTING CONDITION:
Before performing the following procedure, confirm that battery voltage is more than 10.5V at idle.

WITH CONSULT-II

1. Turn ignition switch ON.
2. Select “DATA MONITOR” mode with CONSULT-II.
3. Start engine and let it idle for at least 10 seconds.
4. If a 1st trip DTC is detected, go to EC-479, "Diagnostic Procedure" .

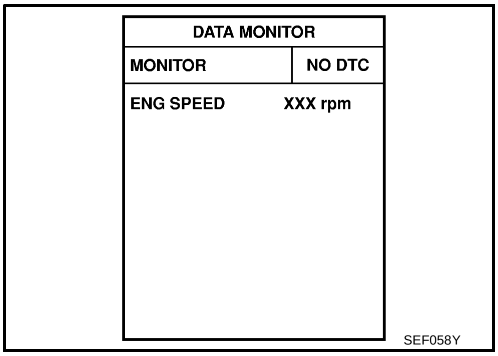

SEF058Y

WITH GST

Follow the procedure “WITH CONSULT-II” above.

Diagnostic Procedure

ABS00D9H

Go to BRC-9, "TROUBLE DIAGNOSIS" (without VDC models) or BRC-48, "TROUBLE DIAGNOSIS" (with VDC models).

DTC P1217 ENGINE OVER TEMPERATURE

PFP:00000

Description

ABS00CUE

SYSTEM DESCRIPTION

NOTE:

If DTC P1217 is displayed with DTC U1000 or U1001, first perform the trouble diagnosis for DTC U1000, U1001. Refer to **EC-162, "DTC U1000, U1001 CAN COMMUNICATION LINE"** **.**

Cooling Fan Control

Sensor	Input Signal to ECM	ECM function	Actuator
Crankshaft position sensor (POS) Camshaft position sensor (PHASE)	Engine speed*1	Cooling fan control	Cooling fan relays
Battery	Battery voltage*1		
Wheel sensor	Vehicle speed*2		
Engine coolant temperature sensor	Engine coolant temperature		
Air conditioner switch	Air conditioner ON signal		
Refrigerant pressure sensor	Refrigerant pressure		

*1: The ECM determines the start signal status by the signals of engine speed and battery voltage.

*2: This signal is sent to ECM through CAN communication line.

The ECM controls the cooling fan corresponding to the vehicle speed, engine coolant temperature, refrigerant pressure, and air conditioner ON signal. The control system has 3-step control [HIGH/LOW/OFF].

Cooling Fan Operation

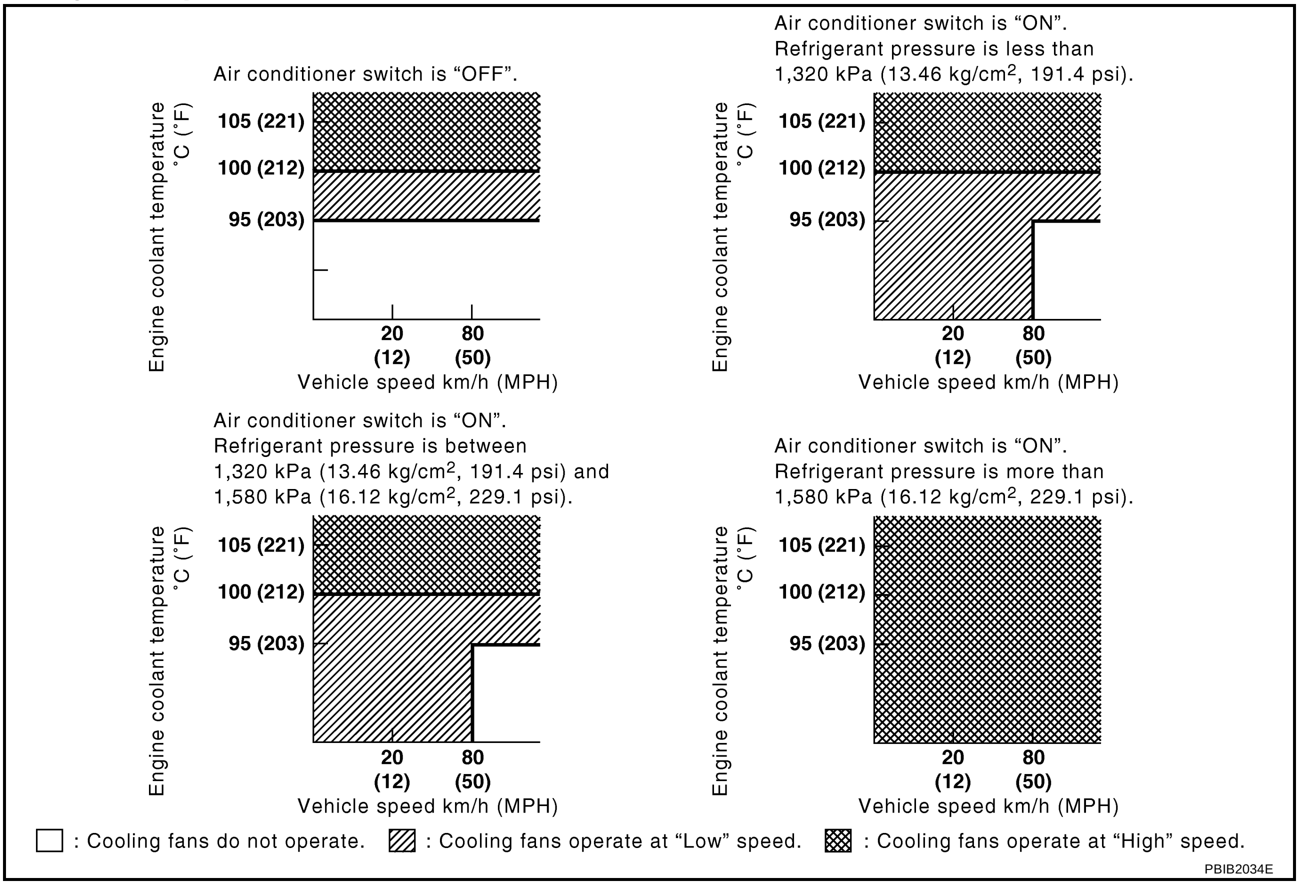

CONSULT-II Reference Value in Data Monitor Mode

ABS00CUF

Specification data are reference values.

MONITOR ITEM	CONDITION		SPECIFICATION
AIR COND SIG	● Engine: After warming up, idle the engine	Air conditioner switch: OFF	OFF
		Air conditioner switch: ON (Compressor operates.)	ON
COOLING FAN	● Engine: After warming up, idle the engine ● Air conditioner switch: OFF	Engine coolant temperature is 94°C (201°F) or less	OFF
		Engine coolant temperature is between 95°C (203°F) and 99°C (210°F)	LOW
		Engine coolant temperature is 100°C (212°F) or more	HIGH

On Board Diagnosis Logic

ABS00CUG

If the cooling fan or another component in the cooling system malfunctions, engine coolant temperature will rise. When the engine coolant temperature reaches an abnormally high temperature condition, a malfunction is indicated.

This self-diagnosis has the one trip detection logic.

DTC No.	Trouble diagnosis name	DTC detecting condition	Possible cause
P1217 1217	Engine over temperature (Overheat)	● Cooling fan does not operate properly (Overheat). ● Cooling fan system does not operate properly (Overheat). ● Engine coolant was not added to the system using the proper filling method. ● Engine coolant is not within the specified range.	● Harness or connectors (The cooling fan circuit is open or shorted.) ● Cooling fan relays ● Cooling fan ● Radiator hose ● Radiator ● Radiator cap ● Water pump ● Thermostat For more information, refer to EC-492, "Main 12 Causes of Overheating" .

CAUTION:

When a malfunction is indicated, be sure to replace the coolant. Refer to CO-8, "Changing Engine Coolant" . Also, replace the engine oil. Refer to LU-7, "Changing Engine Oil" .

1. **Fill radiator with coolant up to specified level with a filling speed of 2 liters per minute. Be sure to use coolant with the proper mixture ratio. Refer to MA-12, "Anti-Freeze Coolant Mixture Ratio" .**
2. **After refilling coolant, run engine to ensure that no water-flow noise is emitted.**

Overall Function Check

ABS00CUH

Use this procedure to check the overall function of the cooling fan. During this check, a DTC might not be confirmed.

WARNING:

Never remove the radiator cap when the engine is hot. Serious burns could be caused by high pressure fluid escaping from the radiator.

Wrap a thick cloth around cap. Carefully remove the cap by turning it a quarter turn to allow built-up pressure to escape. Then turn the cap all the way off.

WITH CONSULT-II

1. Check the coolant level in the reservoir tank and radiator.
   NOTE:
   Allow engine to cool before checking coolant level.
   If the coolant level in the reservoir tank and/or radiator is below the proper range, skip the following steps and go to EC-485, "Diagnostic Procedure"
2. Confirm whether customer filled the coolant or not. If customer filled the coolant, skip the following steps and go to EC-485, "Diagnostic Procedure" .
3. Turn ignition switch ON.

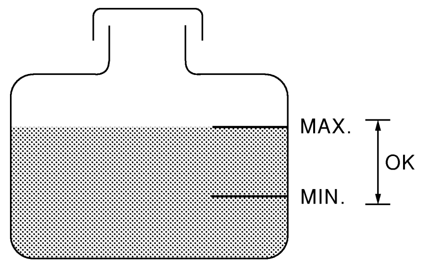

SEF621W

4. Perform "COOLING FAN" in "ACTIVE TEST" mode with CONSULT-II.
5. If the results are NG, go to EC-485, "Diagnostic Procedure" .

ACTIVE TEST	
COOLING FAN	OFF
MONITOR	
COOLAN TEMP/S	XXX °C

SEF646X

WITH GST

1. Check the coolant level in the reservoir tank and radiator.
   NOTE:
   Allow engine to cool before checking coolant level.
   If the coolant level in the reservoir tank and/or radiator is below the proper range, skip the following steps and go to EC-485, "Diagnostic Procedure" .
2. Confirm whether customer filled the coolant or not. If customer filled the coolant, skip the following steps and go to EC-485, "Diagnostic Procedure" .
3. Start engine.
   CAUTION:
   Be careful not to overheat engine.
4. Turn air conditioner switch ON.
5. Turn blower fan switch ON.
6. Make sure that cooling fans operates at low speed.
   If NG, go to EC-485, "Diagnostic Procedure" .
   If OK, go to the following step.
7. Turn ignition switch OFF.
8. Turn air conditioner switch and blower fan switch OFF.
9. Disconnect engine coolant temperature sensor harness connector.
10. Connect 150Ω resistor to engine coolant temperature sensor harness connector.

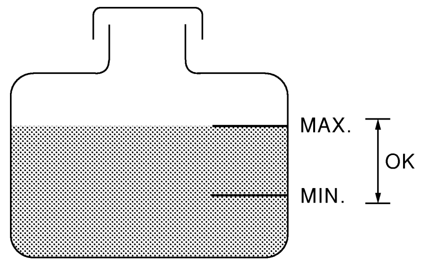

SEF621W

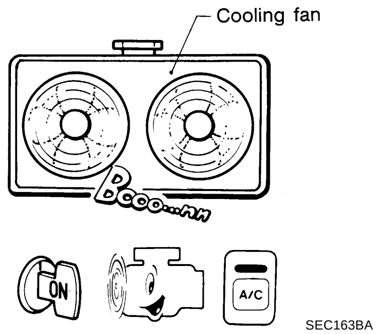

SEC163BA

11. Restart engine and make sure that cooling fan operates at higher speed than low speed.
    CAUTION:
    Be careful not to overheat engine.
12. If NG, go to EC-485, "Diagnostic Procedure" .

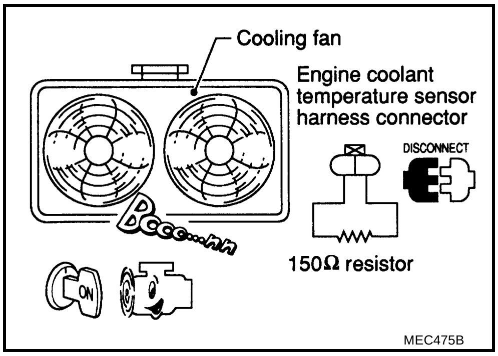

Wiring Diagram

ABS00CUI

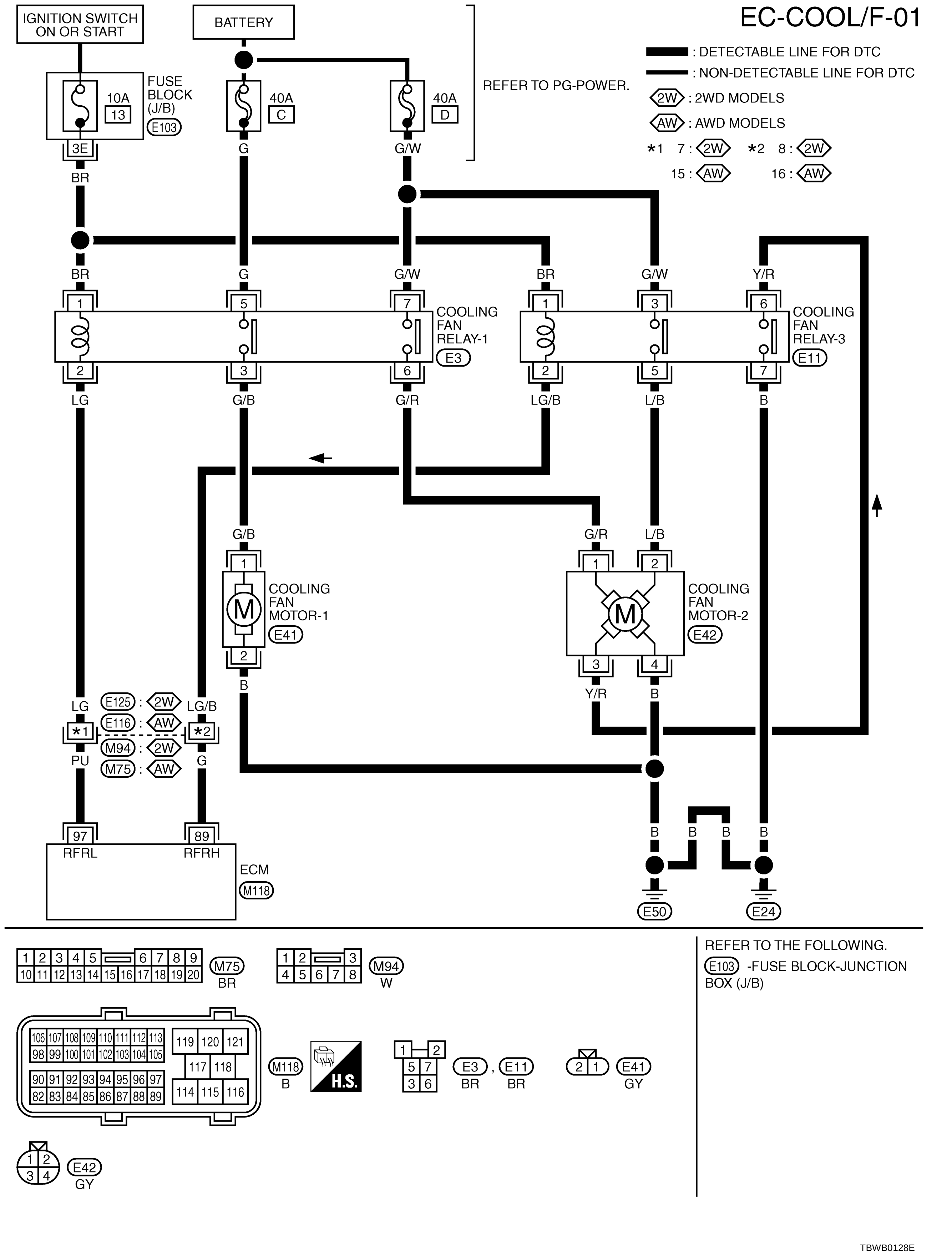

Specification data are reference values and are measured between each terminal and ground.

CAUTION:

Do not use ECM ground terminals when measuring input/output voltage. Doing so may result in damage to the ECM's transistor. Use a ground other than ECM terminals, such as the ground.

TERMINAL NO.	WIRE COLOR	ITEM	CONDITION	DATA (DC Voltage)
89	G	Cooling fan relay (High)	**[Engine is running]** ● Cooling fan is not operating	BATTERY VOLTAGE (11 - 14V)
			[Engine is running] ● Cooling fan is high speed operating	0 - 1.0V
97	PU	Cooling fan relay (Low)	**[Engine is running]** ● cooling fan is not operating	BATTERY VOLTAGE (11 - 14V)
			[Engine is running] ● Cooling fan is low speed operating	0 - 1.0V

Diagnostic Procedure

ABS00D8Q

1. INSPECTION START

Do you have CONSULT-II?

Yes or No

Yes >> GO TO 2.
No >> GO TO 4.

2. CHECK COOLING FAN LOW SPEED OPERATION

With CONSULT-II

1. Turn ignition switch ON.
2. Perform "COOLING FAN" in "ACTIVE TEST" mode with CONSULT-II and touch "LOW" on the CONSULT-II screen.
3. Make sure that cooling fans-1 and -2 operates at low speed.

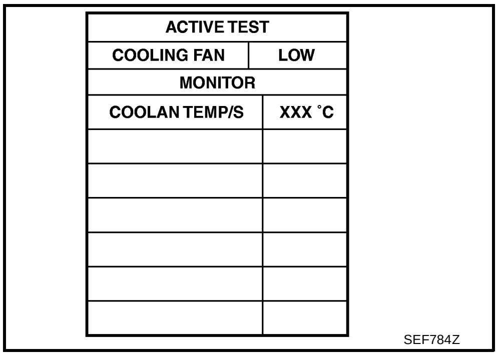

SEF784Z

OK or NG

OK >> GO TO 3.
NG >> Check cooling fan low speed control circuit. (Go to EC-489, "PROCEDURE A" .)

3. CHECK COOLING FAN HIGH SPEED OPERATION

With CONSULT-II

1. Touch "HI" on the CONSULT-II screen.
2. Make sure that cooling fans-1 and -2 operates at higher speed than low speed.

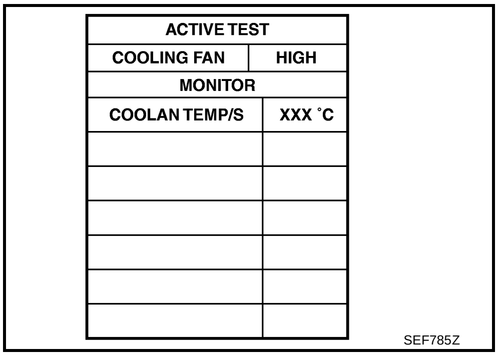

SEF785Z

OK or NG

OK >> GO TO 6.
NG >> Check cooling fan high speed control circuit. (Go to EC-491, "PROCEDURE B" .)

4. CHECK COOLING FAN LOW SPEED OPERATION

Without CONSULT-II

1. Turn ignition switch OFF.
2. Disconnect cooling fan relay-3.
3. Start engine and let it idle.
4. Turn air conditioner switch ON.
5. Turn blower fan switch ON.

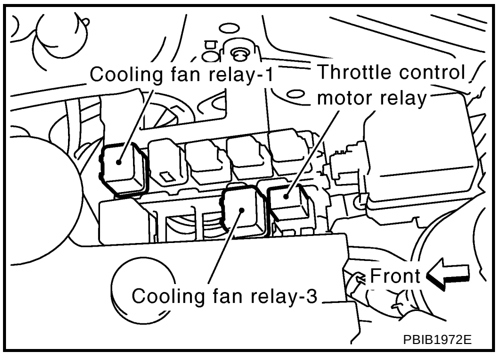

6. Make sure that cooling fans-1 and -2 operates at low speed.

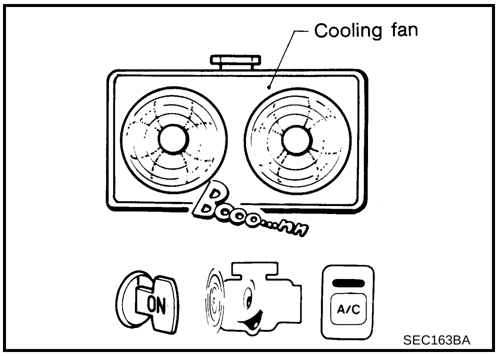

OK or NG

OK >> GO TO 5.
NG >> Check cooling fan low speed control circuit. (Go to EC-489, "PROCEDURE A" .)

5. CHECK COOLING FAN HIGH SPEED OPERATION

Without CONSULT-II

1. Turn air conditioner switch and blower fan switch OFF.
2. Stop engine and turn ignition switch OFF.
3. Reconnect cooling fan relay-3.
4. Disconnect engine coolant temperature sensor harness connector.
5. Connect 150Ω resistor to engine coolant temperature sensor harness connector.
6. Restart engine and make sure that cooling fans-1 and -2 operates at higher speed than low speed.

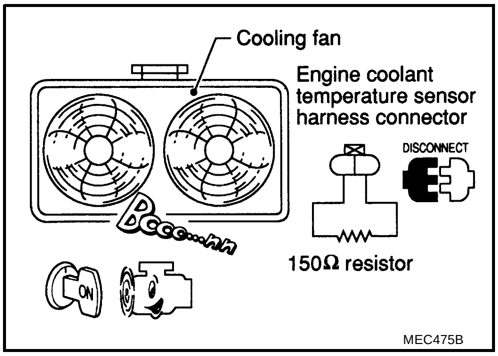

OK or NG

OK >> GO TO 6.
NG >> Check cooling fan high speed control circuit. (Go to EC-491, "PROCEDURE B" .)

6. CHECK COOLING SYSTEM FOR LEAK

Apply pressure to the cooling system with a tester, and check if the pressure drops.

Testing pressure: 157 kPa (1.57 bar, 1.6 kg/cm^2 , 23psi)

CAUTION:

Higher than the specified pressure may cause radiator damage.

Pressure should not drop.

OK or NG

OK >> GO TO 9.
NG >> GO TO 8.

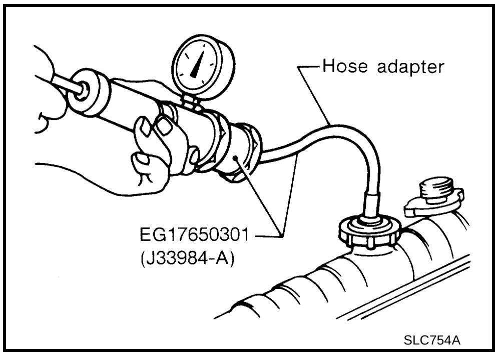

SLC754A

7. DETECT MALFUNCTIONING PART

Check the following for leak.

- Hose
- Radiator
- Water pump (Refer toCO-20, "WATER PUMP" .)

>> Repair or replace.

8. CHECK RADIATOR CAP

Apply pressure to cap with a tester and check radiator cap relief pressure.

Radiator cap relief pressure:	**59 - 98 kPa (0.59 - 0.98 bar, 0.6 - 1.0 kg/cm^2 , 9 - 14 psi)**

OK or NG

OK >> GO TO 11.
NG >> Replace radiator cap.

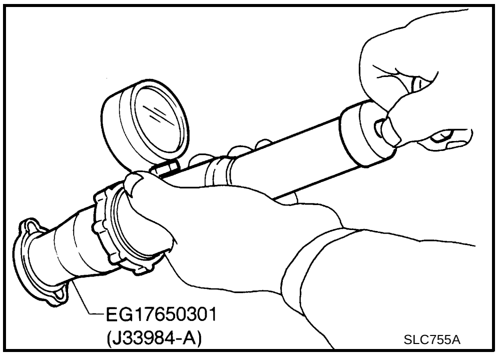

SLC755A

9. CHECK THERMOSTAT

1. Remove thermostat.
2. Check valve seating condition at normal room temperatures.
   It should seat tightly.
3. Check valve opening temperature and valve lift.

Valve opening temperature:	**82 °C (180 °F) [standard]**
Valve lift:	**More than 8 mm/95 °C (0.31 in/203 °F)**

4. Check if valve is closed at 5°C (9°F) below valve opening temperature.
   For details, refer to CO-22, "THERMOSTAT AND WATER CONTROL VALVE" .

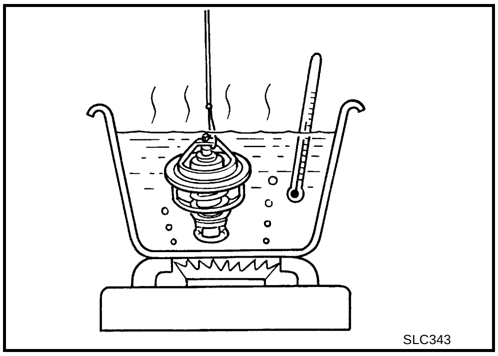

OK or NG

OK >> GO TO 12.
NG >> Replace thermostat.

10. CHECK ENGINE COOLANT TEMPERATURE SENSOR

Refer to EC-209, "Component Inspection" .

OK or NG

OK >> GO TO 13.
NG >> Replace engine coolant temperature sensor.

11. CHECK MAIN 12 CAUSES

If the cause cannot be isolated, go to EC-492, "Main 12 Causes of Overheating" .

>> **INSPECTION END**

PROCEDURE A

1. CHECK COOLING FAN POWER SUPPLY CIRCUIT

1. Turn ignition switch OFF.
2. Disconnect cooling fan relay-1.
3. Turn ignition switch ON.

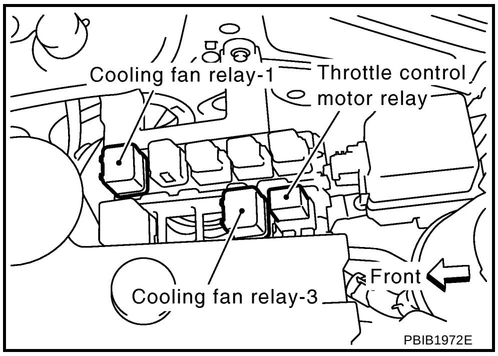

4. Check voltage between cooling fan relay-1 terminals 1, 5, 7 and ground with CONSULT-II or tester.

Voltage: Battery voltage

OK or NG

OK >> GO TO 3.
NG >> GO TO 2.

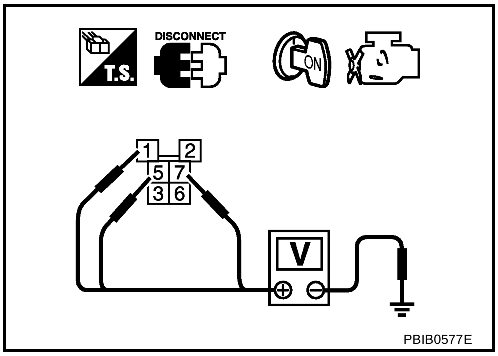

2. DETECT MALFUNCTIONING PART

Check the following.

- Fuse block (J/B) connector E103
- 10A fuse
- 40A fusible links
- Harness for open or short between cooling fan relay-1 and fuse
- Harness for open or short between cooling fan relay-1 and battery

>> Repair open circuit or short to ground or short to power in harness or connectors.

3. CHECK COOLING FAN MOTORS CONTROL CIRCUIT FOR OPEN AND SHORT

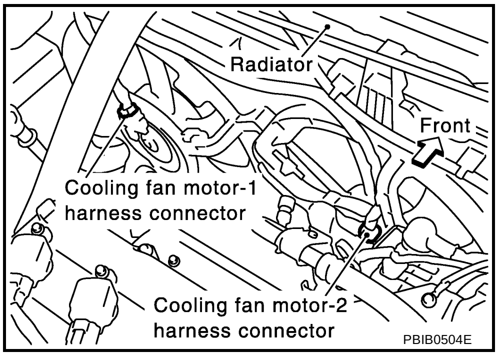

1. Turn ignition switch OFF.
2. Disconnect cooling fan motor-1 harness connector and cooling fan motor-2 harness connector.
3. Check harness continuity between the following; cooling fan relay-1 terminal 3 and cooling fan motor-1 terminal 1, cooling fan motor-1 terminal 2 and ground.

   Continuity should exist.

4. Also check harness for short to ground and short to power.
5. Check harness continuity between the following; cooling fan relay-1 terminal 6 and cooling fan motor-2 terminal 1, cooling fan motor-2 terminal 4 and ground.

   Continuity should exist.

6. Also check harness for short to ground and short to power.

OK or NG

OK >> GO TO 4.
NG >> Repair open circuit or short to ground or short to power in harness or connectors.

4. CHECK COOLING FAN MOTOR OUTPUT SIGNAL CIRCUIT FOR OPEN AND SHORT

1. Disconnect ECM harness connector.
2. Check harness continuity between cooling fan relay-1 terminal 2 and ECM terminal 97. Refer to Wiring Diagram.

   Continuity should exist.

3. Also check harness for short to ground and short to power.

OK or NG

OK >> GO TO 6.
NG >> GO TO 5.

5. DETECT MALFUNCTIONING PART

Check the following.

- Harness connectors E125, M94 (2WD models)
- Harness connectors E116, M75 (AWD models)
- Harness for open or short between cooling fan relay-1 and ECM

>> Repair open circuit or short to ground or short to power in harness or connectors.

6. CHECK COOLING FAN RELAY-1

Refer to EC-493, "Component Inspection" .

OK or NG

OK >> GO TO 7.
NG >> Replace cooling fan relay.

7. CHECK COOLING FAN MOTORS-1 AND -2

Refer to EC-493, "Component Inspection" .

OK or NG

OK >> GO TO 8.
NG >> Replace cooling fan motors.

8. CHECK INTERMITTENT INCIDENT

Perform EC-153, "TROUBLE DIAGNOSIS FOR INTERMITTENT INCIDENT" .

>> **INSPECTION END**

PROCEDURE B

1. CHECK COOLING FAN POWER SUPPLY CIRCUIT

1. Turn ignition switch OFF.
2. Disconnect cooling fan relay-3.
3. Turn ignition switch ON.

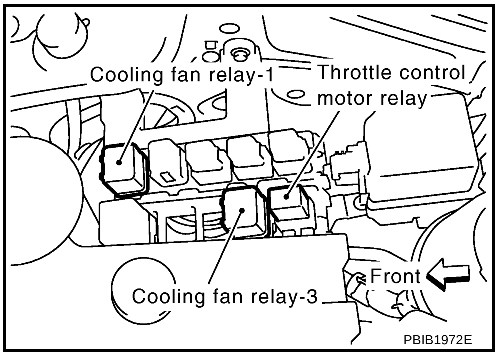

4. Check voltage between cooling fan relay-3 terminals 1, 3 and ground with CONSULT-II or tester.

Voltage: Battery voltage

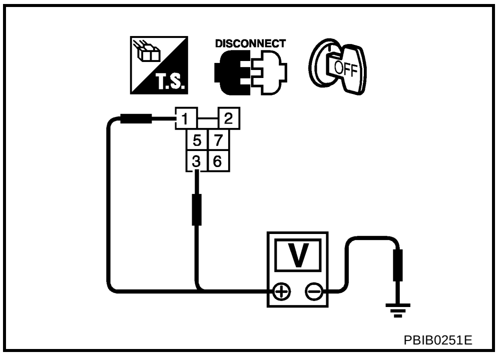

OK or NG

OK >> GO TO 3.
NG >> GO TO 2.

2. DETECT MALFUNCTIONING PART

Check the following.

- Harness for open or short between cooling fan relay-3 and fuse
- Harness for open or short between cooling fan relay-3 and battery

>> Repair open circuit or short to ground or short to power in harness or connectors.

3. CHECK COOLING FAN MOTORS CONTROL CIRCUIT FOR OPEN AND SHORT

1. Turn ignition switch OFF.
2. Disconnect cooling fan motor-2 harness connector.
3. Check harness continuity between the following; cooling fan relay-3 terminal 5 and cooling fan motor-2 terminal 2, cooling fan motor-2 terminal 3 and cooling fan relay-3 terminal 6, cooling fan relay-3 terminal 7 and ground.

Continuity should exist.

4. Also check harness for short to ground and short to power.

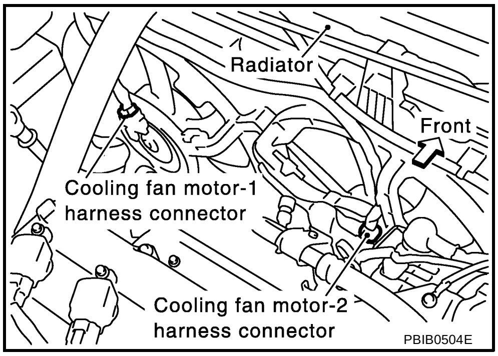

OK or NG

OK >> GO TO 4.
NG >> Repair open circuit or short to ground or short to power in harness or connectors.

4. CHECK COOLING FAN MOTOR OUTPUT SIGNAL CIRCUIT FOR OPEN AND SHORT

1. Disconnect ECM harness connector.
2. Check harness continuity between cooling fan relay-3 terminal 2 and ECM terminal 89. Refer to Wiring Diagram.

Continuity should exist.

3. Also check harness for short to ground and short to power.

OK or NG

OK >> GO TO 6.
NG >> GO TO 5.

5. DETECT MALFUNCTIONING PART

Check the following.

- Harness connectors E125, M94 (2WD models)
- Harness connectors E116, M75 (AWD models)
- Harness for open or short between cooling fan relay-3 and ECM

>> Repair open circuit or short to ground or short to power in harness or connectors.

6. CHECK COOLING FAN RELAY-3

Refer to EC-493, "Component Inspection" .

OK or NG

OK >> GO TO 7.
NG >> Replace cooling fan relay.

7. CHECK INTERMITTENT INCIDENT

Perform EC-153, "TROUBLE DIAGNOSIS FOR INTERMITTENT INCIDENT" .

>> **INSPECTION END**

Main 12 Causes of Overheating

ABS00CUK

Engine	Step	Inspection item	Equipment	Standard	Reference page
OFF	1	● Blocked radiator ● Blocked condenser ● Blocked radiator grille ● Blocked bumper	● Visual	No blocking	—
	2	● Coolant mixture	● Coolant tester	50 - 50% coolant mixture	See MA-12, "Anti-Freeze Coolant Mixture Ratio" .
	3	● Coolant level	● Visual	Coolant up to MAX level in reservoir tank and radiator filler neck	See CO-8, "Changing Engine Coolant" .
	4	● Radiator cap	● Pressure tester	59 - 98 kPa (0.6 - 1.0 kg/cm^2 , 9 - 14 psi) (Limit)	See CO-12, "Checking Radiator Cap" .
ON*2	5	● Coolant leaks	● Visual	No leaks	See CO-8, "CHECKING LEAKAGE" .
ON*2	6	● Thermostat	● Touch the upper and lower radiator hoses	Both hoses should be hot	See CO-22, "THERMOSTAT AND WATER CONTROL VALVE" , andCO-11, "RADIATOR" .

Engine	Step	Inspection item	Equipment	Standard	Reference page
ON*1	7	● Cooling fan	● CONSULT-II	Operating	See trouble diagnosis for DTC P1217 (EC-480).
OFF	8	● Combustion gas leak	● Color checker chemical tester 4 Gas analyzer	Negative	—
ON*3	9	● Coolant temperature gauge	● Visual	Gauge less than 3/4 when driving	—
		● Coolant overflow to reservoir tank	● Visual	No overflow during driving and idling	See CO-8, "Changing Engine Coolant" .
OFF*4	10	● Coolant return from reservoir tank to radiator	● Visual	Should be initial level in reservoir tank	SeeCO-8, "CHECKING ENGINE COOLANT LEVEL" .
OFF	11	● Cylinder head	● Straight gauge feeler gauge	0.1 mm (0.004 in) Maximum distortion (warping)	SeeEM-62, "CYLINDER HEAD" .
	12	● Cylinder block and pistons	● Visual	No scuffing on cylinder walls or piston	See EM-81, "CYLINDER BLOCK" .

*1: Turn the ignition switch ON.
*2: Engine running at 3,000 rpm for 10 minutes.
*3: Drive at 90 km/h (55 MPH) for 30 minutes and then let idle for 10 minutes.
*4: After 60 minutes of cool down time.
For more information, refer to CO-4, "OVERHEATING CAUSE ANALYSIS" .

Component Inspection

ABS00DAX

COOLING FAN RELAYS-1 AND -3

Check continuity between terminals 3 and 5, 6 and 7.

Conditions	Continuity
12V direct current supply between terminals 1 and 2	Yes
No current supply	No

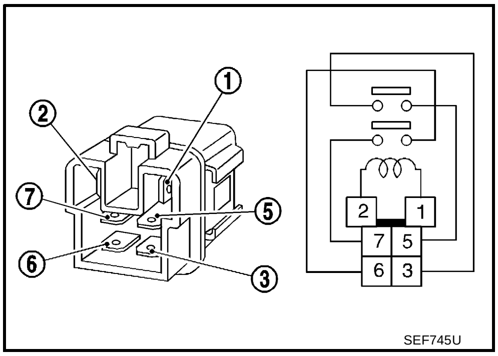

SEF745U

COOLING FAN MOTOR-1

1. Disconnect cooling fan motor harness connector.
2. Supply cooling fan motor terminals with battery voltage and check operation.

	Terminals	
	(+)	(-)
Cooling fan motor	1	2

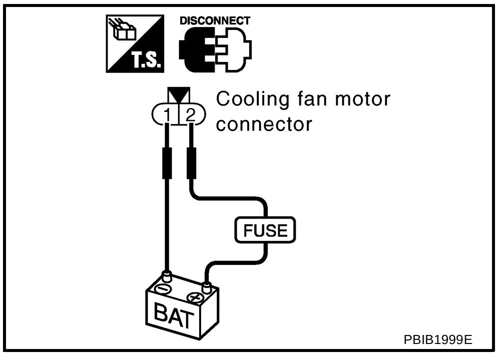

PBIB1999E

COOLING FAN MOTOR-2

1. Disconnect cooling fan motor harness connector.
2. Supply cooling fan motor terminals with battery voltage and check operation.

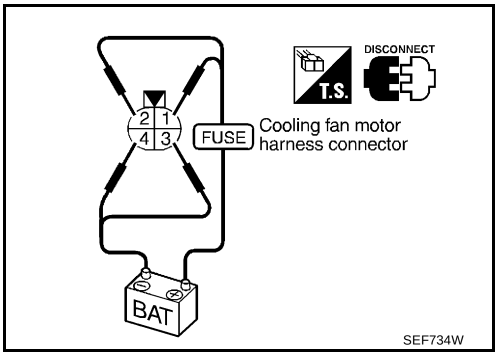

	Speed	Terminals	
		(+)	(-)
Cooling fan motor	Low	1	4
	High	1, 2	3, 4

DTC P1225 TP SENSOR

PFP:16119

Component Description

ABS00CUM

Electric throttle control actuator consists of throttle control motor, throttle position sensor, etc. The throttle position sensor responds to the throttle valve movement.

The throttle position sensor has two sensors. These sensors are a kind of potentiometers which transform the throttle valve position into output voltage, and emit the voltage signal to the ECM. In addition, these sensors detect the opening and closing speed of the throttle valve and feed the voltage signals to the ECM. The ECM judges the current opening angle of the throttle valve from these signals and the ECM controls the throttle control motor to make the throttle valve opening angle properly in response to driving condition.

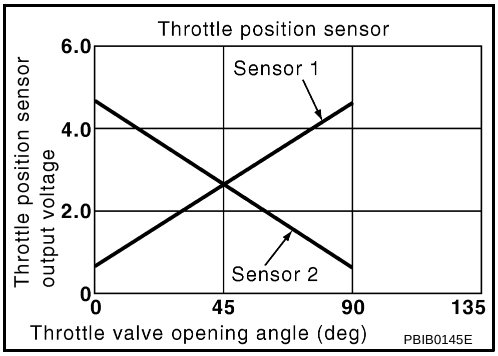

PBIB0145E

On Board Diagnosis Logic

ABS00CUN

The MIL will not light up for this self-diagnosis.

DTC No.	Trouble diagnosis name	DTC detecting condition	Possible cause
P1225 1225	Closed throttle position learning performance problem	Closed throttle position learning value is excessively low.	• Electric throttle control actuator (TP sensor 1 and 2)

DTC Confirmation Procedure

ABS00CUO

NOTE:

If DTC Confirmation Procedure has been previously conducted, always turn ignition switch OFF and wait at least 10 seconds before conducting the next test.

TESTING CONDITION:

Before performing the following procedure, confirm that battery voltage is more than 10V at idle.

WITH CONSULT-II

1. Turn ignition switch ON.
2. Select “DATA MONITOR” mode with CONSULT-II.
3. Turn ignition switch OFF, wait at least 10 seconds.
4. Turn ignition switch ON.
5. If 1st trip DTC is detected, go to EC-496, "Diagnostic Procedure" .

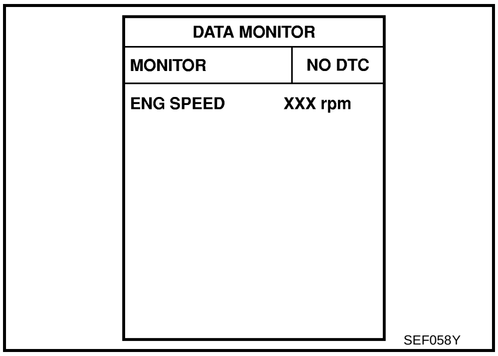

SEF058Y

WITH GST

Follow the procedure “WITH CONSULT-II” above.

Diagnostic Procedure

ABS00CUP

1. CHECK ELECTRIC THROTTLE CONTROL ACTUATOR VISUALLY

1. Turn ignition switch OFF.
2. Remove the intake air duct.
3. Check if foreign matter is caught between the throttle valve and the housing.

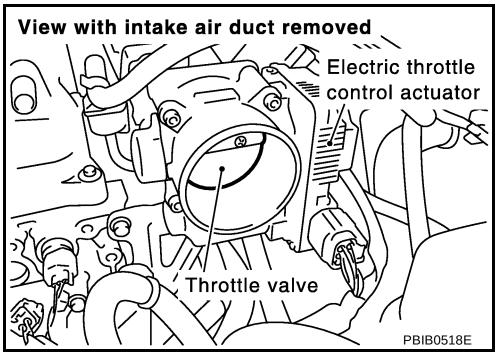

OK or NG

OK >> GO TO 2.
NG >> Remove the foreign matter and clean the electric throttle control actuator inside.

2. REPLACE ELECTRIC THROTTLE CONTROL ACTUATOR

1. Replace the electric throttle control actuator.
2. Perform EC-88, "Throttle Valve Closed Position Learning" .
3. Perform EC-88, "Idle Air Volume Learning" .

>> **INSPECTION END**

Remove and Installation

ABS00CUQ

ELECTRIC THROTTLE CONTROL ACTUATOR

Refer to EM-16, "INTAKE MANIFOLD" .

DTC P1226 TP SENSOR

PFP:16119

Component Description

ABS00CUR

Electric throttle control actuator consists of throttle control motor, throttle position sensor, etc. The throttle position sensor responds to the throttle valve movement.

The throttle position sensor has two sensors. These sensors are a kind of potentiometers which transform the throttle valve position into output voltage, and emit the voltage signal to the ECM. In addition, these sensors detect the opening and closing speed of the throttle valve and feed the voltage signals to the ECM. The ECM judges the current opening angle of the throttle valve from these signals and the ECM controls the throttle control motor to make the throttle valve opening angle properly in response to driving condition.

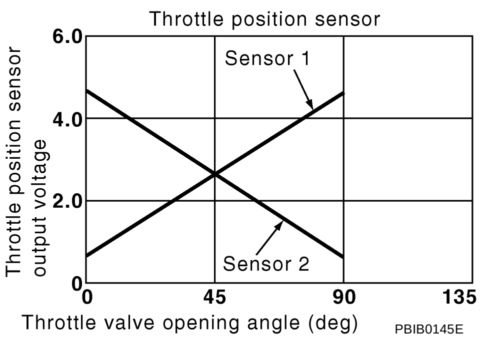

PBIB0145E

On Board Diagnosis Logic

ABS00CUS

The MIL will not light up for this diagnosis.

DTC No.	Trouble diagnosis name	DTC detecting condition	Possible cause
P1226 1226	Closed throttle position learning performance problem	Closed throttle position learning is not performed successfully, repeatedly.	• Electric throttle control actuator (TP sensor 1 and 2)

DTC Confirmation Procedure

ABS00CUT

NOTE:

If DTC Confirmation Procedure has been previously conducted, always turn ignition switch OFF and wait at least 10 seconds before conducting the next test.

TESTING CONDITION:

Before performing the following procedure, confirm that battery voltage is more than 10V at idle.

WITH CONSULT-II

1. Turn ignition switch ON.
2. Select “DATA MONITOR” mode with CONSULT-II.
3. Turn ignition switch OFF, wait at least 10 seconds.
4. Turn ignition switch ON.
5. Repeat steps 3 and 4 for 32 times.
6. If 1st trip DTC is detected, go to EC-498, "Diagnostic Procedure" .

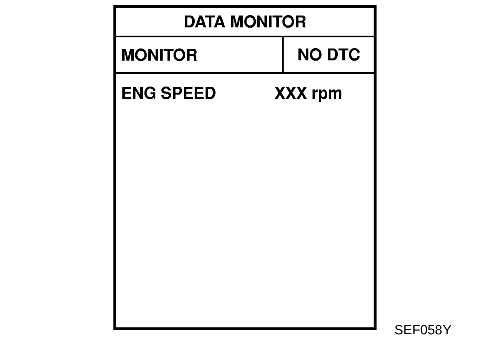

SEF058Y

WITH GST

Follow the procedure “WITH CONSULT-II” above.

Diagnostic Procedure

ABS00CUU

1. CHECK ELECTRIC THROTTLE CONTROL ACTUATOR VISUALLY

1. Turn ignition switch OFF.
2. Remove the intake air duct.
3. Check if foreign matter is caught between the throttle valve and the housing.

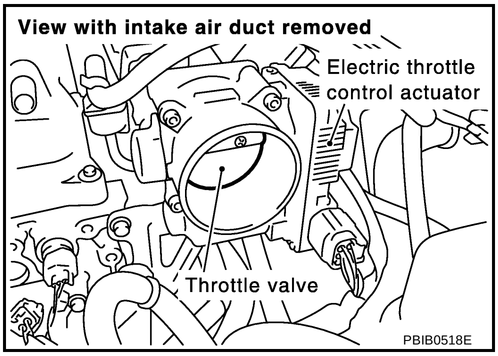

OK or NG

OK >> GO TO 2.

NG >> Remove the foreign matter and clean the electric throttle control actuator inside.

2. REPLACE ELECTRIC THROTTLE CONTROL ACTUATOR

1. Replace the electric throttle control actuator.
2. Perform EC-88, "Throttle Valve Closed Position Learning" .
3. Perform EC-88, "Idle Air Volume Learning" .

>> **INSPECTION END**

Remove and Installation

ABS00CUV

ELECTRIC THROTTLE CONTROL ACTUATOR

Refer to EM-16, "INTAKE MANIFOLD" .

DTC P1229 SENSOR POWER SUPPLY

PFP:16119

On Board Diagnosis Logic

ABS00CUW

This self-diagnosis has the one trip detection logic.

DTC No.	Trouble diagnosis name	DTC detecting condition	Possible cause
P1229 1229	Sensor power supply circuit short	ECM detects a voltage of power source for sensor is excessively low or high.	● Harness or connectors (The APP sensor 1 circuit is shorted.) (The PSP sensor circuit is shorted.) (The refrigerant pressure sensor circuit is shorted.) (The EVAP control system pressure sensor circuit is shorted.) ● Accelerator pedal position sensor (APP sensor 1) ● Power steering pressure sensor ● Refrigerant pressure sensor ● EVAP control system pressure sensor

FAIL-SAFE MODE

When the malfunction is detected, the ECM enters fail-safe mode and the MIL lights up.

Engine operation condition in fail-safe mode
ECM stops the electric throttle control actuator control, throttle valve is maintained at a fixed opening (approx. 5 degrees) by the return spring.

DTC Confirmation Procedure

ABS00CUX

NOTE:

If DTC Confirmation Procedure has been previously conducted, always turn ignition switch OFF and wait at least 10 seconds before conducting the next test.

TESTING CONDITION:

Before performing the following procedure, confirm that battery voltage is more than 10V at idle.

WITH CONSULT-II

1. Turn ignition switch ON.
2. Select “DATA MONITOR” mode with CONSULT-II.
3. Start engine and let it idle for 1 second.
4. If DTC is detected, go to EC-501, "Diagnostic Procedure" .

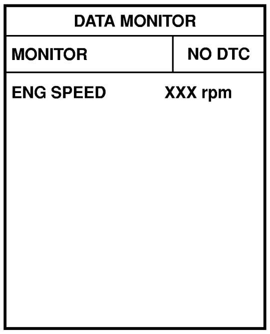

SEF058Y

WITH GST

Follow the procedure “WITH CONSULT-II” above.

Wiring Diagram

ABS00CUY

EC-SEN/PW-01

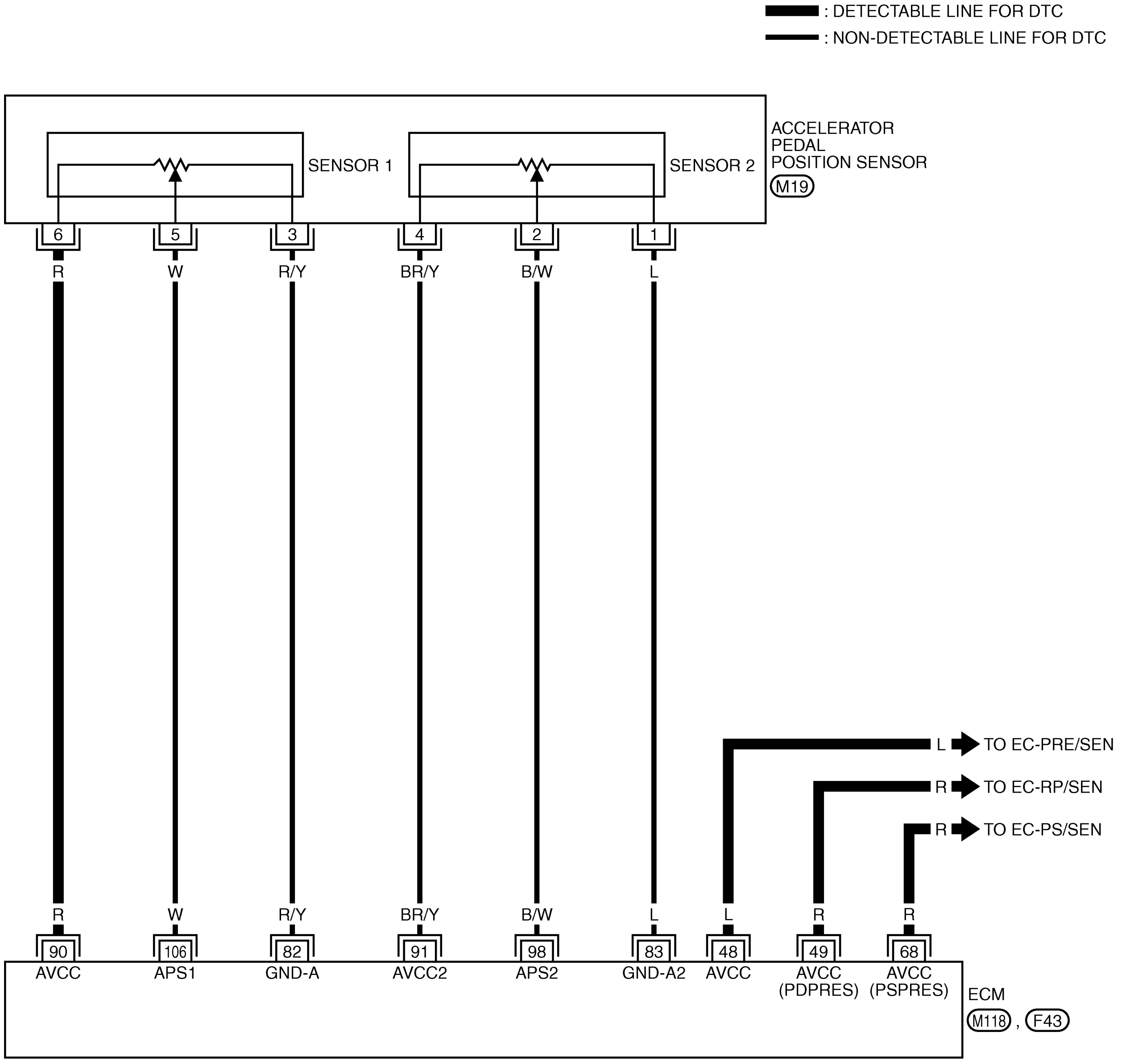

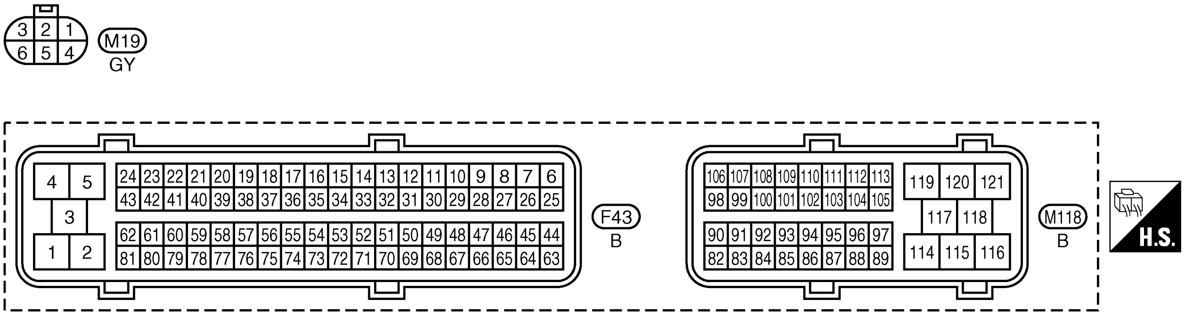

TBWB0129E

Specification data are reference values and are measured between each terminal and ground.

CAUTION:

Do not use ECM ground terminals when measuring input/output voltage. Doing so may result in damage to the ECM's transistor. Use a ground other than ECM terminals, such as the ground.

TERMINAL NO.	WIRE COLOR	ITEM	CONDITION	DATA (DC Voltage)
48	L	Sensor power supply (EVAP control system pressure sensor)	**[Ignition switch: ON]**	Approximately 5V
49	R	Sensor power supply (Refrigerant pressure sensor)	**[Ignition switch: ON]**	Approximately 5V
68	R	Sensor power supply (Power steering pressure sensor)	**[Ignition switch: ON]**	Approximately 5V
90	R	Sensor power supply (Accelerator pedal position sensor 1)	**[Ignition switch: ON]**	Approximately 5V

Diagnostic Procedure

ABS00CUZ

1. CHECK GROUND CONNECTIONS

1. Turn ignition switch OFF.
2. Loosen and retighten three ground screws on the body. Refer to EC-161, "Ground Inspection" .

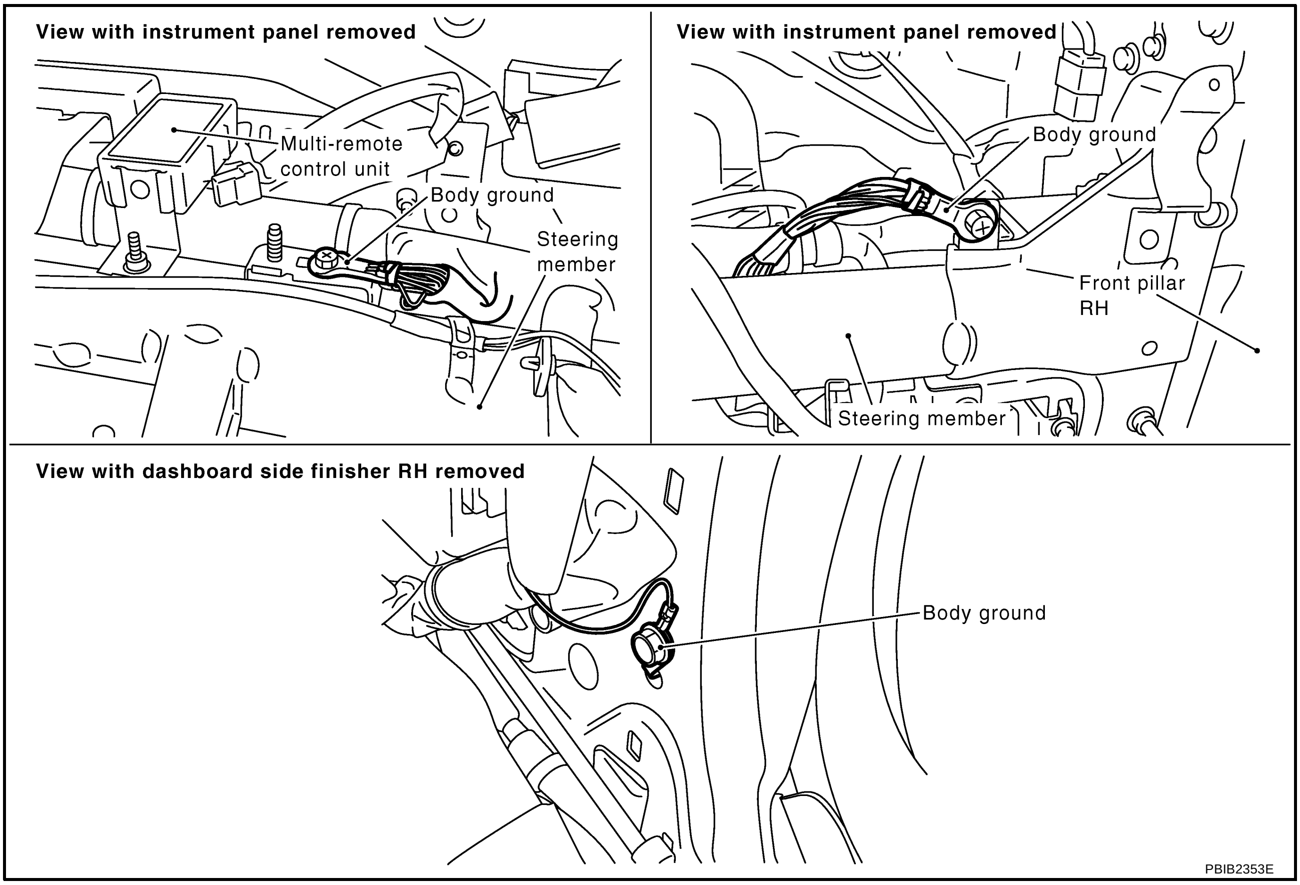

OK or NG

OK >> GO TO 2.
NG >> Repair or replace ground connections.

2. CHECK ACCELERATOR PEDAL POSITION SENSOR 1 POWER SUPPLY CIRCUIT

1. Disconnect accelerator pedal position (APP) sensor harness connector.
2. Turn ignition switch ON.

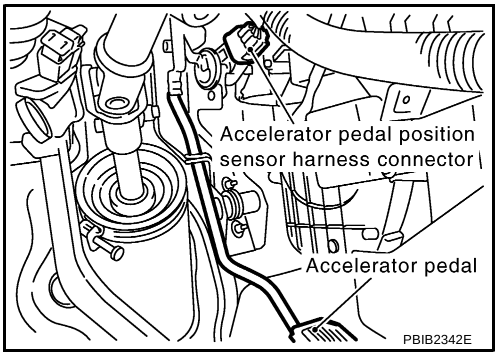

3. Check voltage between APP sensor terminal 2 and ground with CONSULT-II or tester.

Voltage: Approximately 5V

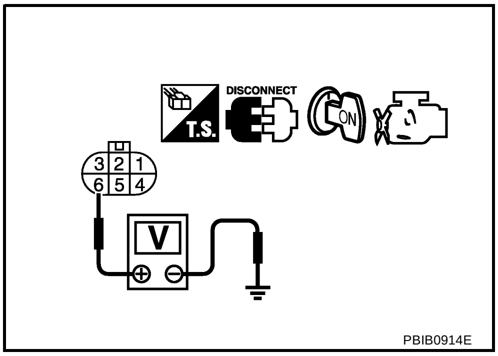

OK or NG

OK >> GO TO 5.
NG >> GO TO 3.

3. CHECK SENSOR POWER SUPPLY CIRCUITS

Check the following.

- Harness for short to power and short to ground, between the following terminals.

ECM terminal	Sensor terminal	Reference Wiring Diagram
48	EVAP control system pressure sensor terminal 3	EC-367
49	Refrigerant pressure sensor terminal 3	EC-620
68	PSP sensor terminal 3	EC-412
90	APP sensor terminal 6	EC-557

OK or NG

OK >> GO TO 4.
NG >> Repair short to ground or short to power in harness or connectors.

4. CHECK COMPONENTS

Check the following.

- Refrigerant pressure sensor (Refer to ATC-77, "COMPONENT INSPECTION" (with auto A/C models), MTC-52, "ELECTRICAL COMPONENT INSPECTION" (with manual A/C models).)
- Power steering pressure sensor (Refer to EC-415, "Component Inspection" .)
- EVAP control system pressure sensor (Refer to EC-364, "Component Inspection" .)

OK or NG

OK >> GO TO 7.
NG >> Replace malfunctioning component.

5. CHECK APP SENSOR

Refer to EC-561 .

OK or NG

OK >> GO TO 7.
NG >> GO TO 6.

6. REPLACE ACCELERATOR PEDAL ASSEMBLY

1. Replace accelerator pedal assembly.
2. Perform EC-88, "Accelerator Pedal Released Position Learning" .
3. Perform EC-88, "Throttle Valve Closed Position Learning" .
4. Perform EC-88, "Idle Air Volume Learning" .

>> **INSPECTION END**

7. CHECK INTERMITTENT INCIDENT

Refer to EC-153, "TROUBLE DIAGNOSIS FOR INTERMITTENT INCIDENT" .

>> **INSPECTION END**

DTC P1444 EVAP CANISTER PURGE VOLUME CONTROL SOLENOID VALVE

PFP:14920

Description

ABS00CWE

SYSTEM DESCRIPTION

Sensor	Input Signal to ECM	ECM function	Actuator
Crankshaft position sensor (POS) Camshaft position sensor (PHASE)	Engine speed*1	EVAP canister purge flow control	EVAP canister purge volume control solenoid valve
Mass air flow sensor	Amount of intake air		
Engine coolant temperature sensor	Engine coolant temperature		
Battery	Battery voltage*1		
Throttle position sensor	Throttle position		
Accelerator pedal position sensor	Accelerator pedal position		
Heated oxygen sensor 1	Density of oxygen in exhaust gas (Mixture ratio feedback signal)		
Fuel tank temperature sensor	Fuel temperature in fuel tank		
Wheel sensor	Vehicle speed*2		

*1: ECM determines the start signal status by the signals of engine speed and battery voltage.

*2: This signal is sent to the ECM though CAN communication line.

This system controls flow rate of fuel vapor from the EVAP canister. The opening of the vapor by-pass passage in the EVAP canister purge volume control solenoid valve changes to control the flow rate. The EVAP canister purge volume control solenoid valve repeats ON/OFF operation according to the signal sent from the ECM. The opening of the valve varies for optimum engine control. The optimum value stored in the ECM is determined by considering various engine conditions. When the engine is operating, the flow rate of fuel vapor from the EVAP canister is regulated as the air flow changes.

COMPONENT DESCRIPTION

The EVAP canister purge volume control solenoid valve uses a ON/OFF duty to control the flow rate of fuel vapor from the EVAP canister. The EVAP canister purge volume control solenoid valve is moved by ON/OFF pulses from the ECM. The longer the ON pulse, the greater the amount of fuel vapor that will flow through the valve.

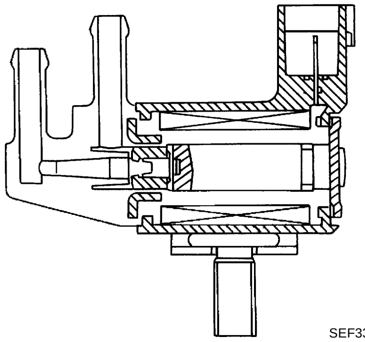

SEF337U

CONSULT-II Reference Value in Data Monitor Mode

ABS00CWF

Specification data are reference values.

MONITOR ITEM	CONDITION		SPECIFICATION
PURG VOL C/V	● Engine: After warming up ● Shift lever: P or N (A/T), Neutral (M/T) ● Air conditioner switch: OFF ● No-load	Idle	0%
		2,000 rpm	20 - 30%

On Board Diagnosis Logic

ABS00CWG

DTC No.	Trouble diagnosis name	DTC detecting condition	Possible cause
P1444 1444	EVAP canister purge volume control solenoid valve	The canister purge flow is detected during the specified driving conditions, even when EVAP canister purge volume control solenoid valve is completely closed.	● EVAP control system pressure sensor ● EVAP canister purge volume control solenoid valve (The valve is stuck open.) ● EVAP canister vent control valve ● EVAP canister ● Hoses (Hoses are connected incorrectly or clogged.)

DTC Confirmation Procedure

ABS00CWH

NOTE:
If DTC Confirmation Procedure has been previously conducted, always turn ignition switch OFF and wait at least 10 seconds before conducting the next test.
TESTING CONDITION:
Always perform test at a temperature of 5°C (41°F) or more.

WITH CONSULT-II

1. Start engine and warm it up to normal operating temperature.
2. Turn ignition switch OFF and wait at least 10 seconds.
3. Turn ignition switch ON.
4. Select “PURG VOL CN/V P1444” of “EVAPORATIVE SYSTEM” in “DTC WORK SUPPORT” mode with CONSULT-II.
5. Touch “START”.

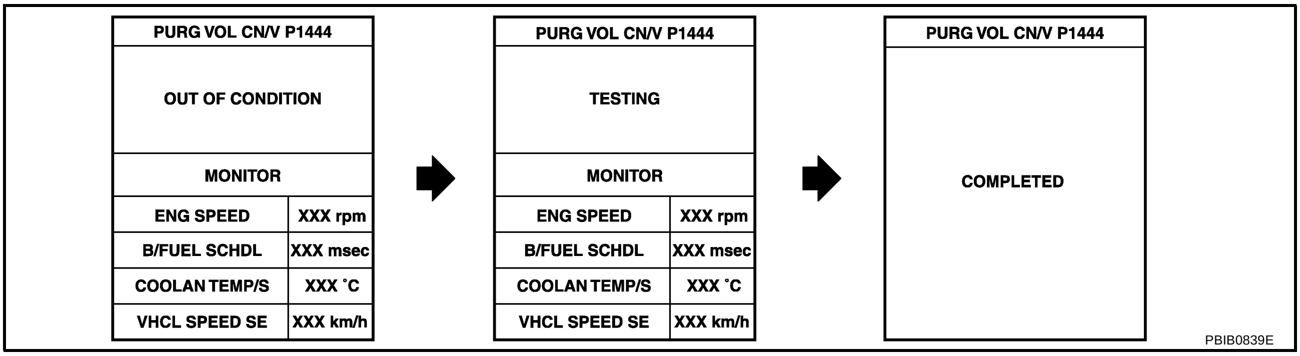

6. Start engine and let it idle until “TESTING” on CONSULT-II changes to “COMPLETED”.
(It will take approximately 10 seconds.)
If “TESTING” is not displayed after 5 minutes, retry from step 2.
7. Make sure that “OK” is displayed after touching “SELF-DIAG RESULTS”. If “NG” is displayed, refer to EC-508, "Diagnostic Procedure" .

WITH GST

1. Start engine and warm it up to normal operating temperature.
2. Turn ignition switch OFF and wait at least 10 seconds.
3. Start engine and let it idle for at least 20 seconds.
4. Select “Service 07” with GST.
5. If 1st trip DTC is detected, go to EC-508, "Diagnostic Procedure" .

Wiring Diagram

ABS00CWI

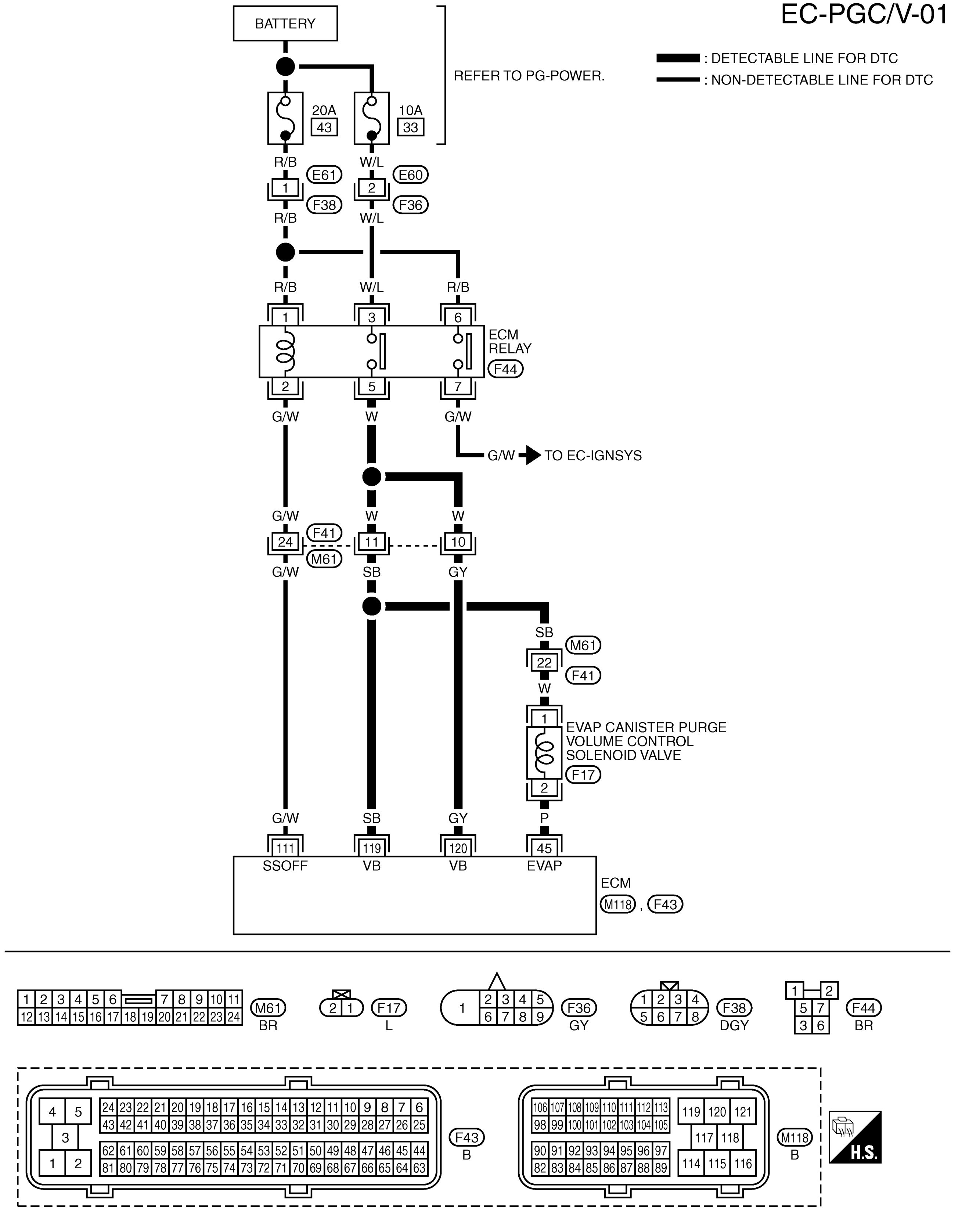

TBWB0123E

Specification data are reference values and are measured between each terminal and ground.
Pulse signal is measured by CONSULT-II.

CAUTION:

Do not use ECM ground terminals when measuring input/output voltage. Doing so may result in damage to the ECM's transistor. Use a ground other than ECM terminals, such as the ground.

TERMINAL NO.	WIRE COLOR	ITEM	CONDITION	DATA (DC Voltage)
45	P	EVAP canister purge volume control solenoid valve	**[Engine is running]** ● Idle speed	BATTERY VOLTAGE (11 - 14V)★ 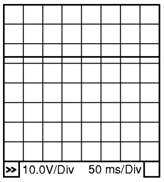 PBIB0050E
			[Engine is running] ● Engine speed is about 2,000 rpm (More than 100 seconds after starting engine)	Approximately 10V★ 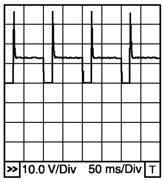 PBIB0520E
111	G/W	ECM relay (Self shut-off)	**[Engine is running]** **[Ignition switch: OFF]** ● A few seconds after turning ignition switch OFF	0 - 1.0V
			[Ignition switch: OFF] ● More than a few seconds after turning ignition switch OFF	BATTERY VOLTAGE (11 - 14V)
119 120	SB GY	Power supply for ECM	**[Ignition switch: ON]**	BATTERY VOLTAGE (11 - 14V)

★: Average voltage for pulse signal (Actual pulse signal can be confirmed by oscilloscope.)

Diagnostic Procedure

ABS00CWJ

1. CHECK EVAP CANISTER PURGE VOLUME CONTROL SOLENOID VALVE POWER SUPPLY CIRCUIT

1. Turn ignition switch OFF.
2. Disconnect EVAP canister purge volume control solenoid valve harness connector.
3. Turn ignition switch ON.

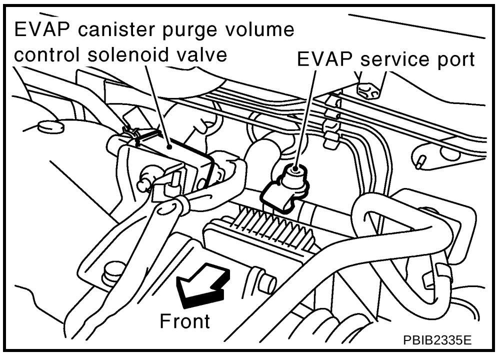

PBIB2335E

4. Check voltage between EVAP canister purge volume control solenoid valve terminal 1 and ground with CONSULT-II or tester.

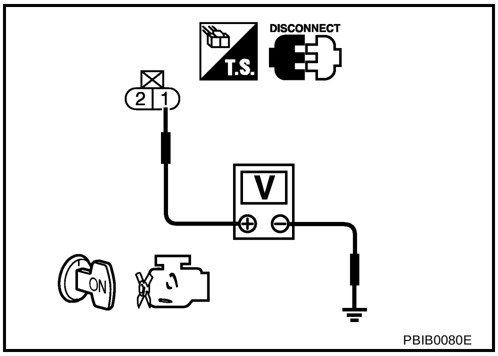

PBIB0080E

Voltage: Battery voltage

OK or NG

OK >> GO TO 3.
NG >> GO TO 2.

2. DETECT MALFUNCTIONING PART

Check the following.

- Harness connectors M61, F41
- Harness for open or short between EVAP canister purge volume control solenoid valve and ECM relay

>> Repair open circuit or short to ground or short to power in harness or connectors.

3. CHECK EVAP CANISTER PURGE VOLUME CONTROL SOLENOID VALVE OUTPUT SIGNAL CIRCUIT FOR OPEN AND SHORT

1. Turn ignition switch OFF.
2. Disconnect ECM harness connector.
3. Check harness continuity between ECM terminal 45 and EVAP canister purge volume control solenoid valve terminal 2. Refer to Wiring Diagram.

Continuity should exist.

4. Also check harness for short to ground and short to power.

OK or NG

OK >> GO TO 4.
NG >> Repair open circuit or short to ground or short to power in harness or connectors.

4. CHECK EVAP CONTROL SYSTEM PRESSURE SENSOR CONNECTOR

1. Disconnect EVAP control system pressure sensor harness connector.
2. Check connectors for water.

Water should not exist.

OK or NG

OK >> GO TO 5.
NG >> Replace EVAP control system pressure sensor.

5. CHECK EVAP CONTROL SYSTEM PRESSURE SENSOR

Refer to EC-371, "Component Inspection" .

OK or NG

OK (With CONSULT-II)>>GO TO 6.
OK (Without CONSULT-II)>>GO TO 7.
NG >> Replace EVAP control system pressure sensor.

6. CHECK EVAP CANISTER PURGE VOLUME CONTROL SOLENOID VALVE

With CONSULT-II

1. Turn ignition switch OFF.
2. Reconnect harness connectors disconnected.
3. Start engine.
4. Perform “PURG VOL CONT/V” in “ACTIVE TEST” mode with CONSULT-II. Check that engine speed varies according to the valve opening.

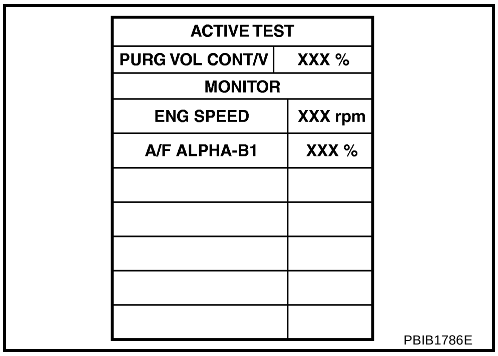

OK or NG

OK >> GO TO 8.
NG >> GO TO 7.

7. CHECK EVAP CANISTER PURGE VOLUME CONTROL SOLENOID VALVE

Refer to EC-353, "Component Inspection" .

OK or NG

OK >> GO TO 8.
NG >> Replace EVAP canister purge volume control solenoid valve.

8. CHECK RUBBER TUBE FOR CLOGGING

1. Disconnect rubber tube connected to EVAP canister vent control valve.
2. Check the rubber tube for clogging.

OK or NG

OK >> GO TO 9.
NG >> Clean the rubber tube using an air blower.

9. CHECK EVAP CANISTER VENT CONTROL VALVE

Refer to EC-360, "Component Inspection" .

OK or NG

OK >> GO TO 10.
NG >> Replace EVAP canister vent control valve.

10. CHECK IF EVAP CANISTER SATURATED WITH WATER

1. Remove EVAP canister with EVAP canister vent control valve and EVAP control system pressure attached.
2. Check if water will drain from the EVAP canister.

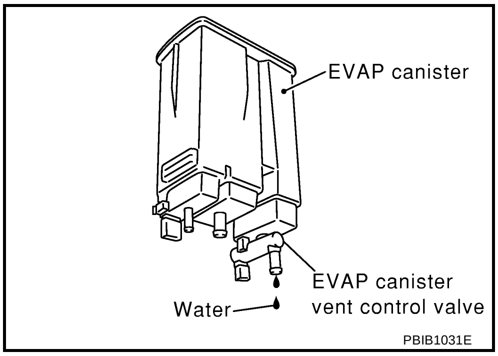

PBIB1031E

YES or NO

YES >> GO TO 11.
NO >> GO TO 13.

11. CHECK EVAP CANISTER

Weigh the EVAP canister with the EVAP canister vent control valve and EVAP control system pressure attached.

The weight should be less than 2.5 kg (5.5 lb).

OK or NG

OK >> GO TO 13.
NG >> GO TO 12.

12. DETECT MALFUNCTIONING PART

Check the following.

- EVAP canister for damage
- EVAP hose between EVAP canister and water separator for clogging or poor connection

>> Repair hose or replace EVAP canister.

13. CHECK INTERMITTENT INCIDENT

Refer to EC-153, "TROUBLE DIAGNOSIS FOR INTERMITTENT INCIDENT" .

>> **INSPECTION END**

Component Inspection

ABS00CWK

EVAP CANISTER PURGE VOLUME CONTROL SOLENOID VALVE

With CONSULT-II

Check air passage continuity of EVAP canister purge volume control solenoid valve under the following conditions.

Condition (PURG VOL CONT/V value)	Air passage continuity between A and B
100%	Yes
0%	No

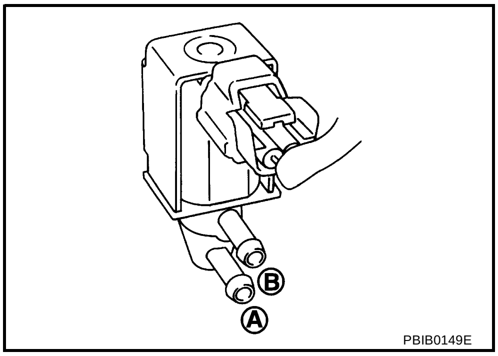

PBIB0149E

Without CONSULT-II

Check air passage continuity of EVAP canister purge volume control solenoid valve under the following conditions.

Condition	Air passage continuity between A and B
12V direct current supply between terminals 1 and 2	Yes
No supply	No

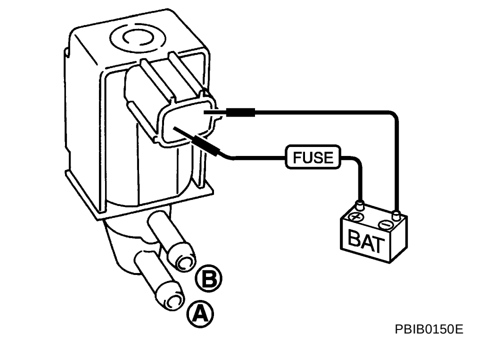

PBIB0150E

Removal and Installation

ABS00CWL

EVAP CANISTER PURGE VOLUME CONTROL SOLENOID VALVE

Refer to EM-16, "INTAKE MANIFOLD"

DTC P1446 EVAP CANISTER VENT CONTROL VALVE

PFP:14935

Component Description

ABS00CWM

The EVAP canister vent control valve is located on the EVAP canister and is used to seal the canister vent.
This solenoid valve responds to signals from the ECM. When the ECM sends an ON signal, the coil in the solenoid valve is energized. A plunger will then move to seal the canister vent. The ability to seal the vent is necessary for the on board diagnosis of other evaporative emission control system components.
This solenoid valve is used only for diagnosis, and usually remains opened.
When the vent is closed, under normal purge conditions, the evaporative emission control system is depressurized and allows "EVAP Control System" diagnoses.

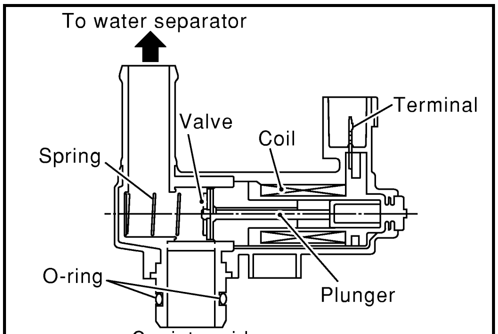

SEF381Z

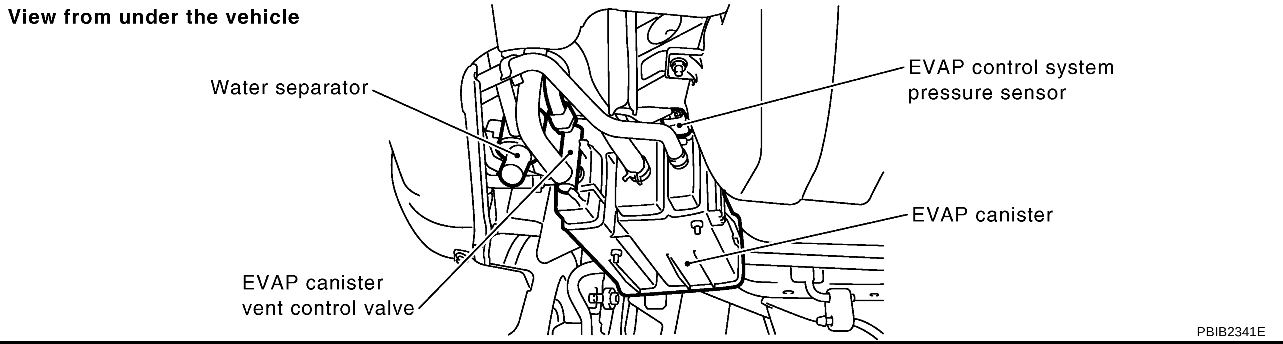

PBIB2341E

CONSULT-II Reference Value in Data Monitor Mode

ABS00CWN

Specification data are reference values.

MONITOR ITEM	CONDITION	SPECIFICATION
VENT CONT/V	● Ignition switch: ON	OFF

On Board Diagnosis Logic

ABS00CWO

DTC No.	Trouble diagnosis name	DTC detecting condition	Possible cause
P1446 1446	EVAP canister vent control valve close	EVAP canister vent control valve remains closed under specified driving conditions.	● EVAP canister vent control valve ● EVAP control system pressure sensor and the circuit ● Blocked rubber tube to EVAP canister vent control valve ● Water separator ● EVAP canister is saturated with water

DTC Confirmation Procedure

ABS00CWP

CAUTION:

Always drive vehicle at a safe speed.

NOTE:

If DTC Confirmation Procedure has been previously conducted, always turn ignition switch OFF and wait at least 10 seconds before conducting the next test.

WITH CONSULT-II

1. Turn ignition switch ON and wait at least 5 seconds.
2. Turn ignition switch OFF and wait at least 10 seconds.
3. Turn ignition switch ON and select “DATA MONITOR” mode with CONSULT-II.
4. Start engine and let it idle for at least 1 minute.
5. Repeat next procedures 3 times.
   a. Increase the engine speed up to 3,000 to 3,500 rpm and keep it for 2 minutes and 50 seconds to 3 minutes.
   Never exceed 3 minutes.
   b. Fully released accelerator pedal and keep engine idle for about 5 seconds.
6. If 1st trip DTC is detected, go to EC-515, "Diagnostic Procedure" .
   If 1st trip DTC is not detected, go to the next step.

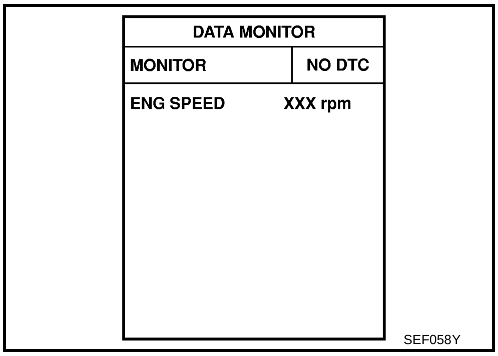

7. Repeat next procedure 20 times.
   a. Quickly increase the engine speed up to 4,000 to 4,500 rpm or more and keep it for 25 to 30 seconds.
   b. Fully released accelerator pedal and keep engine idle for at least 35 seconds.

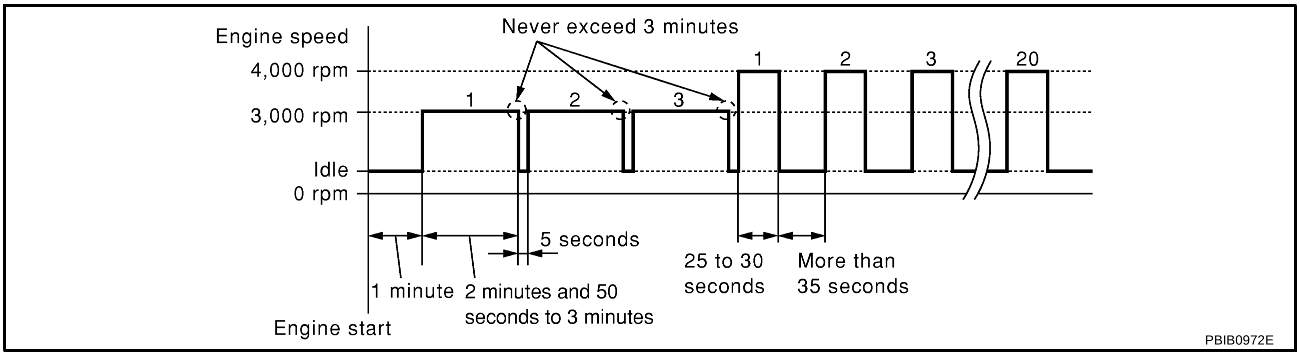

8. If 1st trip DTC is detected, go to EC-515, "Diagnostic Procedure" .

WITH GST

Follow the procedure “WITH CONSULT-II” above.

Wiring Diagram

ABS00CWQ

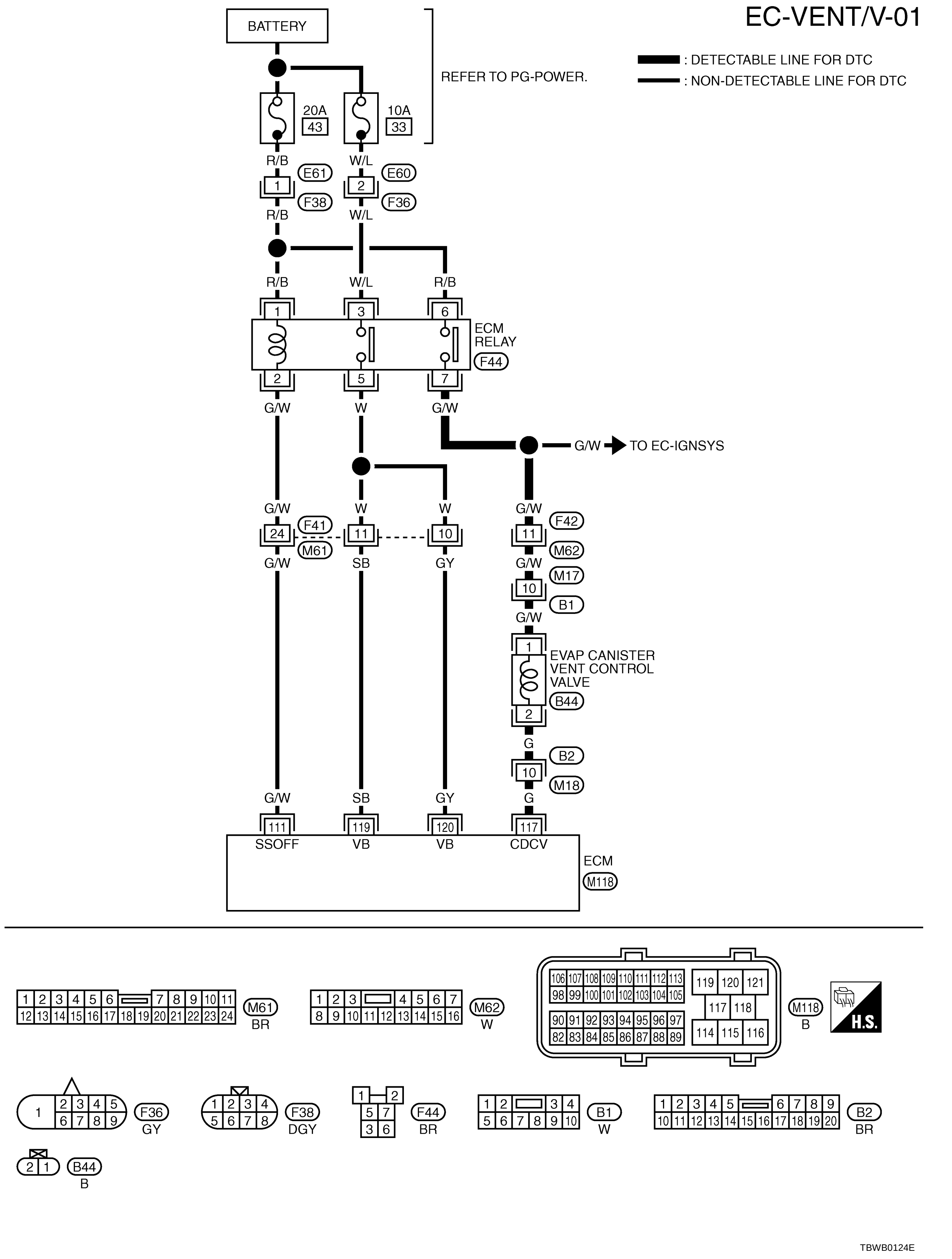

Specification data are reference values and are measured between each terminal and ground.

CAUTION:

Do not use ECM ground terminals when measuring input/output voltage. Doing so may result in damage to the ECM's transistor. Use a ground other than ECM terminals, such as the ground.

TERMINAL NO.	WIRE COLOR	ITEM	CONDITION	DATA (DC Voltage)
111	G/W	ECM relay (Self shut-off)	**[Engine is running]** **[Ignition switch: OFF]** ● A few seconds after turning ignition switch OFF	0 - 1.0V
			[Ignition switch: OFF] ● More than a few seconds after turning ignition switch OFF	BATTERY VOLTAGE (11 - 14V)
117	G	EVAP canister vent control valve	**[Ignition switch: ON]**	BATTERY VOLTAGE (11 - 14V)
119 120	SB GY	Power supply for ECM	**[Ignition switch: ON]**	BATTERY VOLTAGE (11 - 14V)

Diagnostic Procedure

ABS00CWR

1. CHECK RUBBER TUBE

1. Turn ignition switch OFF.
2. Disconnect rubber tube connected to EVAP canister vent control valve.
3. Check the rubber tube for clogging.

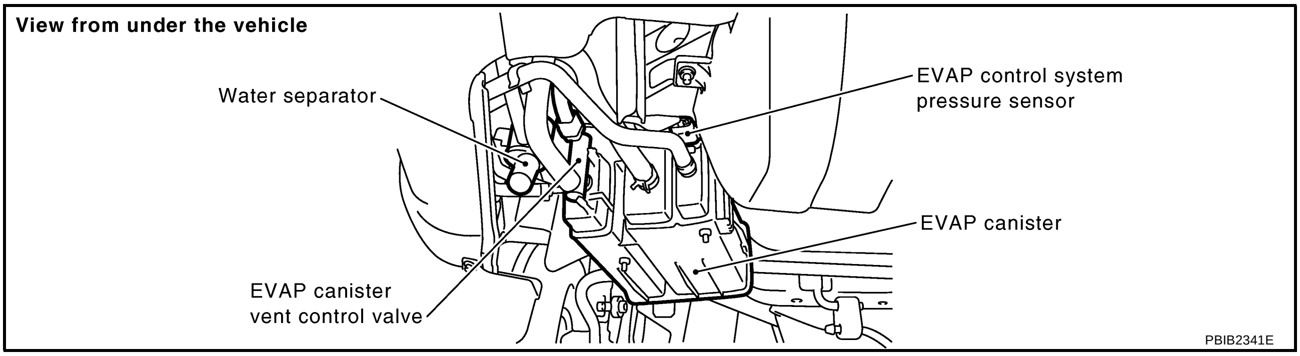

OK or NG

OK >> GO TO 2.
NG >> Clean rubber tube using an air blower.

2. CHECK WATER SEPARATOR

Refer to EC-517, "Component Inspection" .

OK or NG

OK >> GO TO 3.
NG >> Replace water separator.

3. CHECK EVAP CANISTER VENT CONTROL VALVE

Refer to EC-517, "EVAP CANISTER VENT CONTROL VALVE" .

OK or NG

OK >> GO TO 4.
NG >> Replace EVAP canister vent control valve.

4. CHECK IF EVAP CANISTER SATURATED WITH WATER

1. Remove EVAP canister with EVAP canister vent control valve and EVAP control system pressure sensor attached.
2. Check if water will drain from the EVAP canister.

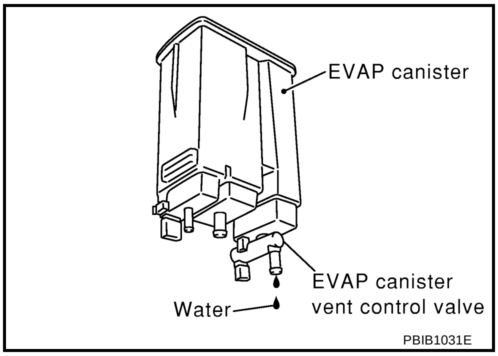

Yes or No

Yes >> GO TO 5.
No >> GO TO 7.

5. CHECK EVAP CANISTER

Weigh the EVAP canister with the EVAP canister vent control valve and EVAP control system pressure sensor attached.
The weight should be less than 2.5 kg (5.5 lb).

OK or NG

OK >> GO TO 7.
NG >> GO TO 6.

6. DETECT MALFUNCTIONING PART

Check the following.

- EVAP canister for damage
- EVAP hose between EVAP canister and water separator for clogging or poor connection

>> Repair hose or replace EVAP canister.

7. CHECK EVAP CONTROL SYSTEM PRESSURE SENSOR CONNECTOR

1. Disconnect EVAP control system pressure sensor harness connector.
2. Check connectors for water.

Water should not exist.

OK or NG

OK >> GO TO 8.
NG >> Replace EVAP control system pressure sensor.

8. CHECK EVAP CONTROL SYSTEM PRESSURE SENSOR

Refer to EC-379, "Component Inspection" .

OK or NG

OK >> GO TO 9.
NG >> Replace EVAP control system pressure sensor.

9. CHECK INTERMITTENT INCIDENT

Refer to EC-153, "TROUBLE DIAGNOSIS FOR INTERMITTENT INCIDENT" .

>> **INSPECTION END**

Component Inspection

ABS00CWS

EVAP CANISTER VENT CONTROL VALVE

With CONSULT-II

1. Remove EVAP canister vent control valve from EVAP canister.
2. Check portion **B** of EVAP canister vent control valve for being rusted.
   If NG, replace EVAP canister vent control valve.
   If OK, go to next step.
3. Reconnect harness connectors disconnected.
4. Turn ignition switch ON.

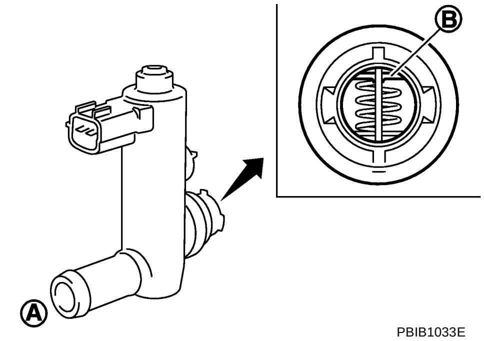

PBIB1033E

5. Perform “VENT CONTROL/V” in “ACTIVE TEST” mode.
6. Check air passage continuity and operation delay time.

Condition VENT CONTROL/V	Air passage continuity between A and B
ON	No
OFF	Yes

Operation takes less than 1 second.
Make sure new O-ring is installed properly.
If NG, replace EVAP canister vent control valve.
If OK, go to next step.

ACTIVE TEST	
VENT CONTROL/V	OFF
MONITOR	
ENG SPEED	XXX rpm
A/F ALPHA-B1	XXX %

PBIB1787E

7. Clean the air passage (Portion **A** to **B**) of EVAP canister vent control valve using an air blower.
8. Perform step 5 again.

Without CONSULT-II

1. Remove EVAP canister vent control valve from EVAP canister.
2. Check portion **B** of EVAP canister vent control valve for being rusted.

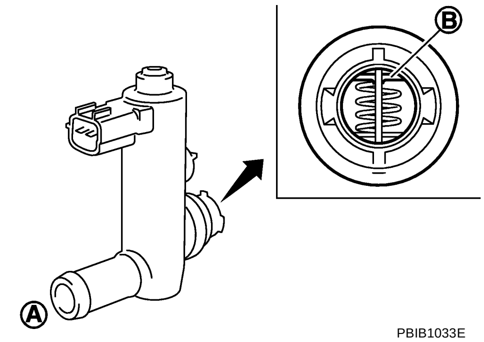

PBIB1033E

3. Check air passage continuity and operation delay time under the following conditions.

Condition	Air passage continuity between A and B
12V direct current supply between terminals 1 and 2	No
OFF	Yes

Operation takes less than 1 second.
Make sure new O-ring is installed properly.
If NG, replace EVAP canister vent control valve.
If OK, go to next step.

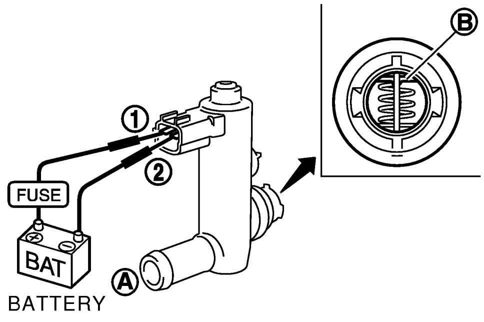

PBIB1034E

4. Clean the air passage (Portion **A** to **B**) of EVAP canister vent control valve using an air blower.

5. Perform step 3 again.

WATER SEPARATOR

1. Check visually for insect nests in the water separator air inlet.
2. Check visually for cracks or flaws in the appearance.
3. Check visually for cracks or flaws in the hose.
4. Check that **A** and **C** are not clogged by blowing air into **B** with **A** , and then **C** plugged.
5. In case of NG in items 2 - 4, replace the parts.

   NOTE:
   Do not disassemble water separator.

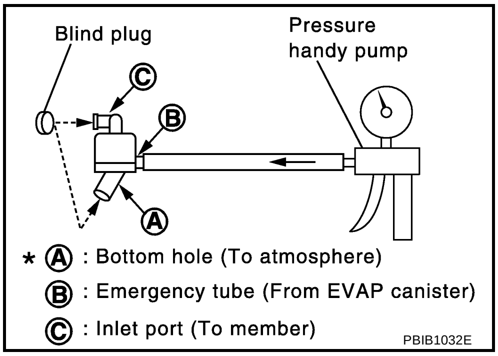

A
EC
C
D
E
F
G
H
I
J
K
L
M

DTC P1564 ASCD STEERING SWITCH

PFP:25551

Component Description

ABS00CWT

ASCD steering switch has variant values of electrical resistance for each button. ECM reads voltage variation of switch, and determines which button is operated.
Refer to EC-27, "AUTOMATIC SPEED CONTROL DEVICE (ASCD)" for the ASCD function.

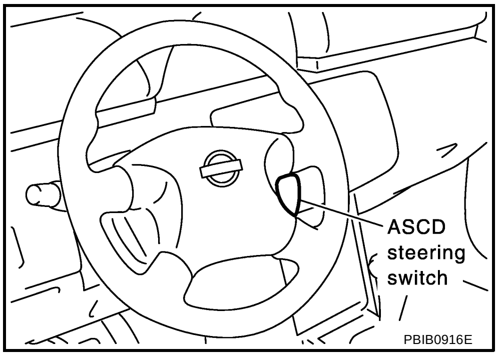

CONSULT-II Reference Value in Data Monitor Mode

ABS00CWU

Specification data are reference values.

MONITOR ITEM	CONDITION		SPECIFICATION
MAIN SW	● Ignition switch: ON	MAIN (CRUISE) switch: Pressed	ON
		MAIN (CRUISE) switch: Released	OFF
CANCEL SW	● Ignition switch: ON	CANCEL switch: Pressed	ON
		CANCEL switch: Released	OFF
RESUME/ACC SW	● Ignition switch: ON	RESUME/ACCEL switch: Pressed	ON
		RESUME/ACCEL switch: Released	OFF
SET SW	● Ignition switch: ON	SET/COAST switch: Pressed	ON
		SET/COAST switch: Released	OFF

On Board Diagnosis Logic

ABS00CWV

This self-diagnosis has the one trip detection logic.
The MIL will not light up for this diagnosis.

NOTE:
If DTC P1564 is displayed with DTC P0605, first perform the trouble diagnosis for DTC P0605.
Refer to EC-416 .

DTC No.	Trouble Diagnosis Name	DTC Detecting Condition	Possible Cause
P1564 1564	ASCD steering switch	● An excessively high voltage signal from the ASCD steering switch is sent to ECM. ● ECM detects that input signal from the ASCD steering switch is out of the specified range. ● ECM detects that the ASCD steering switch is stuck ON.	● Harness or connectors (The switch circuit is open or shorted.) ● ASCD steering switch ● ECM

DTC Confirmation Procedure

ABS00CWW

NOTE:
If DTC Confirmation Procedure has been previously conducted, always turn ignition switch OFF and wait at least 10 seconds before conducting the next test.

WITH CONSULT-II

1. Turn ignition switch ON.
2. Select “DATA MONITOR” mode with CONSULT-II.
3. Wait at least 10 seconds.
4. Press MAIN (CRUISE) switch for at least 10 seconds, then release it and wait at least 10 seconds.
5. Press CANCEL switch for at least 10 seconds, then release it and wait at least 10 seconds.

6. Press RESUME/ACCEL switch for at least 10 seconds, then release it and wait at least 10 seconds.
7. Press SET/COAST switch for at least 10 seconds, then release it and wait at least 10 seconds.
8. If DTC is detected, go to EC-523, "Diagnostic Procedure" .

WITH GST

Follow the procedure “WITH CONSULT-II” above.

Wiring Diagram

ABS00CWX

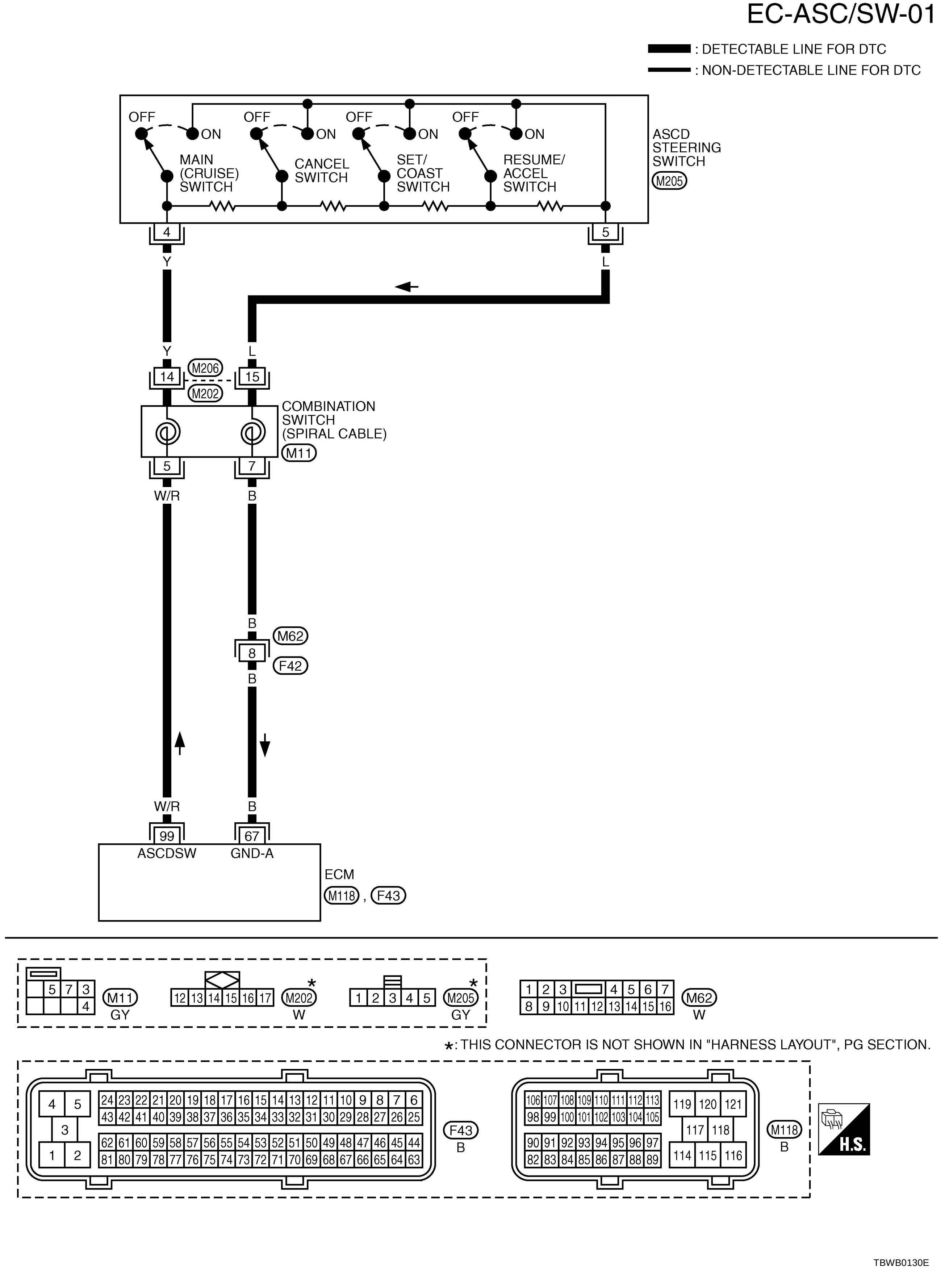

Specification data are reference values and are measured between each terminal and ground.

CAUTION:

Do not use ECM ground terminals when measuring input/output voltage. Doing so may result in damage to the ECM's transistor. Use a ground other than ECM terminals, such as the ground.

TERMINAL NO.	WIRE COLOR	ITEM	CONDITION	DATA (DC Voltage)
67	B	Sensor ground	**[Engine is running]** ● **Warm-up condition** ● Idle speed	Approximately 0V
99	W/R	ASCD steering switch	**[Ignition switch: ON]** ● ASCD steering switch: OFF	Approximately 4V
			[Ignition switch: ON] ● MAIN (CRUISE) switch: Pressed	Approximately 0V
			[Ignition switch: ON] ● CANCEL switch: Pressed	Approximately 1V
			[Ignition switch: ON] ● RESUME/ACCEL switch: Pressed	Approximately 3V
			[Ignition switch: ON] ● SET/COAST switch: Pressed	Approximately 2V

Diagnostic Procedure

ABS00CWY

1. CHECK GROUND CONNECTIONS

1. Turn ignition switch OFF.
2. Loosen and retighten three ground screws on the body.
   Refer to EC-161, "Ground Inspection" .

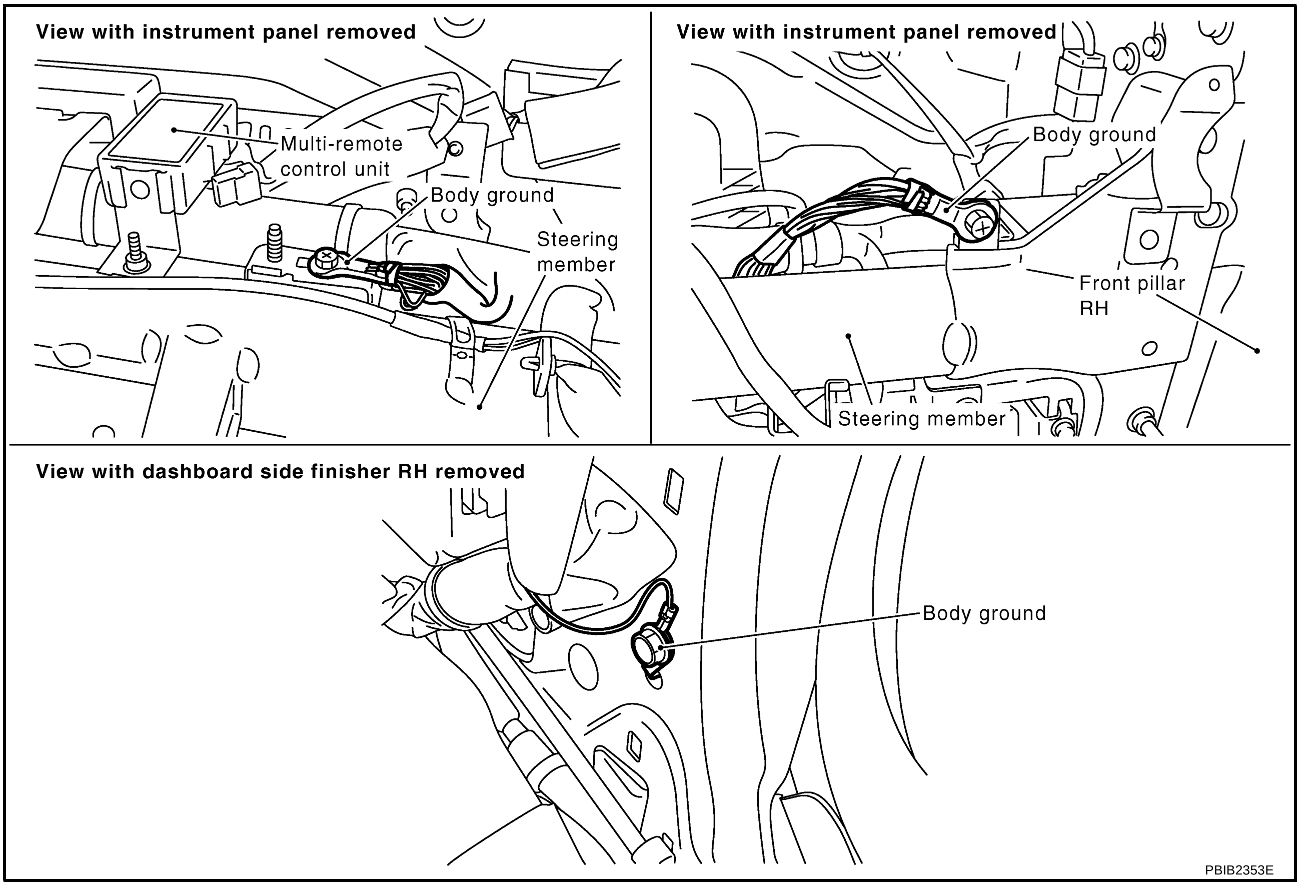

OK or NG

OK >> GO TO 2.
NG >> Repair or replace ground connections.

2. CHECK ASCD STEERING SWITCH CIRCUIT

With CONSULT-II

1. Turn ignition switch ON.
2. Select “MAIN SW”, “RESUME/ACC SW”, “SET SW and “CANCEL SW” in “DATA MONITOR” mode with CONSULT-II.
3. Check each item indication under the following conditions.

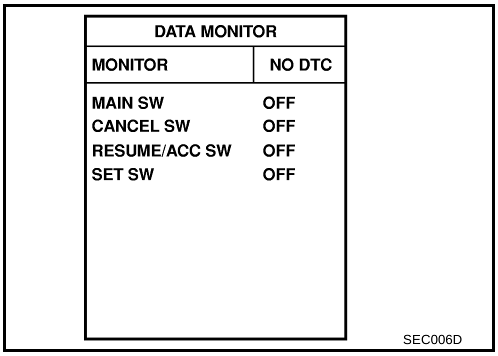

SEC006D

Switch	Monitor item	Condition	Indication
MAIN (CRUISE) switch	MAIN SW	Pressed	ON
		Released	OFF
CANCEL switch	CANCEL SW	Pressed	ON
		Released	OFF
RESUME/ ACCEL switch	RESUME/ACC SW	Pressed	ON
		Released	OFF
SET/COAST switch	SET SW	Pressed	ON
		Released	OFF

Without CONSULT-II

1. Turn ignition switch ON.
2. Check voltage between ECM terminal 99 and ground with pressing each button.

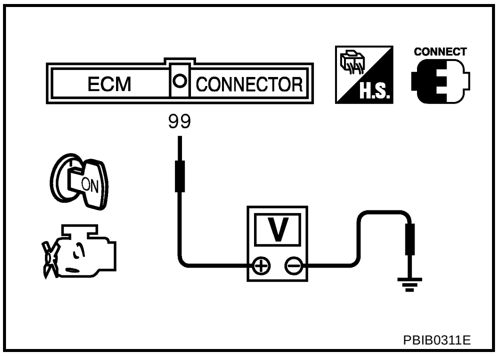

PBIB0311E

Switch	Condition	Voltage [V]
MAIN (CRUISE) switch	Pressed	Approx. 0
	Released	Approx. 4.0
CANCEL switch	Pressed	Approx. 1.0
	Released	Approx. 4.0
RESUME/ACCEL switch	Pressed	Approx. 3.0
	Released	Approx. 4.0
SET/COAST switch	Pressed	Approx. 2.0
	Released	Approx. 4.0

OK or NG

OK >> GO TO 8.
NG >> GO TO 3.

3. CHECK ASCD STEERING SWITCH GROUND CIRCUIT FOR OPEN AND SHORT

1. Turn ignition switch OFF.
2. Disconnect ASCD steering switch harness connector and ECM harness connector.
3. Check harness continuity between ASCD steering switch terminal 5 and ECM terminal 67. Refer to Wiring Diagram.

   Continuity should exist.

4. Also check harness for short to ground and short to power.

OK or NG

OK >> GO TO 5.
NG >> GO TO 4.

A
EC
C
D
E
F
G
H
I
J
K
L
M

4. DETECT MALFUNCTIONING PART

Check the following.

- Harness connectors M62, F42
- Harness connectors M206, M202
- Combination switch (spiral cable)
- Harness for open and short between ECM and ASCD steering switch

>> Repair open circuit or short to ground or short to power in harness or connectors.

5. CHECK ASCD STEERING SWITCH INPUT SIGNAL CIRCUIT FOR OPEN AND SHORT

1. Check harness continuity between ECM terminal 99 and ASCD steering switch terminal 4.
   Refer to Wiring Diagram.

   Continuity should exist.

2. Also check harness for short to ground and short to power.

OK or NG

OK >> GO TO 7.
NG >> GO TO 6.

6. DETECT MALFUNCTIONING PART

Check the following.

- Harness connectors M206, M202
- Combination switch (spiral cable)
- Harness for open and short between ECM and ASCD steering switch

>> Repair open circuit or short to ground or short to power in harness or connectors.

7. CHECK ASCD STEERING SWITCH

Refer to EC-526, "Component Inspection" .

OK or NG

OK >> GO TO 8.
NG >> Replace ASCD steering switch.

8. CHECK INTERMITTENT INCIDENT

Refer to EC-153, "TROUBLE DIAGNOSIS FOR INTERMITTENT INCIDENT" .

>> **INSPECTION END**

Component Inspection

ABS00CWZ

ASCD STEERING SWITCH

1. Disconnect ASCD steering switch.
2. Check continuity between ASCD steering switch terminals 4 and 5 with pushing each switch.

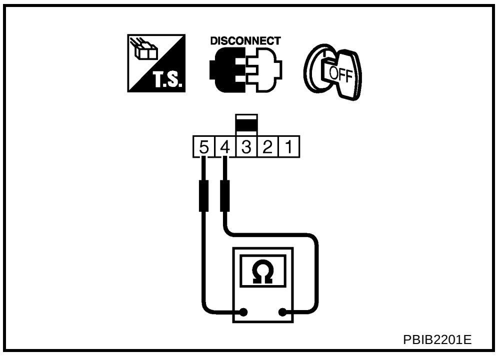

Switch	Condition	Resistance [Ω]
MAIN (CRUISE) switch	Pressed	Approx. 0
	Released	Approx. 4,000
CANCEL switch	Pressed	Approx. 250
	Released	Approx. 4,000
RESUME/ACCEL switch	Pressed	Approx. 1,480
	Released	Approx. 4,000
SET/COAST switch	Pressed	Approx. 660
	Released	Approx. 4,000

If NG, replace ASCD steering switch.

DTC P1572 ASCD BRAKE SWITCH

PFP:25320

Component Description

ABS00CX0

When the brake pedal is depressed, ASCD brake switch is turned OFF and stop lamp switch is turned ON. ECM detects the state of the brake pedal by this input of two kinds (ON/OFF signal).
Refer to EC-27, "AUTOMATIC SPEED CONTROL DEVICE (ASCD)" for the ASCD function.

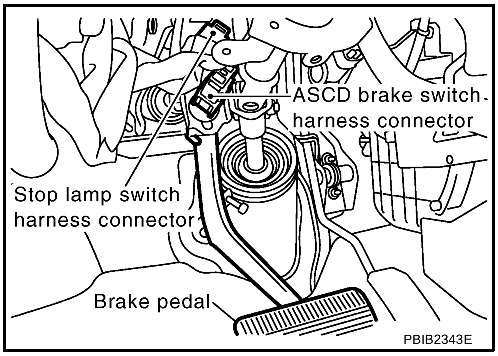

CONSULT-II Reference Value in Data Monitor Mode

ABS00CX1

Specification data are reference values.

MONITOR ITEM	CONDITION		SPECIFICATION
BRAKE SW1 (ASCD brake switch)	● Ignition switch: ON	● Brake pedal: Fully released (A/T) ● Brake pedal and clutch pedal: Fully released (M/T)	ON
		● Brake pedal: Slightly depressed (A/T) ● Brake pedal and/or clutch pedal: Slightly depressed (M/T)	OFF
BRAKE SW2 (STOP lamp switch)	● Ignition switch: ON	Brake pedal: Fully released	OFF
		Brake pedal: Slightly depressed	ON

On Board Diagnosis Logic

ABS00CX2

This self-diagnosis has the one trip detection logic.
The MIL will not light up for this diagnosis.

NOTE:

- **If DTC P1572 is displayed with DTC P0605, first perform the trouble diagnosis for DTC P0605. Refer to EC-416 .**
- **This self-diagnosis has one trip detection logic. When malfunction A is detected, DTC is not stored in ECM memory. And in that case, 1st trip DTC and 1st trip freeze frame data are displayed. 1st trip DTC is erased when ignition switch is turned OFF. And even when malfunction A is detected in two consecutive trips, DTC is not stored in ECM memory.**

DTC No.	Trouble Diagnosis Name	DTC Detecting Condition		Possible Cause
P1572 1572	ASCD brake switch	A)	When the vehicle speed is above 30km/h (19 MPH), ON signals from the stop lamp switch and the ASCD brake switch are sent to ECM at the same time.	● Harness or connectors (The stop lamp switch circuit is shorted.) ● Harness or connectors (The ASCD brake switch circuit is shorted.) ● Harness or connectors (M/T models) (The ASCD clutch switch circuit is shorted.) ● Stop lamp switch ● ASCD brake switch ● ASCD clutch switch (M/T models) ● Incorrect stop lamp switch installation ● Incorrect ASCD brake switch installation ● Incorrect ASCD clutch switch installation (M/T models) ● ECM
		B)	ASCD brake switch signal is not sent to ECM for extremely long time while the vehicle is driving	

DTC Confirmation Procedure

ABS00CX3

CAUTION:
Always drive vehicle at a safe speed.

NOTE:

- If DTC Confirmation Procedure has been previously conducted, always turn ignition switch OFF and wait at least 10 seconds before conducting the next test.
- Procedure for malfunction B is not described here. It takes extremely long time to complete procedure for malfunction B. By performing procedure for malfunction A, the incident that causes malfunction B can be detected.

TESTING CONDITION:
Steps 4 and 5 may be conducted with the drive wheels lifted in the shop or by driving the vehicle. If a road test is expected to be easier, it is unnecessary to lift the vehicle.

WITH CONSULT-II

1. Start engine.
2. Select “DATA MONITOR” mode with CONSULT-II.
3. Press CRUISE (MAIN) switch and make sure that CRUISE indicator lights up.
4. Drive the vehicle for at least 5 consecutive seconds under the following condition.

VHCL SPEED SE	More than 30 km/h (19 MPH)
Shift lever	Suitable position

If 1st trip DTC is detected, go to EC-531, "Diagnostic Procedure" .
If 1st trip DTC is not detected, go to the following step.

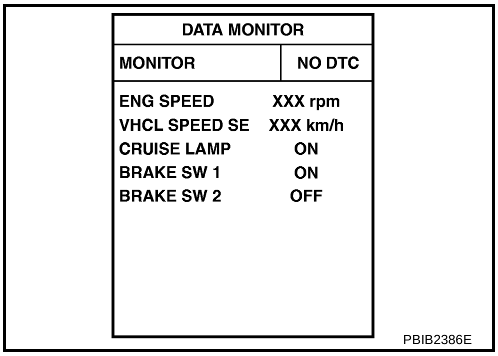

PBIB2386E

5. Drive the vehicle for at least 5 consecutive seconds under the following condition.

VHCL SPEED SE	More than 30 km/h (19 MPH)
Shift lever	Suitable position
Driving location	Depress the brake pedal for more than 5 seconds so as not to come off from the above-mentioned vehicle speed.

6. If 1st trip DTC is detected, go to EC-531, "Diagnostic Procedure" .

WITH GST

Follow the procedure “WITH CONSULT-II” above.

Wiring Diagram

ABS00CX4

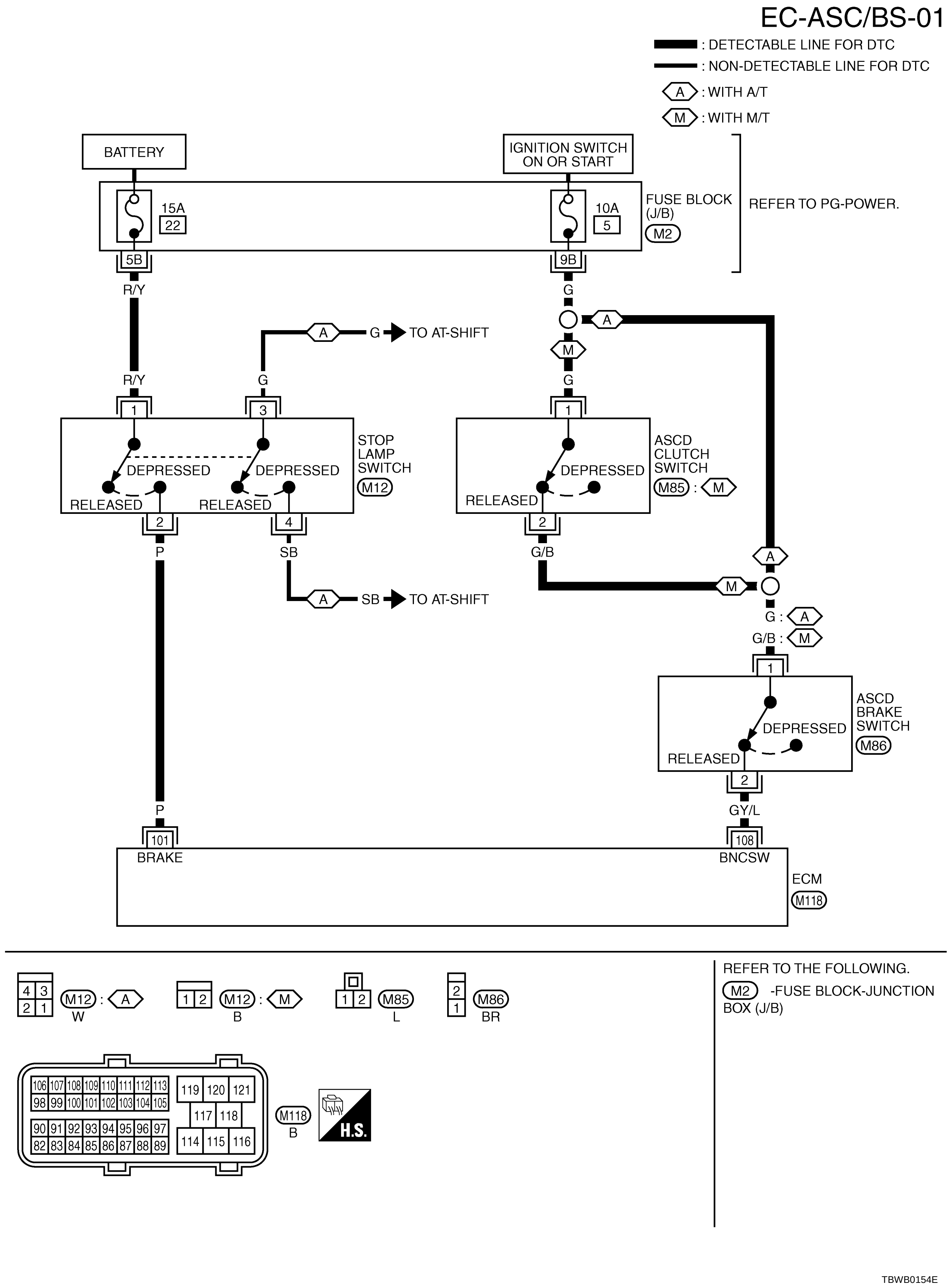

Specification data are reference values and are measured between each terminal and ground.

CAUTION:

Do not use ECM ground terminals when measuring input/output voltage. Doing so may result in damage to the ECM's transistor. Use a ground other than ECM terminals, such as the ground.

TERMINAL NO.	WIRE COLOR	ITEM	CONDITION	DATA (DC Voltage)
101	P	Stop lamp switch	**[Ignition switch: OFF]** ● Brake pedal: Fully released	Approximately 0V
			[Ignition switch: OFF] ● Brake pedal: Slightly depressed	BATTERY VOLTAGE (11 - 14V)
108	GY/L	ASCD brake switch	**[Ignition switch: ON]** ● Brake pedal: Slightly depressed (A/T) ● Brake pedal and/or clutch pedal: Slightly depressed (M/T)	Approximately 0V
			[Ignition switch: ON] ● Brake pedal: Fully released (A/T) ● Brake pedal and clutch pedal: Fully released (M/T)	BATTERY VOLTAGE (11 - 14V)

Diagnostic Procedure

ABS00CX5

A
EC
C
D
E
F
G
H
I
J
K
L
M

1. CHECK OVERALL FUNCTION-I

With CONSULT-II

1. Turn ignition switch ON.
2. Select “BRAKE SW1” in “DATA MONITOR” mode with CONSULT-II.
3. Check “BRAKE SW1” indication under the following conditions.

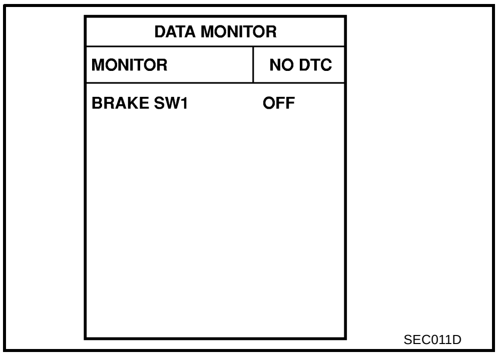

SEC011D

A/T models

CONDITION	INDICATION
Brake pedal: Slightly depressed	OFF
Brake pedal: Fully released	ON

M/T models

CONDITION	INDICATION
Clutch pedal or brake pedal: Slightly depressed	OFF
Clutch pedal and brake pedal: Fully released	ON

Without CONSULT-II

1. Turn ignition switch ON.
2. Check voltage between ECM terminal 108 and ground under the following conditions.

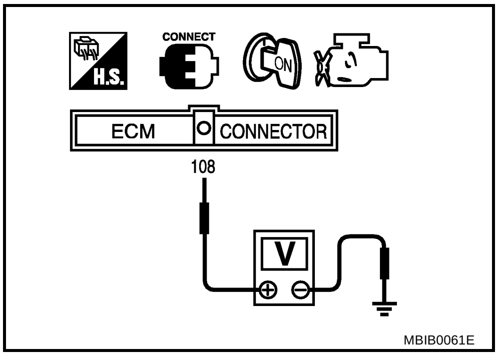

MBIB0061E

A/T models

CONDITION	VOLTAGE
Brake pedal: Slightly depressed	Approximately 0V
Brake pedal: Fully released	Battery voltage

M/T models

CONDITION	VOLTAGE
Clutch pedal or brake pedal: Slightly depressed	Approximately 0V
Clutch pedal and brake pedal: Fully released	Battery voltage

OK or NG

OK >> GO TO 2.
NG (M/T models) >>GO TO 3.
NG (A/T models) >>GO TO 8.

2. CHECK OVERALL FUNCTION-II

With CONSULT-II

Check “BRAKE SW2” indication in “DATA MONITOR” mode.

CONDITION	INDICATION
Brake pedal: Fully released	OFF
Brake pedal: Slightly depressed	ON

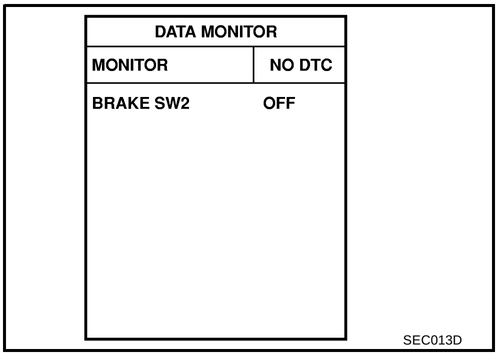

SEC013D

Without CONSULT-II

Check voltage between ECM terminal 101 and ground under the following conditions.

CONDITION	VOLTAGE
Brake pedal: Fully released	Approximately 0V
Brake pedal: Slightly depressed	Battery voltage

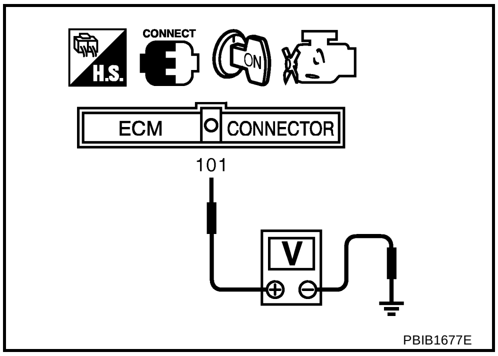

PBIB1677E

OK or NG

OK >> GO TO 18.
NG >> GO TO 13.

3. CHECK ASCD CLUTCH SWITCH CIRCUIT

1. Turn ignition switch OFF.
2. Disconnect ASCD brake switch harness connector.
3. Turn ignition switch ON.

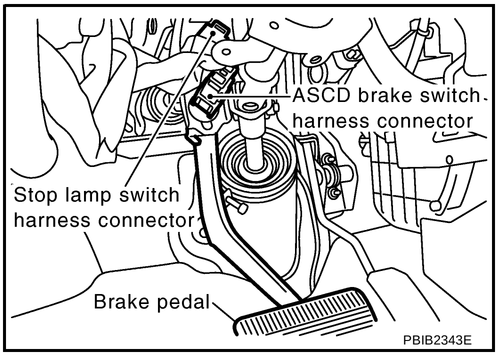

PBIB2343E

4. Check voltage between ASCD brake switch terminal 1 and ground under the following conditions with CONSULT-II or tester.

CONDITION	VOLTAGE
Clutch pedal: Fully released	Battery voltage
Clutch pedal: Slightly depressed	Approx. 0V

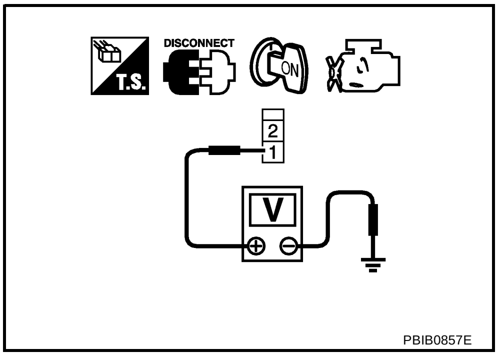

PBIB0857E

OK or NG

OK >> GO TO 10.
NG >> GO TO 4.

4. CHECK ASCD CLUTCH SWITCH POWER SUPPLY CIRCUIT

1. Turn ignition switch OFF.
2. Disconnect ASCD clutch switch harness connector.
3. Turn ignition switch ON.
4. Check voltage between ASCD clutch switch terminal 1 and ground with CONSULT-II or tester.

Voltage: Battery voltage

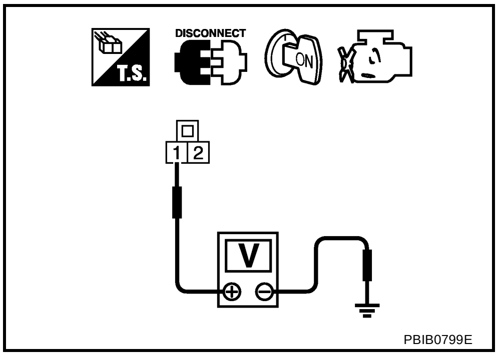

OK or NG

OK >> GO TO 6.
NG >> GO TO 5.

5. DETECT MALFUNCTIONING PART

Check the following.

- Fuse block (J/B) connector M2
- 10A fuse
- Harness for open or short between ASCD clutch switch and fuse

>> Repair open circuit or short to ground or short to power in harness or connectors.

6. CHECK ASCD CLUTCH SWITCH INPUT SIGNAL CIRCUIT FOR OPEN AND SHORT

1. Turn ignition switch OFF.
2. Check harness continuity between ASCD clutch switch terminal 2 and ASCD brake switch terminal 1. Refer to Wiring Diagram.

Continuity should exist.

3. Also check harness for short to ground and short to power.

OK or NG

OK >> GO TO 7.
NG >> Repair open circuit or short to ground or short to power in harness or connectors.

7. CHECK ASCD CLUTCH SWITCH

Refer to EC-536, "Component Inspection"

OK or NG

OK >> GO TO 18.
NG >> Replace ASCD clutch switch.

8. CHECK ASCD BRAKE SWITCH POWER SUPPLY CIRCUIT

1. Turn ignition switch OFF.
2. Disconnect ASCD brake switch harness connector.
3. Turn ignition switch ON.

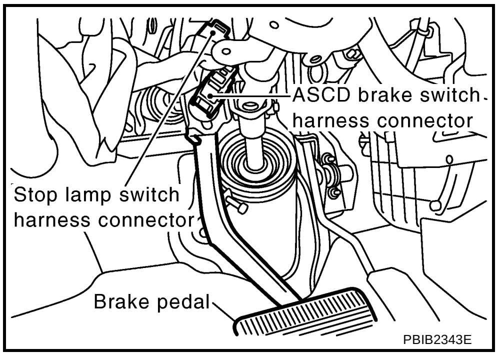

4. Check voltage between ASCD brake switch terminal 1 and ground with CONSULT-II or tester.

Voltage: Battery voltage

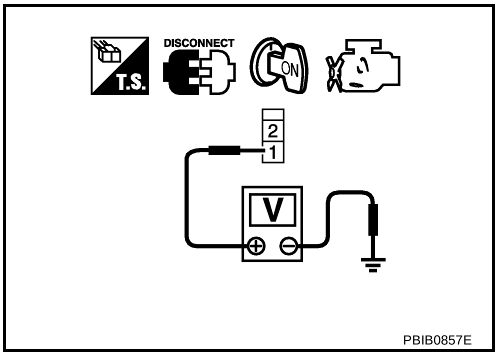

OK or NG

OK >> GO TO 10.
NG >> GO TO 9.

9. DETECT MALFUNCTIONING PART

Check the following.

- Fuse block (J/B) connector M2
- 10A fuse
- Harness for open or short between ASCD brake switch and fuse

>> Repair open circuit or short to ground or short to power in harness or connectors.

10. CHECK ASCD BRAKE SWITCH INPUT SIGNAL CIRCUIT FOR OPEN AND SHORT

1. Turn ignition switch OFF.
2. Disconnect ECM harness connector.
3. Check harness continuity between ECM terminal 108 and ASCD brake switch terminal 2. Refer to Wiring Diagram.

Continuity should exist.

4. Also check harness for short to ground or short to power.

OK or NG

OK >> GO TO 12.
NG >> GO TO 11.

11. DETECT MALFUNCTIONING PART

Check harness for open or short between ECM and ASCD brake switch.

>> Repair open circuit or short to ground or short to power in harness or connectors.

A
EC
C
D
E
F
G
H
I
J
K
L
M

12. CHECK ASCD BRAKE SWITCH

Refer to EC-536, "Component Inspection"

OK or NG

OK >> GO TO 18.
NG >> Replace ASCD brake switch.

13. CHECK STOP LAMP SWITCH POWER SUPPLY CIRCUIT

1. Turn ignition switch OFF.
2. Disconnect stop lamp switch harness connector.

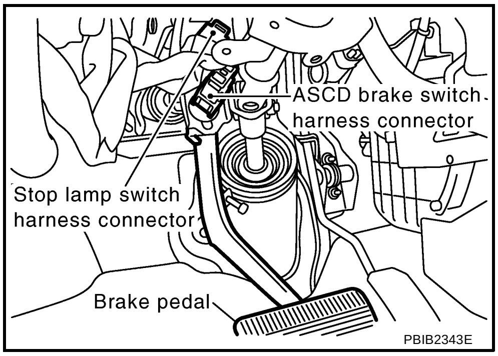

3. Check voltage between stop lamp switch terminal 1 and ground with CONSULT -II or tester.

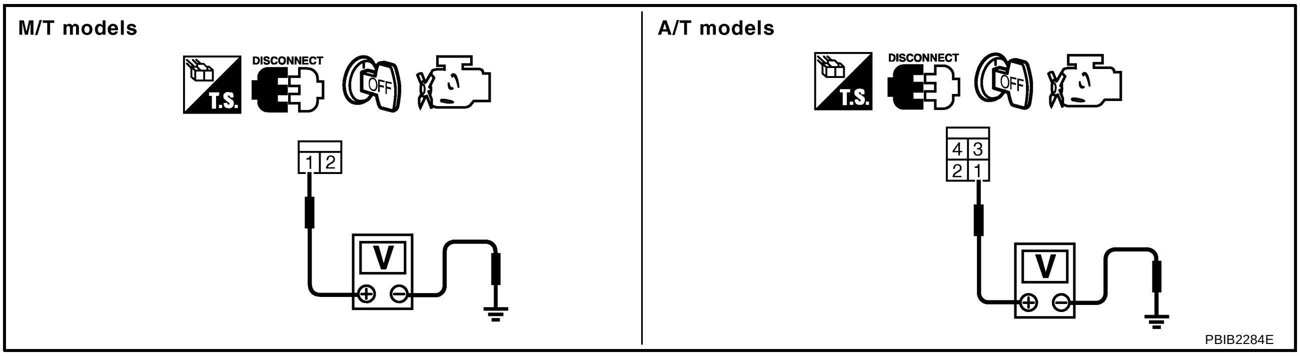

Voltage: Battery voltage

OK or NG

OK >> GO TO 15.
NG >> GO TO 14.

14. DETECT MALFUNCTIONING PART

Check the following.

- Fuse block (J/B) connector M2
- 15A fuse
- Harness for open or short between stop lamp switch and fuse

>> Repair open circuit or short to ground or short to power in harness or connectors.

15. CHECK STOP LAMP SWITCH INPUT SIGNAL CIRCUIT FOR OPEN AND SHORT

1. Disconnect ECM harness connector.
2. Check harness continuity between ECM terminal 101 and stop lamp switch terminal 2.
   Refer to Wiring Diagram.

   Continuity should exist.

3. Also check harness for short to ground and short to power.

OK or NG

OK >> GO TO 17.
NG >> GO TO 16.

16. DETECT MALFUNCTIONING PART

Check harness for open or short between ECM and stop lamp switch.

>> Repair open circuit or short to ground or short to power in harness or connectors.

17. CHECK STOP LAMP SWITCH

Refer to EC-536, "Component Inspection"

OK or NG

OK >> GO TO 18.
NG >> Replace stop lamp switch.

18. CHECK INTERMITTENT INCIDENT

Refer to EC-153, "TROUBLE DIAGNOSIS FOR INTERMITTENT INCIDENT" .

>> **INSPECTION END**

Component Inspection

ABS00CX6

ASCD BRAKE SWITCH

1. Turn ignition switch OFF.
2. Disconnect ASCD brake switch harness connector.
3. Check continuity between ASCD brake switch terminals 1 and 2 under the following conditions.

Condition	Continuity
Brake pedal: Fully released.	Should exist.
Brake pedal: Slightly depressed.	Should not exist.

If NG, adjust ASCD brake switch installation, refer to BR-6, "BRAKE PEDAL" , and perform step 3 again.

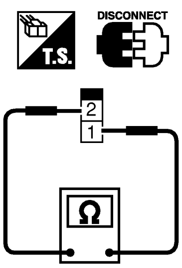

SEC023D

ASCD CLUTCH SWITCH (FOR M/T MODELS)

1. Turn ignition switch OFF.
2. Disconnect ASCD clutch switch harness connector.

3. Check continuity between ASCD clutch switch terminals 1 and 2 under the following conditions.

Condition	Continuity
Clutch pedal: Fully released.	Should exist.
Clutch pedal: Slightly depressed.	Should not exist.

If NG, adjust ASCD clutch switch installation, refer to CL-5, "CLUTCH PEDAL" , and perform step 3 again.

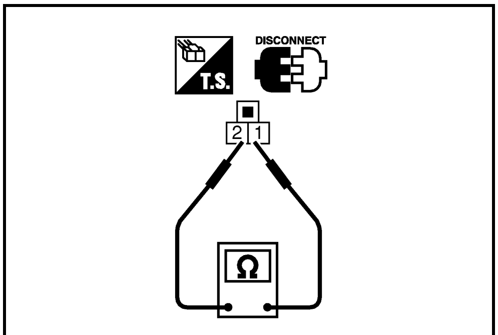

SEC024D

STOP LAMP SWITCH

1. Turn ignition switch OFF.
2. Disconnect stop lamp switch harness connector.
3. Check continuity between stop lamp switch terminals 1 and 2 under the following conditions.

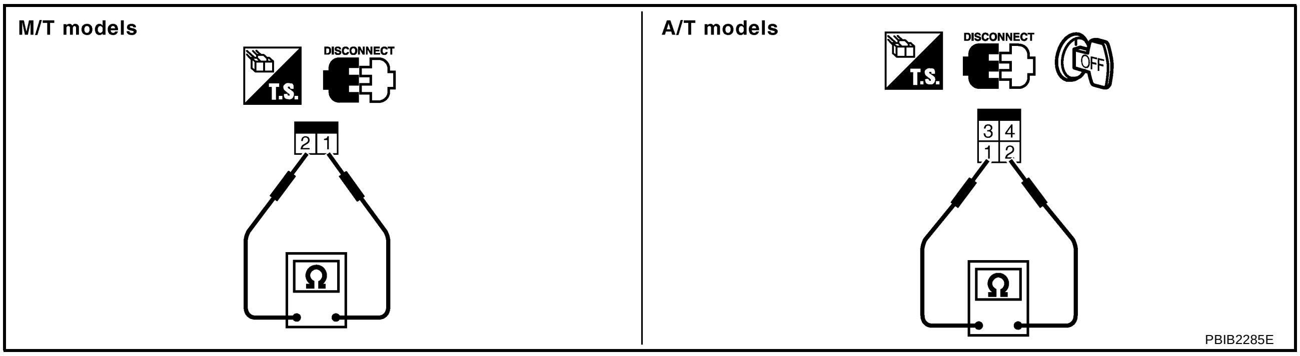

PBIB2285E

Condition	Continuity
Brake pedal: Fully released.	Should not exist.
Brake pedal: Slightly depressed.	Should exist.

If NG, adjust stop lamp switch installation, refer to BR-6, "BRAKE PEDAL" , and perform step 3 again.

DTC P1574 ASCD VEHICLE SPEED SENSOR

PFP:31036

Component Description

ABS00CX7

The ECM receives two vehicle speed sensor signals via CAN communication line. One is sent from combination meter, and the other is from TCM (Transmission control module). The ECM uses these signals for ASCD control. Refer to EC-27, "AUTOMATIC SPEED CONTROL DEVICE (ASCD)" for ASCD functions.

On Board Diagnosis Logic

ABS00CX8

This self-diagnosis has the one trip detection logic.
The MIL will not light up for this diagnosis.

NOTE:

- **If DTC P1574 is displayed with DTC U1000, U1001, first perform the trouble diagnosis for DTC U1000, U1001. Refer to EC-162, "DTC U1000, U1001 CAN COMMUNICATION LINE" .**
- **If DTC P1574 is displayed with DTC P0500, first perform the trouble diagnosis for DTC P0500. Refer to EC-405, "DTC P0500 VSS"**
- **If DTC P1574 is displayed with DTC P0605, first perform the trouble diagnosis for DTC P0605. Refer to EC-416, "DTC P0605 ECM"**

DTC No.	Trouble Diagnosis Name	DTC Detecting Condition	Possible Cause
P1574 1574	ASCD vehicle speed sensor	ECM detects a difference between two vehicle speed signals is out of the specified range.	• Harness or connectors (The CAN communication line is open or shorted.) • Harness or connectors (The combination meter circuit is open or shorted.) • TCM (A/T models) • Combination meter • VDC/TCS/ABS control unit (with VDC models) • ABS actuator and electric unit (control unit) (without VDC models) • Wheel sensor • ECM

DTC Confirmation Procedure

ABS00CX9

CAUTION:
Always drive vehicle at a safe speed.

NOTE:
If DTC Confirmation Procedure has been previously conducted, always turn ignition switch OFF and wait at least 10 seconds before conducting the next test.

TESTING CONDITION:
Step 3 may be conducted with the drive wheels lifted in the shop or by driving the vehicle. If a road test is expected to be easier, it is unnecessary to lift the vehicle.

WITH CONSULT-II

1. Start engine.
2. Select “DATA MONITOR” mode with CONSULT-II.
3. Drive the vehicle at more than 40 km/h (25MPH).
4. If DTC is detected, go to EC-539, "Diagnostic Procedure" .

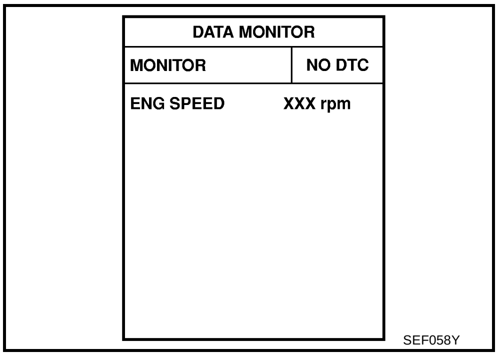

WITH GST

Follow the procedure “WITH CONSULT-II” above.

Diagnostic Procedure

ABS00CXA

1. CHECK DTC WITH TCM

Check DTC with TCM. Refer to AT-39, "ON BOARD DIAGNOSTIC (OBD) SYSTEM" .

OK or NG

OK >> GO TO 2.

NG >> Perform trouble shooting relevant to DTC indicated.

2. CHECK DTC WITH VDC/TCS/ABS CONTROL UNIT (WITH VDC MODELS) OR ABS ACTUATOR AND ELECTRIC UNIT (CONTROL UNIT) (WITHOUT VDC MODELS)

Refer to BRC-9, "TROUBLE DIAGNOSIS" (without VDC models) or BRC-48, "TROUBLE DIAGNOSIS" (with VDC models).

OK or NG

OK >> GO TO 3.

NG >> Repair or replace.

3. CHECK COMBINATION METER

Check combination meter function.
Refer to DI-4, "COMBINATION METERS" .

>> **INSPECTION END**

DTC P1706 PNP SWITCH

PFP:32006

Component Description

ABS00CXB

When the shift lever position is P or N (A/T), Neutral (M/T) park/neutral position (PNP) switch is ON.
ECM detects the position because the continuity of the line (the ON signal) exists.

CONSULT-II Reference Value in Data Monitor Mode

ABS00CXC

Specification data are reference values.

MONITOR ITEM	CONDITION		SPECIFICATION
P/N POSI SW	● Ignition switch: ON	Shift lever: P or N (A/T), Neutral (M/T)	ON
		Shift lever: Except above position	OFF

On Board Diagnosis Logic

ABS00CXD

DTC No.	Trouble diagnosis name	DTC detecting condition	Possible cause
P1706 1706	Park/neutral position switch	The signal of the park/neutral position (PNP) switch is not changed in the process of engine starting and driving.	● Harness or connectors [The park/neutral position (PNP) switch circuit is open or shorted.] ● Park/neutral position (PNP) switch

DTC Confirmation Procedure

ABS00CXE

CAUTION:

Always drive vehicle at a safe speed.

NOTE:

If DTC Confirmation Procedure has been previously conducted, always turn ignition switch OFF and wait at least 10 seconds before conducting the next test.

WITH CONSULT-II

1. Turn ignition switch ON.
2. Select “P/N POSI SW” in “DATA MONITOR” mode with CONSULT-II. Then check the “P/N POSI SW” signal under the following conditions.

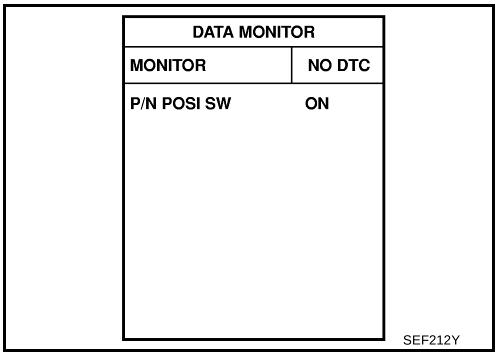

Position (Selector lever)	Known-good signal
N or P position (A/T) Neutral position (M/T)	ON
Except above position	OFF

If NG, go to EC-543, "Diagnostic Procedure" .
If OK, go to following step.

3. Select “DATA MONITOR” mode with CONSULT-II.
4. Start engine and warm it up to normal operating temperature.
5. Maintain the following conditions for at least 60 consecutive seconds.

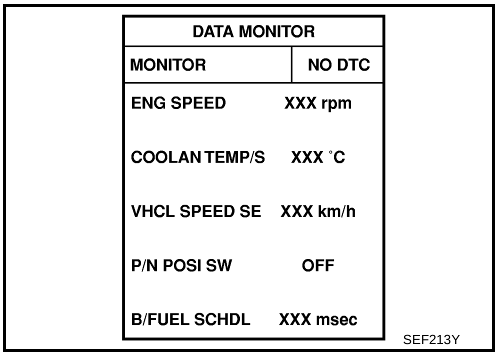

ENG SPEED	More than 1,500 rpm
COOLAN TEMP/S	More than 70°C (158°F)
B/FUEL SCHDL	3.0 - 31.8 msec
VHCL SPEED SE	More than 64 km/h (40 MPH)
Shift lever position	Suitable position

6. If 1st trip DTC is detected, go to EC-543, "Diagnostic Procedure" .

Overall Function Check

ABS00CXF

Use this procedure to check the overall function of the park/neutral position (PNP) switch circuit. During this check, a 1st trip DTC might not be confirmed.

WITH GST

1. Turn ignition switch ON.
2. Check voltage between ECM terminal 102 (PNP switch signal) and body ground under the following conditions.

Condition (Shift lever)	Voltage V (Known good data)
P or N position (A/T) Neutral position (M/T)	Approx. 0
Except above position	BATTERY VOLTAGE (11 - 14V)

3. If NG, go to EC-543, "Diagnostic Procedure" .

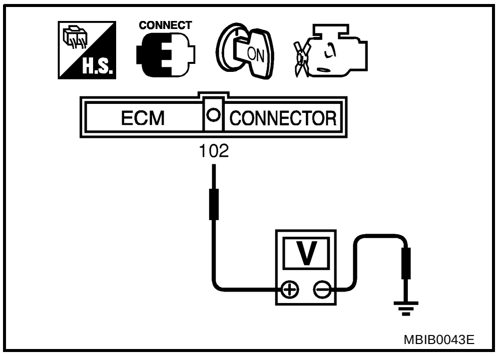

Wiring Diagram

ABS00CXG

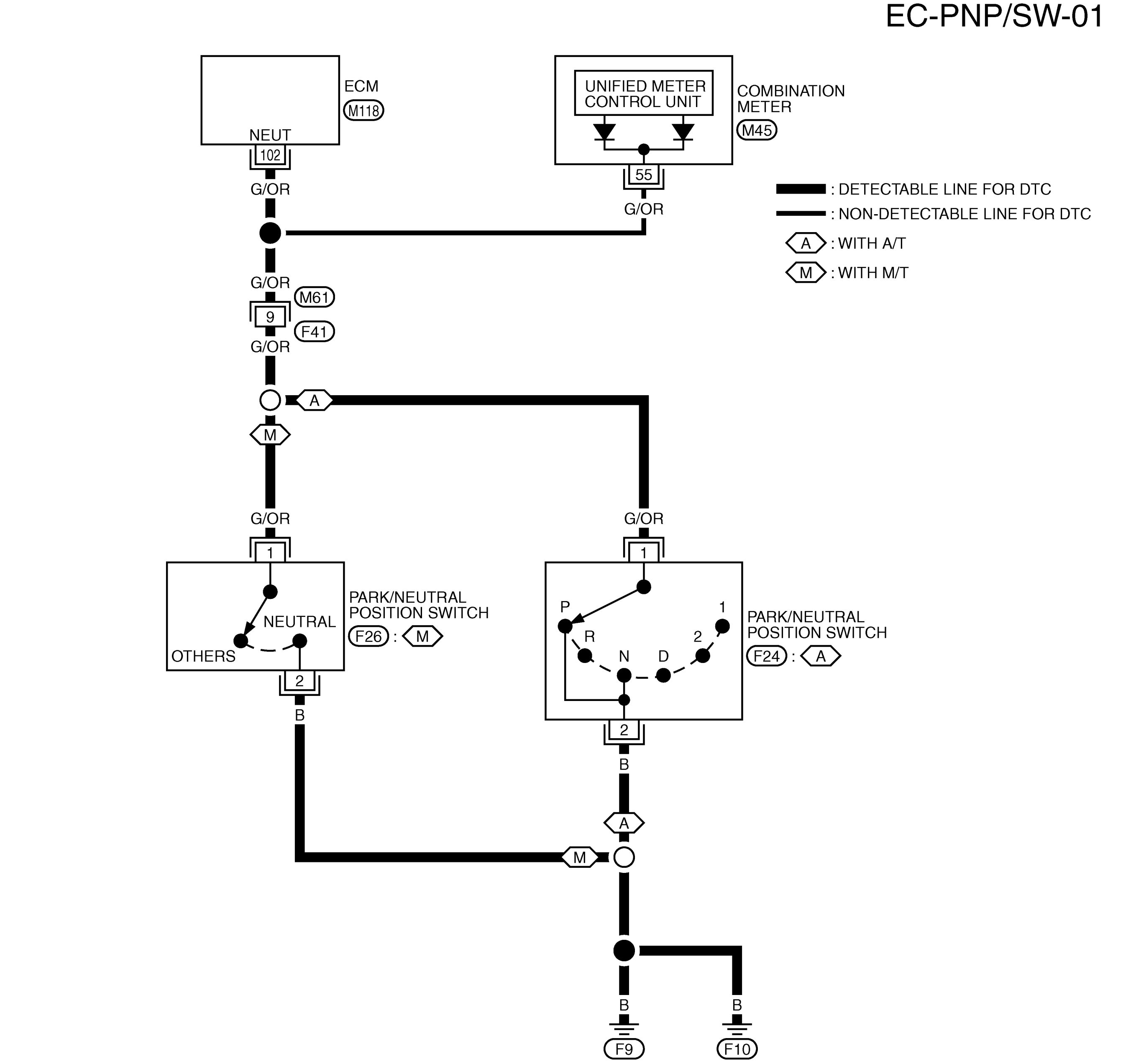

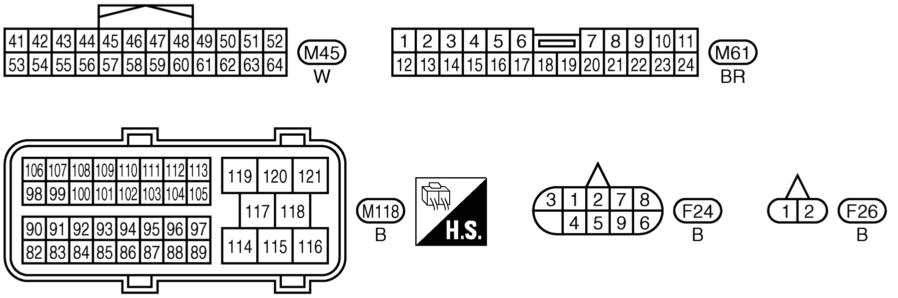

TBWB0203E

Specification data are reference values and are measured between each terminal and ground.

CAUTION:

Do not use ECM ground terminals when measuring input/output voltage. Doing so may result in damage to the ECM's transistor. Use a ground other than ECM terminals, such as the ground.

TERMINAL NO.	WIRE COLOR	ITEM	CONDITION	DATA (DC Voltage)
102	G/OR	PNP switch	**[Ignition switch: ON]** ● Shift lever: P or N (A/T), Neutral (M/T)	Approximately 0V
			[Ignition switch: ON] ● Except above position	BATTERY VOLTAGE (11 - 14V)

Diagnostic Procedure

ABS00D8R

1. CHECK PNP SWITCH GROUND CIRCUIT FOR OPEN AND SHORT

1. Turn ignition switch OFF.
2. Disconnect park/neutral position (PNP) switch harness connector.
3. Check harness continuity between PNP switch terminal 2 and ground.
   Refer to Wiring Diagram.

   Continuity should exist.

4. Also check harness for short to power.

OK or NG

OK >> GO TO 2.
NG >> Repair open circuit or short to power in harness or connectors.

2. CHECK PNP SWITCH INPUT SIGNAL CIRCUIT FOR OPEN AND SHORT

1. Disconnect ECM harness connector.
2. Check harness continuity between PNP switch terminal 1 and ECM terminal 102.
   Refer to Wiring Diagram.

   Continuity should exist.

3. Also check harness for short to ground and short to power.

OK or NG

OK >> GO TO 4.
NG >> GO TO 3.

3. DETECT MALFUNCTIONING PART

Check the following.

- Harness connectors M61, F41
- Harness for open or short between PNP switch and ECM

>> Repair open circuit or short to ground or short to power in harness or connectors.

4. CHECK PNP SWITCH

Refer to AT-98, "DTC P0705 PARK/NEUTRAL POSITION (PNP) SWITCH" (A/T) or MT-13, "PARK/NEUTRAL POSITION SWITCH" (M/T).

OK or NG

OK >> GO TO 4.
NG >> Replace PNP switch.

5. CHECK INTERMITTENT INCIDENT

Refer to EC-153, "TROUBLE DIAGNOSIS FOR INTERMITTENT INCIDENT" .

>> **INSPECTION END**

DTC P1800 VIAS CONTROL SOLENOID VALVE

PFP:14955

Component Description

ABS00CXI

The VIAS control solenoid valve cuts the intake manifold vacuum signal for power valve actuator. It responds to ON/OFF signals from the ECM. When the solenoid is OFF, the vacuum signal from the intake manifold is cut. When the ECM sends an ON signal the coil pulls the plunger downward and feeds the vacuum signal to the power valve actuator.

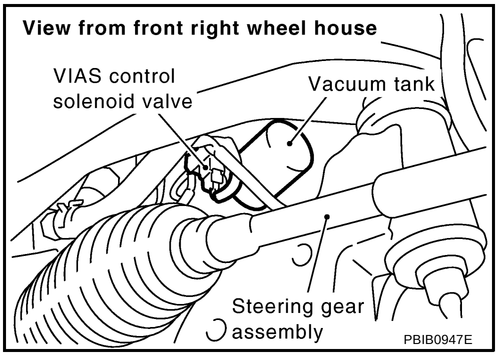

CONSULT-II Reference Value in Data Monitor Mode

ABS00CXJ

Specification data are reference values.

MONITOR ITEM	CONDITION		SPECIFICATION
VIAS S/V	• Engine: After warming up	Idle	OFF
		More than 5,000 rpm	ON

On Board Diagnosis Logic

ABS00CXK

The MIL will not light up for this self-diagnosis.

DTC No.	Trouble diagnosis name	DTC detecting condition	Possible cause
P1800 1800	VIAS control solenoid valve circuit	An excessively low or high voltage signal is sent to ECM through the valve	• Harness or connectors (The solenoid valve circuit is open or shorted.) • VIAS control solenoid valve

DTC Confirmation Procedure

ABS00CXL

NOTE:

If DTC Confirmation Procedure has been previously conducted, always turn ignition switch OFF and wait at least 10 seconds before conducting the next test.

TESTING CONDITION:

Before performing the following procedure, confirm that battery voltage is between 11V at idle.

WITH CONSULT-II

1. Turn ignition switch ON.
2. Select “DATA MONITOR” mode with CONSULT-II.
3. Start engine and let it idle for at least 5 seconds.
4. If 1st trip DTC is detected, go to EC-547, "Diagnostic Procedure" .

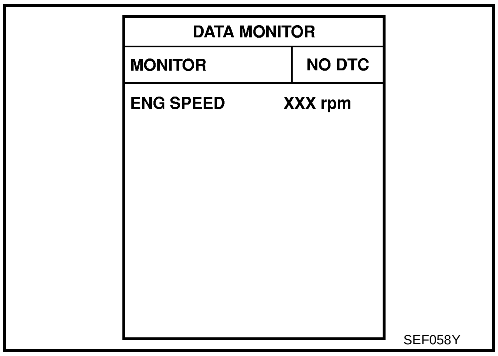

WITH GST

Follow the procedure “WITH CONSULT-II” above.

Wiring Diagram

ABS00CXM

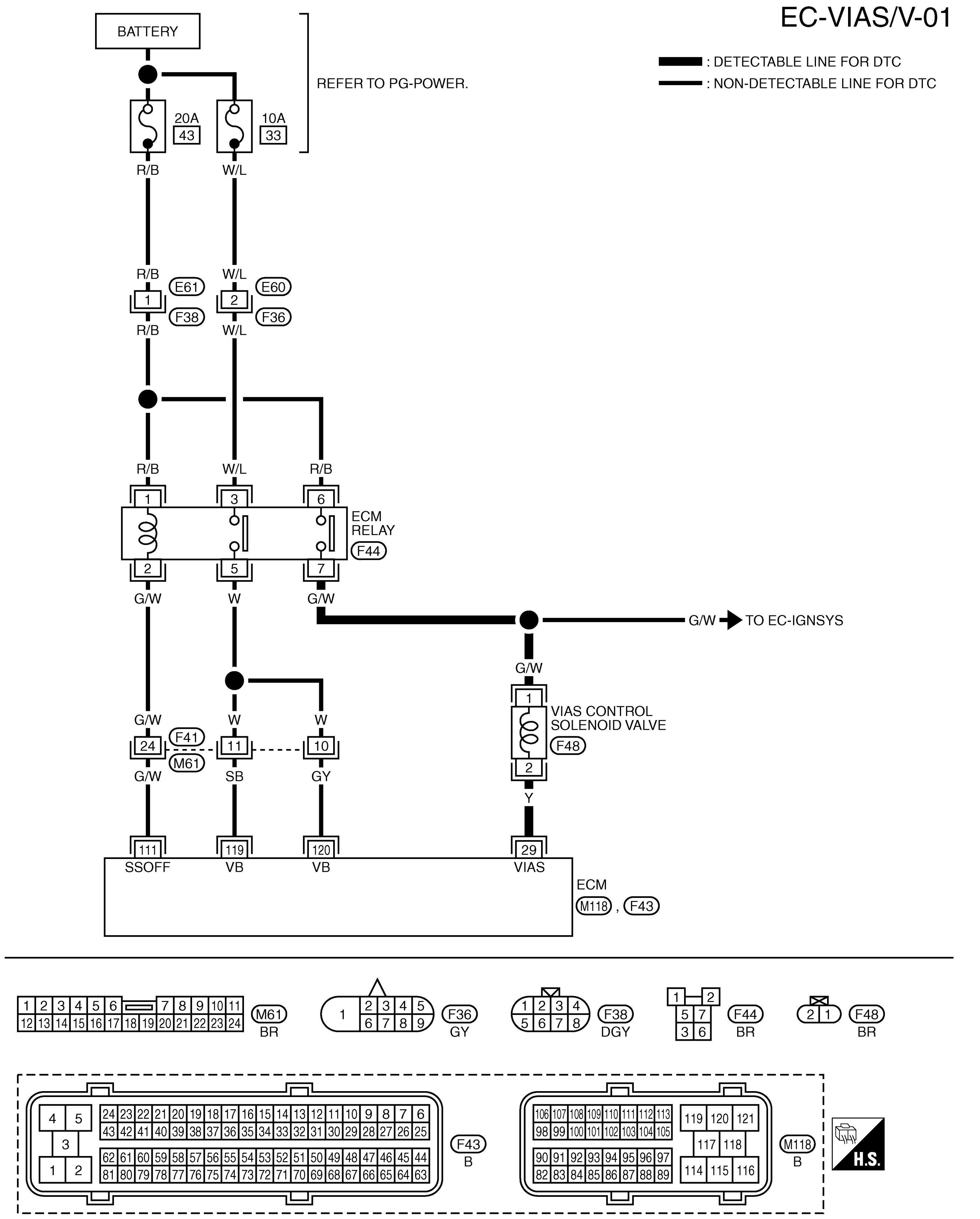

TBWB0131E

Specification data are reference values and are measured between each terminal and ground.

CAUTION:

Do not use ECM ground terminals when measuring input/output voltage. Doing so may result in damage to the ECM's transistor. Use a ground other than ECM terminals, such as the ground.

TERMINAL NO.	WIRE COLOR	ITEM	CONDITION	DATA (DC Voltage)
29	Y	VIAS control solenoid valve	**[Engine is running]** ● Idle speed	BATTERY VOLTAGE (11 - 14V)
			[Engine is running] ● Engine speed is above 5,000 rpm	0 - 1.0V
111	G/W	ECM relay (Self shut-off)	**[Engine is running]** **[Ignition switch: OFF]** ● A few seconds after turning ignition switch OFF	0 - 1.0V
			[Ignition switch: OFF] ● More than a few seconds after turning ignition switch OFF	BATTERY VOLTAGE (11 - 14V)
119 120	SB GY	Power supply for ECM	**[Ignition switch: ON]**	BATTERY VOLTAGE (11 - 14V)

Diagnostic Procedure

ABS00CXN

1. CHECK VIAS CONTROL SOLENOID VALVE POWER SUPPLY CIRCUIT

1. Turn ignition switch OFF.
2. Disconnect VIAS control solenoid valve harness connector.
3. Turn ignition switch ON.

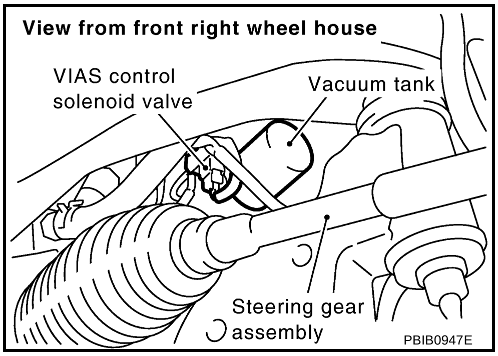

4. Check voltage between VIAS control solenoid valve terminal 1 and ground with CONSULT-II or tester.

   Voltage: Battery voltage

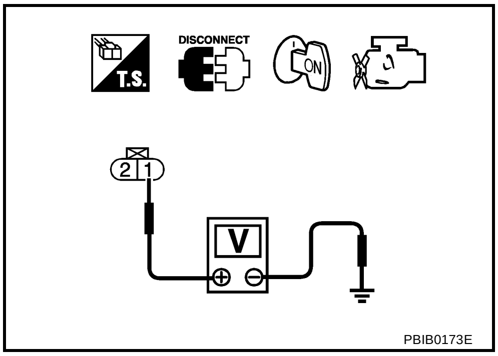

OK or NG

OK >> GO TO 2.

NG >> Repair open circuit or short to ground or short to power in harness connectors.

2. CHECK VIAS CONTROL SOLENOID VALVE OUTPUT SIGNAL CIRCUIT FOR OPEN AND SHORT

1. Turn ignition switch OFF.
2. Disconnect ECM harness connector.
3. Check harness continuity between ECM terminal 29 and VIAS control solenoid valve terminal 2. Refer to Wiring Diagram.

Continuity should exist.

4. Also check harness for short to ground and short to power.

OK or NG

OK >> GO TO 3.
NG >> Repair open circuit or short to ground or short to power in harness or connectors.

3. CHECK VIAS CONTROL SOLENOID VALVE

Refer to EC-548, "Component Inspection" .

OK or NG

OK >> GO TO 4.
NG >> Replace VIAS control solenoid valve.

4. CHECK INTERMITTENT INCIDENT

Refer to EC-153, "TROUBLE DIAGNOSIS FOR INTERMITTENT INCIDENT" .

>> **INSPECTION END**

Component Inspection

ABS00CXO

VIAS CONTROL SOLENOID VALVE

With CONSULT-II

1. Reconnect harness connectors disconnected.
2. Turn ignition switch ON.
3. Perform “VIAS SOL VALVE” in “ACTIVE TEST” mode.
4. Check air passage continuity and operation delay time under the following conditions.

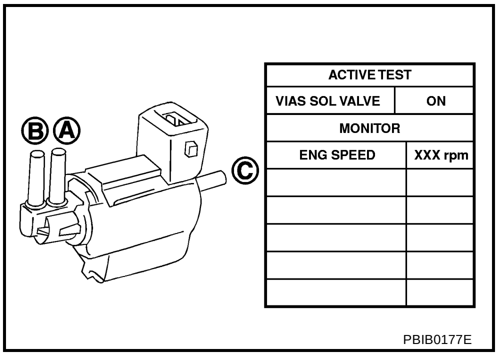

Condition VIAS SOL VALVE	Air passage continuity between A and B	Air passage continuity between A and C
ON	Yes	No
OFF	No	Yes

Operation takes less than 1 second.

With GST

Check air passage continuity and operation delay time under the following conditions.

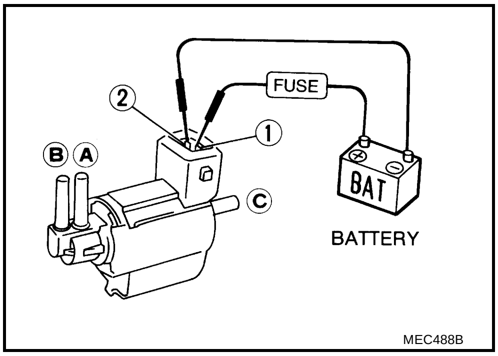

Condition	Air passage continuity between A and B	Air passage continuity between A and C
12V direct current supply between terminals 1 and 2	Yes	No
No supply	No	Yes

Operation takes less than 1 second.

Removal and Installation

ABS00CXP

VIAS CONTROL SOLENOID VALVE

Refer to EM-16, "INTAKE MANIFOLD" .

DTC P1805 BRAKE SWITCH

PFP:25320

Description

ABS00CXQ

Brake switch signal is applied to the ECM through the stop lamp switch when the brake pedal is depressed. This signal is used mainly to decrease the engine speed when the vehicle is driving.

CONSULT-II Reference Value in Data Monitor Mode

ABS00CXR

Specification data are reference values.

MONITOR ITEM	CONDITION		SPECIFICATION
BRAKE SW	• Ignition switch: ON	Brake pedal: Fully released	OFF
		Brake pedal: Slightly depressed	ON

On Board Diagnosis Logic

ABS00CXS

The MIL will not light up for this diagnosis.

DTC No.	Trouble diagnosis name	DTC detecting condition	Possible cause
P1805 1805	Brake switch	A brake switch signal is not sent to ECM for extremely long time while the vehicle is driving.	• Harness or connectors (The stop lamp switch circuit is open or shorted.) • Stop lamp switch

FAIL-SAFE MODE

When the malfunction is detected, the ECM enters fail-safe mode.

Engine operating condition in fail-safe mode	
ECM controls the electric throttle control actuator by regulating the throttle opening to a small range. Therefore, acceleration will be poor.	
Vehicle condition	Driving condition
When engine is idling	Normal
When accelerating	Poor acceleration

DTC Confirmation Procedure

ABS00CXT

WITH CONSULT-II

1. Turn ignition switch ON.
2. Fully depress the brake pedal for at least 5 seconds.
3. Erase the DTC with CONSULT-II.
4. Select “DATA MONITOR” mode with CONSULT-II.
5. If 1st trip DTC is detected, go to EC-552, "Diagnostic Procedure" .

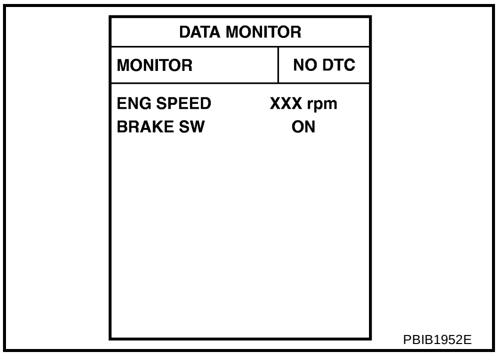

WITH GST

Follow the procedure “WITH CONSULT-II” above.

Wiring Diagram

ABS00CXU

EC-BRK/SW-01

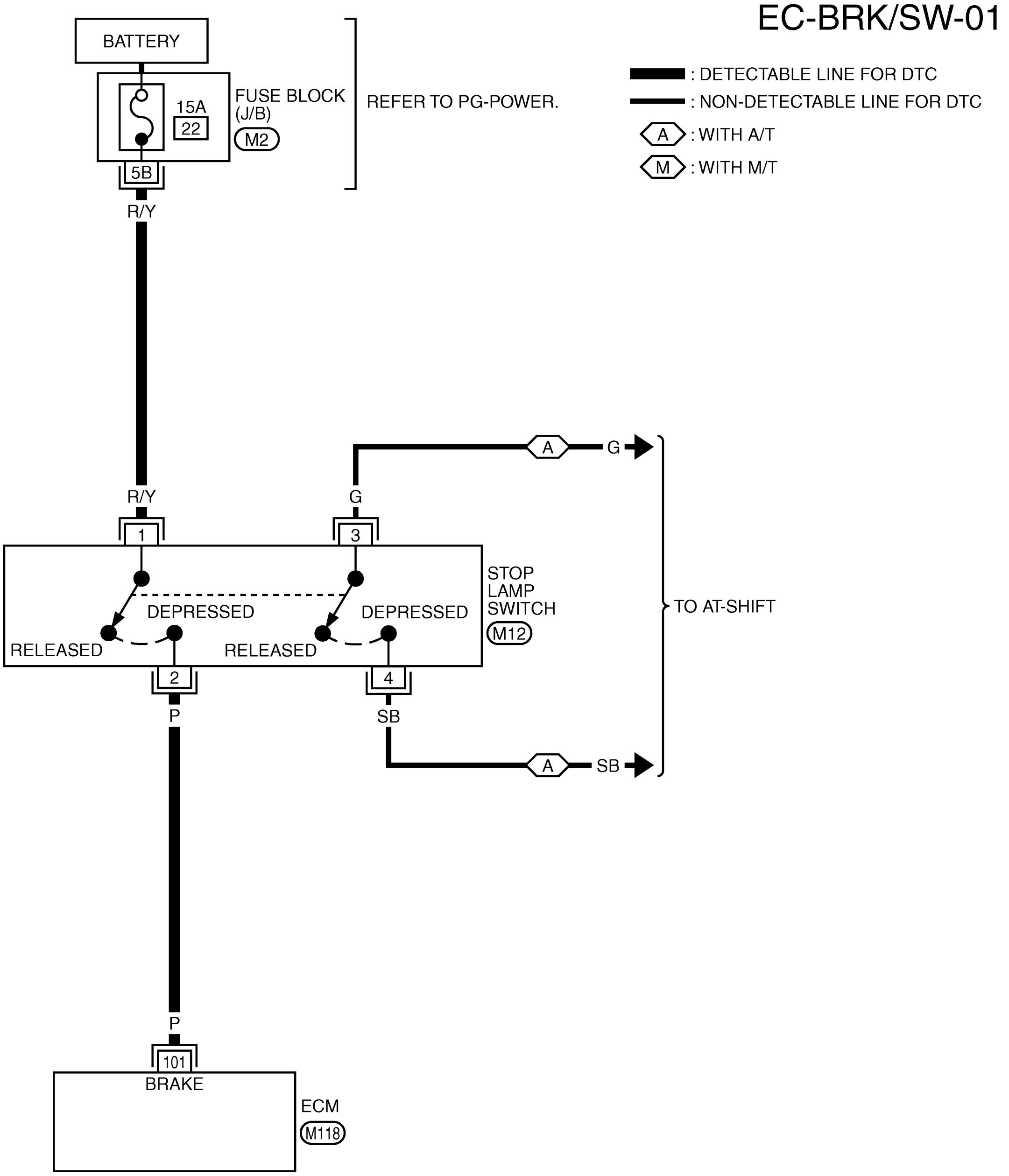

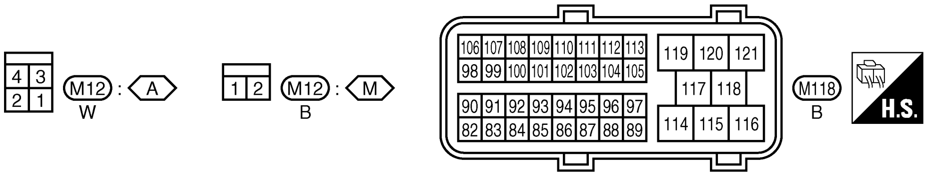

REFER TO THE FOLLOWING.
M2 -FUSE BLOCK-JUNCTION BOX (J/B)

TBWB0155E

Specification data are reference values and are measured between each terminal and ground.

CAUTION:

Do not use ECM ground terminals when measuring input/output voltage. Doing so may result in damage to the ECM's transistor. Use a ground other than ECM terminals, such as the ground.

TER-MINAL NO.	WIRE COLOR	ITEM	CONDITION	DATA (DC Voltage)
101	P	Stop lamp switch	**[Ignition switch: OFF]** ● Brake pedal: Fully released	Approximately 0V
			[Ignition switch: OFF] ● Brake pedal: Slightly depressed	BATTERY VOLTAGE (11 - 14V)

Diagnostic Procedure

ABS00D8S

1. CHECK STOP LAMP SWITCH CIRCUIT

1. Turn ignition switch OFF.
2. Check the stop lamp when depressing and releasing the brake pedal.

Brake pedal	Stop lamp
Fully released	Not illuminated
Slightly depressed	Illuminated

OK or NG

OK >> GO TO 4.
NG >> GO TO 2.

2. CHECK STOP LAMP SWITCH POWER SUPPLY CIRCUIT

1. Disconnect stop lamp switch harness connector.

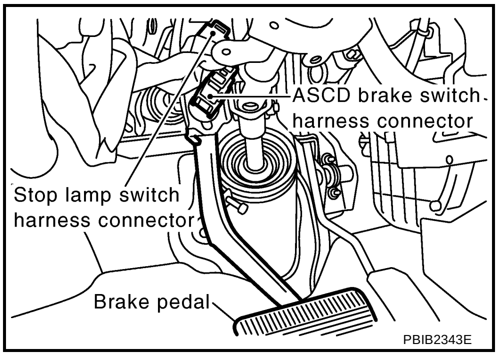

2. Check voltage between stop lamp switch terminal 1 and ground with CONSULT-II or tester.

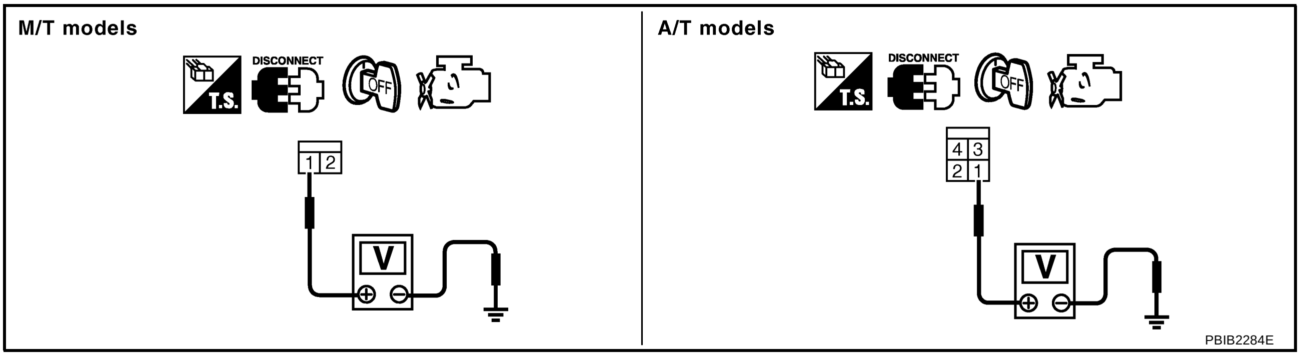

Voltage: Battery voltage

OK or NG

OK >> GO TO 4.
NG >> GO TO 3.

A
EC
C
D
E
F
G
H
I
J
K
L
M

3. DETECT MALFUNCTIONING PART

Check the following.

- 15A fuse
- Fuse block (J/B) connector M2
- Harness for open and short between stop lamp switch and battery

>> Repair open circuit or short to ground or short to power in harness or connectors.

4. CHECK STOP LAMP SWITCH INPUT SIGNAL CIRCUIT FOR OPEN AND SHORT

1. Disconnect stop lamp switch harness connector.
2. Disconnect ECM harness connector.
3. Check harness continuity between stop lamp switch terminal 2 and ECM terminal 101.
   Refer to Wiring Diagram.

   Continuity should exist.

4. Also check harness for short to ground and short to power.

OK or NG

OK >> GO TO 5.
NG >> Repair open circuit or short to ground or short to power in harness or connectors.

5. CHECK STOP LAMP SWITCH

Refer to EC-553, "Component Inspection" .

OK or NG

OK >> GO TO 6.
NG >> Replace stop lamp switch.

6. CHECK INTERMITTENT INCIDENT

Refer to EC-153, "TROUBLE DIAGNOSIS FOR INTERMITTENT INCIDENT" .

>> **INSPECTION END**

Component Inspection

ABS00CXW

STOP LAMP SWITCH

1. Disconnect stop lamp switch harness connector.

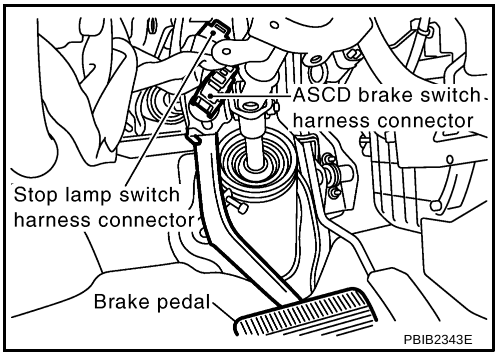

2. Check continuity between stop lamp switch terminals 1 and 2 under the following conditions.

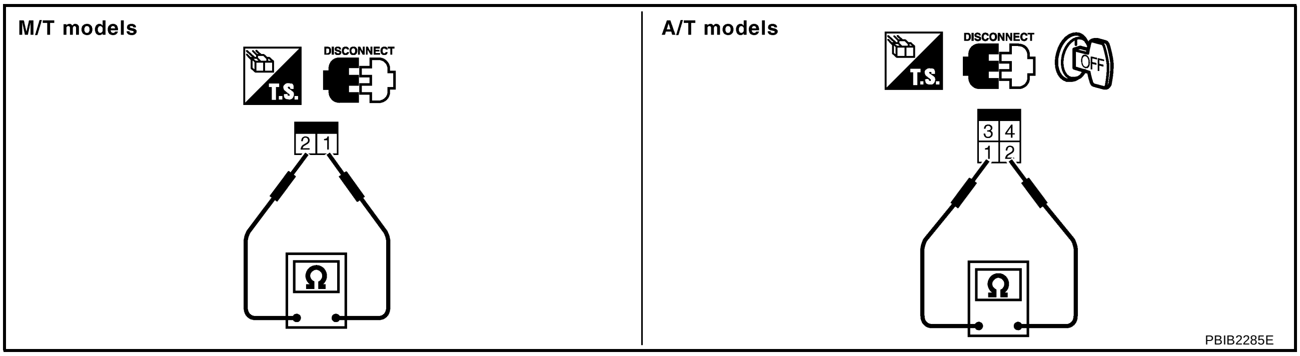

Conditions	Continuity
Brake pedal: Fully released	Should not exist.
Brake pedal: Slightly depressed	Should exist.

If NG, adjust brake pedal installation, refer to BR-6, "BRAKE PEDAL" , and perform step 2 again.

DTC P2122, P2123 APP SENSOR

PFP:18002

Component Description

ABS00CXX

The accelerator pedal position sensor is installed on the upper end of the accelerator pedal assembly. The sensor detects the accelerator position and sends a signal to the ECM.

Accelerator pedal position sensor has two sensors. These sensors are a kind of potentiometers which transform the accelerator pedal position into output voltage, and emit the voltage signal to the ECM. In addition, these sensors detect the opening and closing speed of the accelerator pedal and feed the voltage signals to the ECM. The ECM judges the current opening angle of the accelerator pedal from these signals and controls the throttle control motor based on these signals.

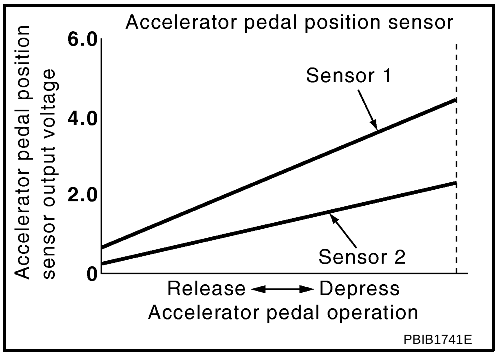

Idle position of the accelerator pedal is determined by the ECM receiving the signal from the accelerator pedal position sensor. The ECM uses this signal for the engine operation such as fuel cut.

CONSULT-II Reference Value in Data Monitor Mode

ABS00CXY

Specification data are reference values.

MONITOR ITEM	CONDITION		SPECIFICATION
ACCEL SEN 1	● Ignition switch: ON (Engine stopped)	Accelerator pedal: Fully released	0.5 - 1.0V
		Accelerator pedal: Fully depressed	4.0 - 4.7V
ACCEL SEN 2*	● Ignition switch: ON (Engine stopped)	Accelerator pedal: Fully released	0.3 - 1.2V
		Accelerator pedal: Fully depressed	3.9 - 4.8V
CLSD THL POS	● Ignition switch: ON (Engine stopped)	Accelerator pedal: Fully released	ON
		Accelerator pedal: Slightly depressed	OFF

*: Accelerator pedal position sensor 2 signal is converted by ECM internally. Thus, they differs from ECM terminal voltage signal.

On Board Diagnosis Logic

ABS00CXZ

These self-diagnoses have the one trip detection logic.

NOTE:
If DTC P2122 or P2123 is displayed with DTC P1229, first perform the trouble diagnosis for DTC P1229. Refer to EC-499 .

DTC No.	Trouble diagnosis name	DTC detecting condition	Possible cause
P2122 2122	Accelerator pedal position sensor 1 circuit low input	An excessively low voltage from the APP sensor 1 is sent to ECM.	● Harness or connectors (The APP sensor 1 circuit is open or shorted.) ● Accelerator pedal position sensor (Accelerator pedal position sensor 1)
P2123 2123	Accelerator pedal position sensor 1 circuit high input	An excessively high voltage from the APP sensor 1 is sent to ECM.	

FAIL-SAFE MODE

When the malfunction is detected, the ECM enters fail-safe mode and the MIL lights up.

Engine operating condition in fail-safe mode
The ECM controls the electric throttle control actuator in regulating the throttle opening in order for the idle position to be within +10 degrees. The ECM regulates the opening speed of the throttle valve to be slower than the normal condition. So, the acceleration will be poor.

DTC Confirmation Procedure

ABS00CY0

NOTE:

If DTC Confirmation Procedure has been previously conducted, always turn ignition switch OFF and wait at least 10 seconds before conducting the next test.

TESTING CONDITION:

Before performing the following procedure, confirm that battery voltage is more than 10V at idle.

WITH CONSULT-II

1. Turn ignition switch ON.
2. Select “DATA MONITOR” mode with CONSULT-II.
3. Start engine and let it idle for 1 second.
4. If DTC is detected, go to EC-559, "Diagnostic Procedure" .

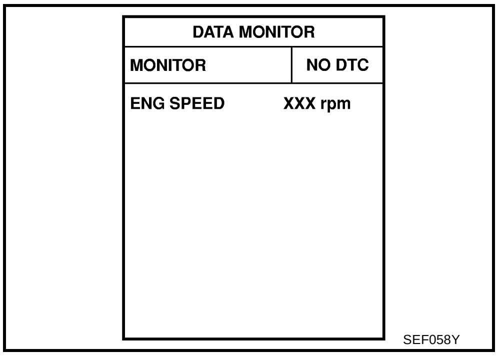

SEF058Y

WITH GST

Follow the procedure “WITH CONSULT-II” above.

Wiring Diagram

ABS00CY1

EC-APPS1-01

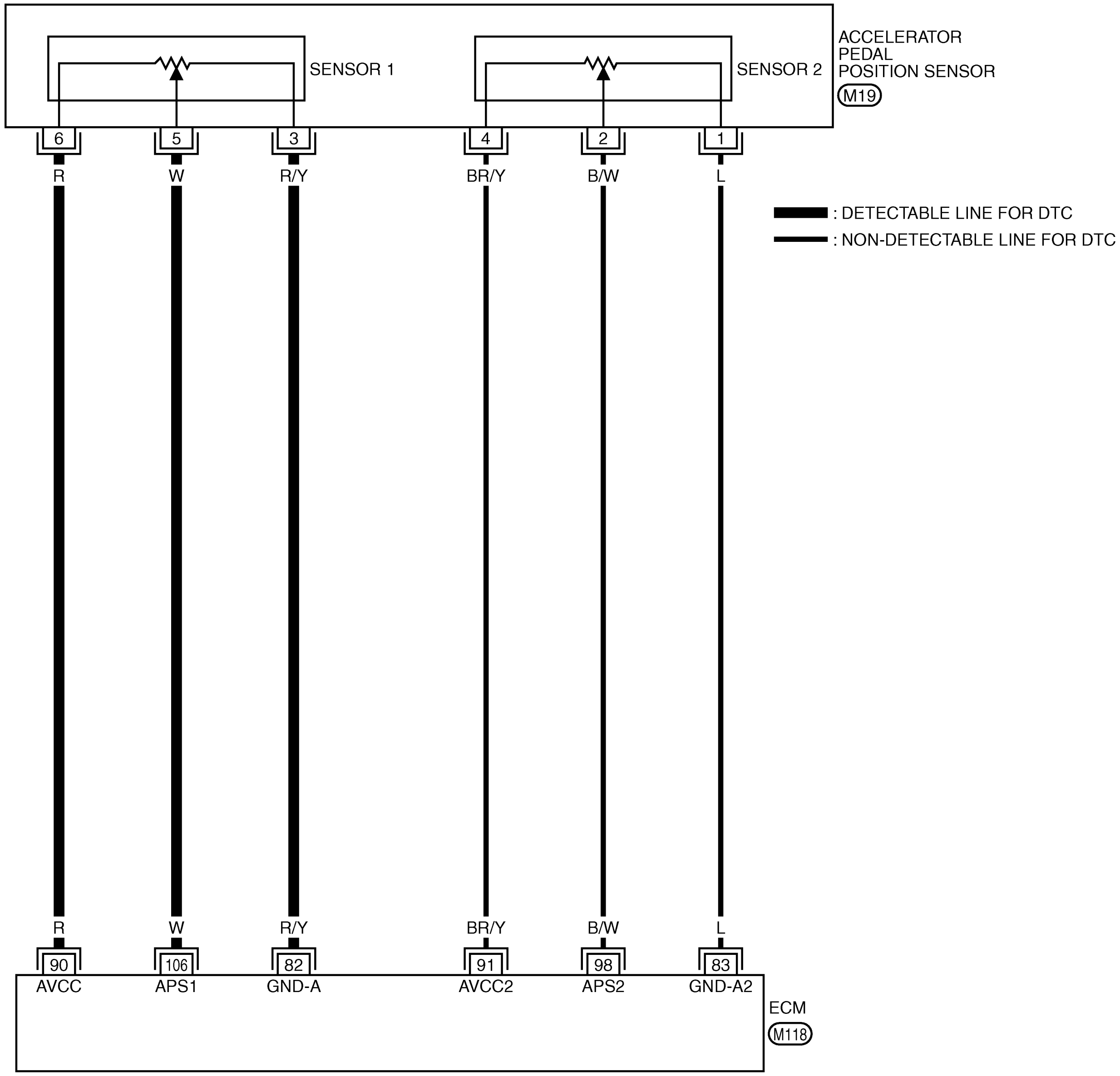

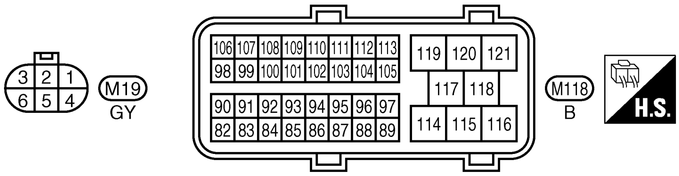

TBWA0624E

A EC C D E F G H I J K L M

Specification data are reference values and are measured between each terminal and ground.

CAUTION:

Do not use ECM ground terminals when measuring input/output voltage. Doing so may result in damage to the ECM's transistor. Use a ground other than ECM terminals, such as the ground.

TERMINAL NO.	WIRE COLOR	ITEM	CONDITION	DATA (DC Voltage)
82	R/Y	Sensor ground (Accelerator pedal position sensor 1)	**[Engine is running]** ● **Warm-up condition** ● Idle speed	Approximately 0V
83	L	Sensor ground (Accelerator pedal position sensor 2)	**[Engine is running]** ● **Warm-up condition** ● Idle speed	Approximately 0V
90	R	Sensor power supply (Accelerator pedal position sensor 1)	**[Ignition switch: ON]**	Approximately 5V
91	BR/Y	Sensor power supply (Accelerator pedal position sensor 2)	**[Ignition switch: ON]**	Approximately 5V
98	B/W	Accelerator pedal position sensor 2	**[Ignition switch: ON]** ● Engine stopped ● Accelerator pedal: Fully released	0.15 - 0.6V
			[Ignition switch: ON] ● Engine stopped ● Accelerator pedal: Fully depressed	1.95 - 2.4V
106	W	Accelerator pedal position sensor 1	**[Ignition switch: ON]** ● Engine stopped ● Accelerator pedal: Fully released	0.5 - 1.0V
			[Ignition switch: ON] ● Engine stopped ● Accelerator pedal: Fully depressed	3.9 - 4.7V

Diagnostic Procedure

ABS00D8T

1. CHECK GROUND CONNECTIONS

1. Turn ignition switch OFF.
2. Loosen and retighten three ground screws on the body.
   Refer to EC-161, "Ground Inspection" .

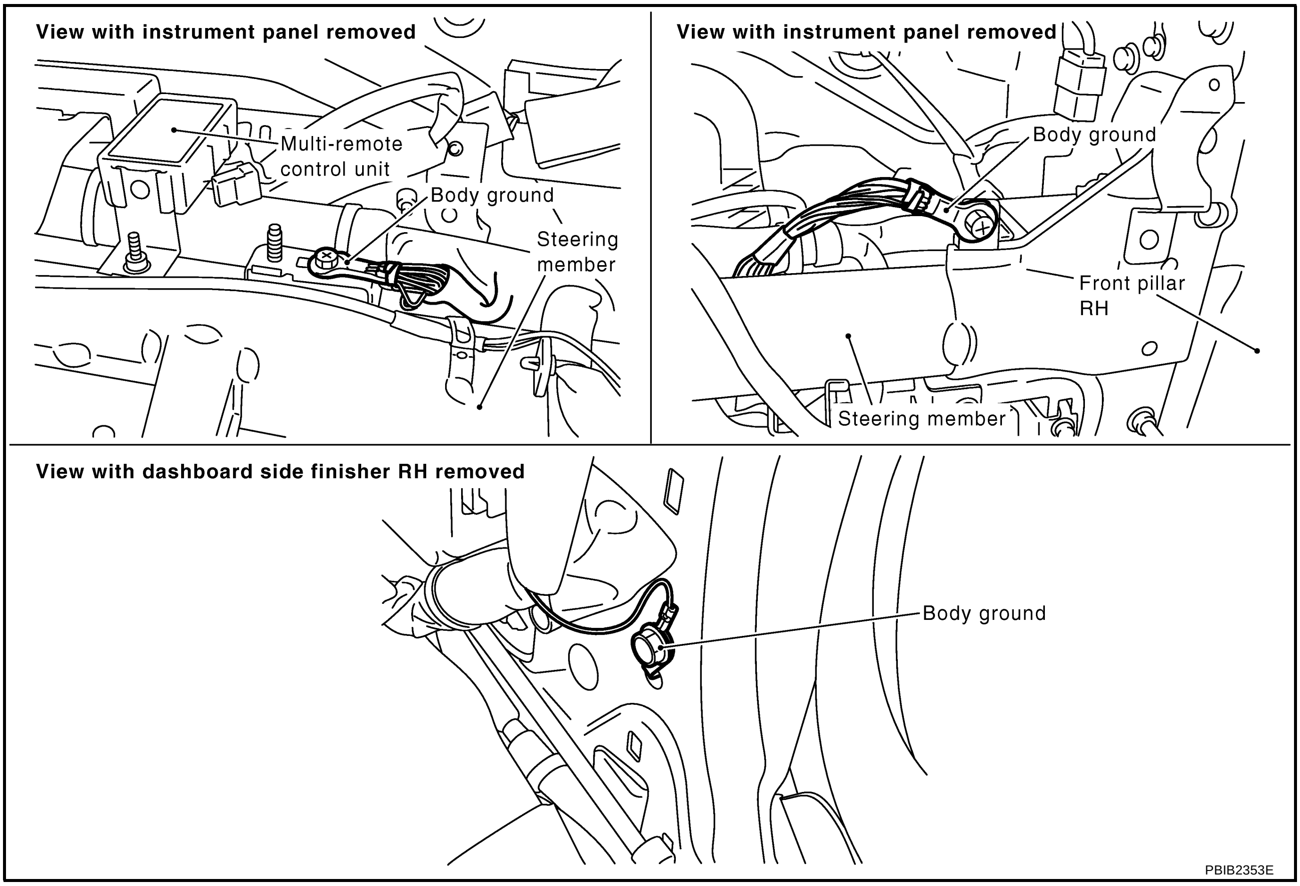

OK or NG

OK >> GO TO 2.
NG >> Repair or replace ground connections.

2. CHECK APP SENSOR 1 POWER SUPPLY CIRCUIT

1. Disconnect accelerator pedal position (APP) sensor harness connector.
2. Turn ignition switch ON.

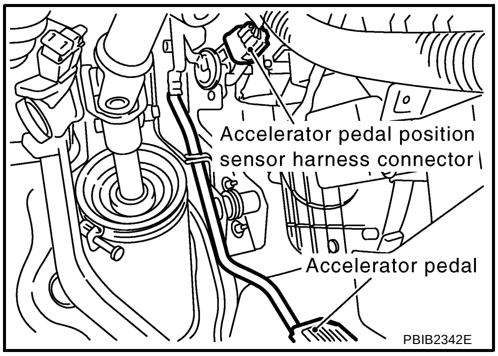

3. Check voltage between APP sensor terminal 6 and ground with CONSULT-II or tester.

Voltage: Approximately 5V

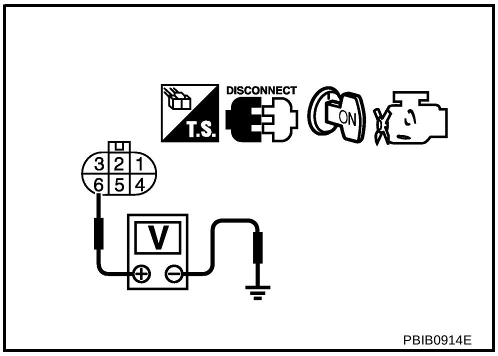

OK or NG

OK >> GO TO 3.

NG >> Repair open circuit or short to ground or short to power in harness or connectors.

3. CHECK APP SENSOR 1 GROUND CIRCUIT FOR OPEN AND SHORT

1. Turn ignition switch OFF.
2. Disconnect ECM harness connector.
3. Check harness continuity between APP sensor terminal 3 and ECM terminal 82. Refer to Wiring Diagram.

   Continuity should exist.

4. Also check harness for short to ground and short to power.

OK or NG

OK >> GO TO 4.

NG >> Repair open circuit or short to ground or short to power in harness or connectors.

4. CHECK APP SENSOR 1 INPUT SIGNAL CIRCUIT FOR OPEN AND SHORT

1. Check harness continuity between APP sensor terminal 5 and ECM terminal 106. Refer to Wiring Diagram.

   Continuity should exist.

2. Also check harness for short to ground and short to power.

OK or NG

OK >> GO TO 5.

NG >> Repair open circuit or short to ground or short to power in harness or connectors.

5. CHECK APP SENSOR

Refer to EC-561, "Component Inspection" .

OK or NG

OK >> GO TO 7.

NG >> GO TO 6.

A
EC
C
D
E
F
G
H
I
J
K
L
M

6. REPLACE ACCELERATOR PEDAL ASSEMBLY

1. Replace the accelerator pedal assembly.
2. Perform EC-88, "Accelerator Pedal Released Position Learning" .
3. Perform EC-88, "Throttle Valve Closed Position Learning" .
4. Perform EC-88, "Idle Air Volume Learning" .

>> **INSPECTION END**

7. CHECK INTERMITTENT INCIDENT

Refer to EC-153, "TROUBLE DIAGNOSIS FOR INTERMITTENT INCIDENT" .

>> **INSPECTION END**

Component Inspection

ABS00CY3

ACCELERATOR PEDAL POSITION SENSOR

1. Reconnect all harness connectors disconnected.
2. Turn ignition switch ON.
3. Check voltage between ECM terminals 106 (APP sensor 1 signal), 98 (APP sensor 2 signal) and ground under the following conditions.

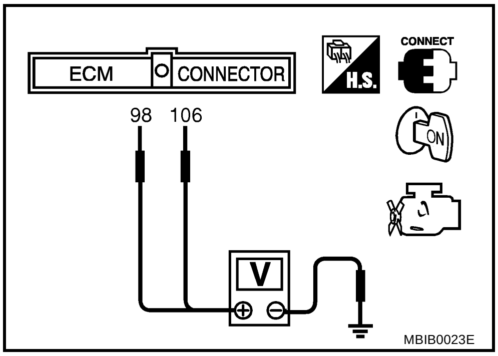

Terminal	Accelerator pedal	Voltage
106 (Accelerator pedal position sensor 1)	Fully released	0.5 - 1.0V
	Fully depressed	3.9 - 4.7V
98 (Accelerator pedal position sensor 2)	Fully released	0.15 - 0.6V
	Fully depressed	1.95 - 2.4V

4. If NG, replace accelerator pedal assembly and go to the next step.
5. Perform EC-88, "Accelerator Pedal Released Position Learning" .
6. Perform EC-88, "Throttle Valve Closed Position Learning" .
7. Perform EC-88, "Idle Air Volume Learning" .

Removal and Installation

ABS00CY4

ACCELERATOR PEDAL

Refer to ACC-3, "ACCELERATOR CONTROL SYSTEM" .

DTC P2127, P2128 APP SENSOR

PFP:18002

Component Description

ABS00CY5

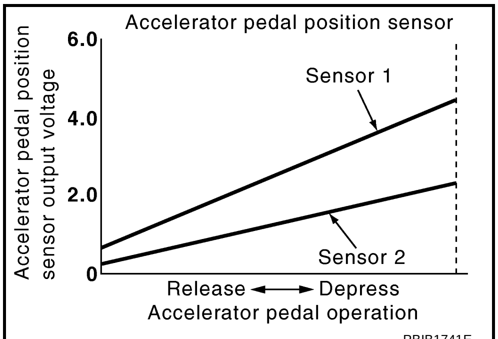

PBIB1741E

The accelerator pedal position sensor is installed on the upper end of the accelerator pedal assembly. The sensor detects the accelerator position and sends a signal to the ECM.

Accelerator pedal position sensor has two sensors. These sensors are a kind of potentiometers which transform the accelerator pedal position into output voltage, and emit the voltage signal to the ECM. In addition, these sensors detect the opening and closing speed of the accelerator pedal and feed the voltage signals to the ECM. The ECM judges the current opening angle of the accelerator pedal from these signals and controls the throttle control motor based on these signals.

Idle position of the accelerator pedal is determined by the ECM receiving the signal from the accelerator pedal position sensor. The ECM uses this signal for the engine operation such as fuel cut.

CONSULT-II Reference Value in Data Monitor Mode

ABS00CY6

Specification data are reference values.

MONITOR ITEM	CONDITION		SPECIFICATION
ACCEL SEN 1	● Ignition switch: ON (Engine stopped)	Accelerator pedal: Fully released	0.5 - 1.0V
		Accelerator pedal: Fully depressed	4.0 - 4.7V
ACCEL SEN 2*	● Ignition switch: ON (Engine stopped)	Accelerator pedal: Fully released	0.3 - 1.2V
		Accelerator pedal: Fully depressed	3.9 - 4.8V
CLSD THL POS	● Ignition switch: ON (Engine stopped)	Accelerator pedal: Fully released	ON
		Accelerator pedal: Slightly depressed	OFF

*: Accelerator pedal position sensor 2 signal is converted by ECM internally. Thus, they differs from ECM terminal voltage signal.

On Board Diagnosis Logic

ABS00CY7

These self-diagnoses have the one trip detection logic.

DTC No.	Trouble diagnosis name	DTC detecting condition	Possible cause
P2127 2127	Accelerator pedal position sensor 2 circuit low input	An excessively low voltage from the APP sensor 2 is sent to ECM.	● Harness or connectors (The APP sensor 2 circuit is open or shorted.) (The TP sensor circuit is shorted.) ● Accelerator pedal position sensor (Accelerator pedal position sensor 2) ● Electric throttle control actuator (TP sensor 1 and 2)
P2128 2128	Accelerator pedal position sensor 2 circuit high input	An excessively high voltage from the APP sensor 2 is sent to ECM.	

FAIL-SAFE MODE

When the malfunction is detected, the ECM enters fail-safe mode and the MIL lights up.

Engine operating condition in fail-safe mode
The ECM controls the electric throttle control actuator in regulating the throttle opening in order for the idle position to be within +10 degrees. The ECM regulates the opening speed of the throttle valve to be slower than the normal condition. So, the acceleration will be poor.

DTC Confirmation Procedure

ABS00CY8

NOTE:

If DTC Confirmation Procedure has been previously conducted, always turn ignition switch OFF and wait at least 10 seconds before conducting the next test.

TESTING CONDITION:

Before performing the following procedure, confirm that battery voltage is more than 10V at idle.

WITH CONSULT-II

1. Turn ignition switch ON.
2. Select “DATA MONITOR” mode with CONSULT-II.
3. Start engine and let it idle for 1 second.
4. If DTC is detected, go to EC-566, "Diagnostic Procedure" .

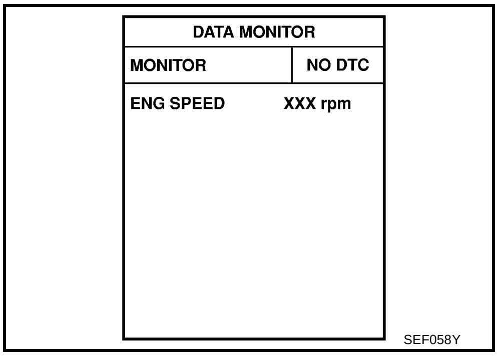

SEF058Y

WITH GST

Follow the procedure “WITH CONSULT-II” above.

A
EC
C
D
E
F
G
H
I
J
K
L
M

Wiring Diagram

ABS00CY9

EC-APPS2-01

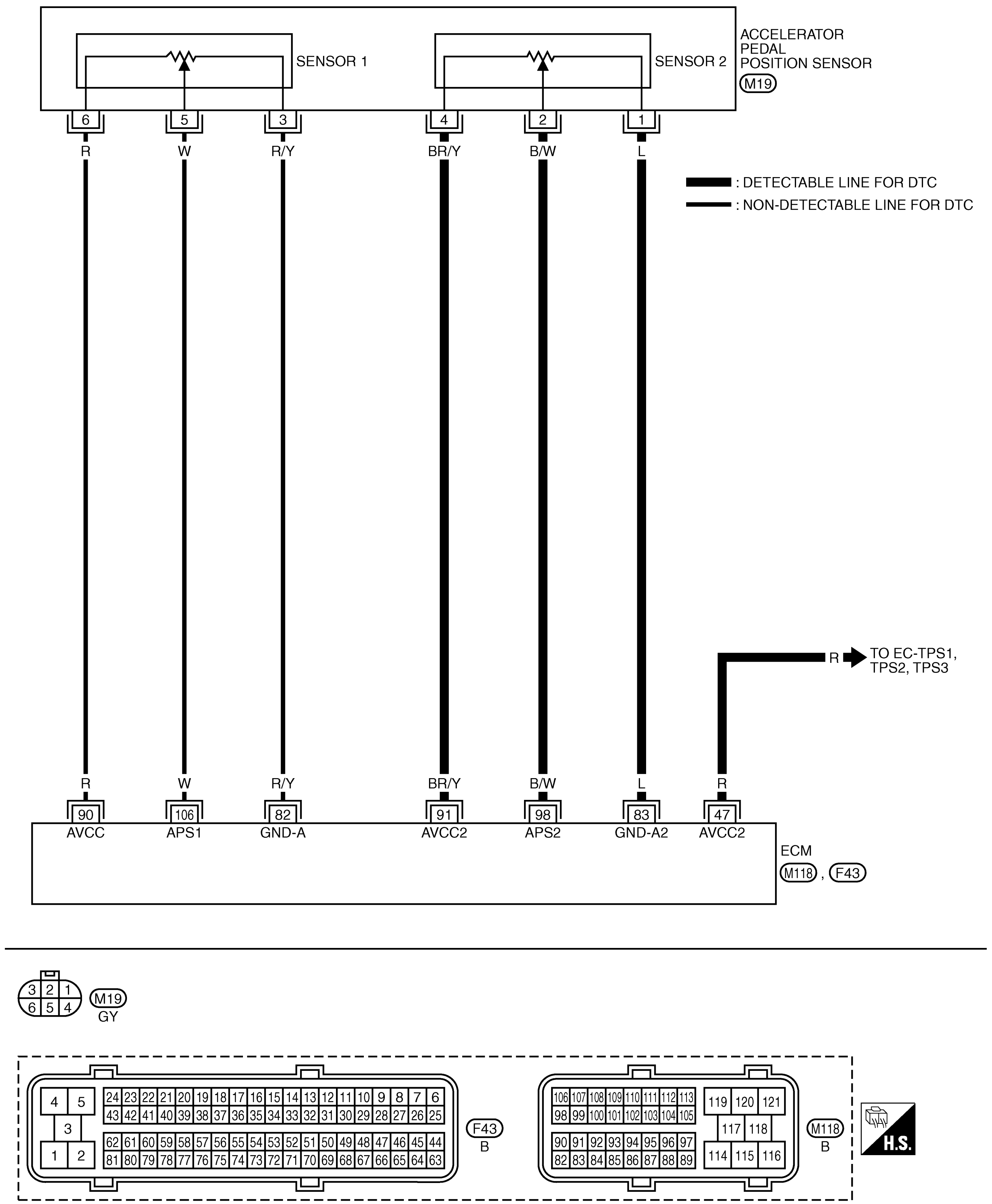

TBWB0087E

Specification data are reference values and are measured between each terminal and ground.

CAUTION:

Do not use ECM ground terminals when measuring input/output voltage. Doing so may result in damage to the ECM's transistor. Use a ground other than ECM terminals, such as the ground.

TERMINAL NO.	WIRE COLOR	ITEM	CONDITION	DATA (DC Voltage)
47	R	Sensor power supply (Throttle position sensor)	**[Ignition switch: ON]**	Approximately 5V
82	R/Y	Sensor ground (Accelerator pedal position sensor 1)	**[Engine is running]** ● **Warm-up condition** ● Idle speed	Approximately 0V
83	L	Sensor ground (Accelerator pedal position sensor 2)	**[Engine is running]** ● **Warm-up condition** ● Idle speed	Approximately 0V
90	R	Sensor power supply (Accelerator pedal position sensor 1)	**[Ignition switch: ON]**	Approximately 5V
91	BR/Y	Sensor power supply (Accelerator pedal position sensor 2)	**[Ignition switch: ON]**	Approximately 5V
98	B/W	Accelerator pedal position sensor 2	**[Ignition switch: ON]** ● Engine stopped ● Accelerator pedal: Fully released	0.15 - 0.6V
			[Ignition switch: ON] ● Engine stopped ● Accelerator pedal: Fully depressed	1.95 - 2.4V
106	W	Accelerator pedal position sensor 1	**[Ignition switch: ON]** ● Engine stopped ● Accelerator pedal: Fully released	0.5 - 1.0V
			[Ignition switch: ON] ● Engine stopped ● Accelerator pedal: Fully depressed	3.9 - 4.7V

Diagnostic Procedure

ABS00D8U

1. CHECK GROUND CONNECTIONS

1. Turn ignition switch OFF.
2. Loosen and retighten three ground screws on the body.
   Refer to EC-161, "Ground Inspection" .

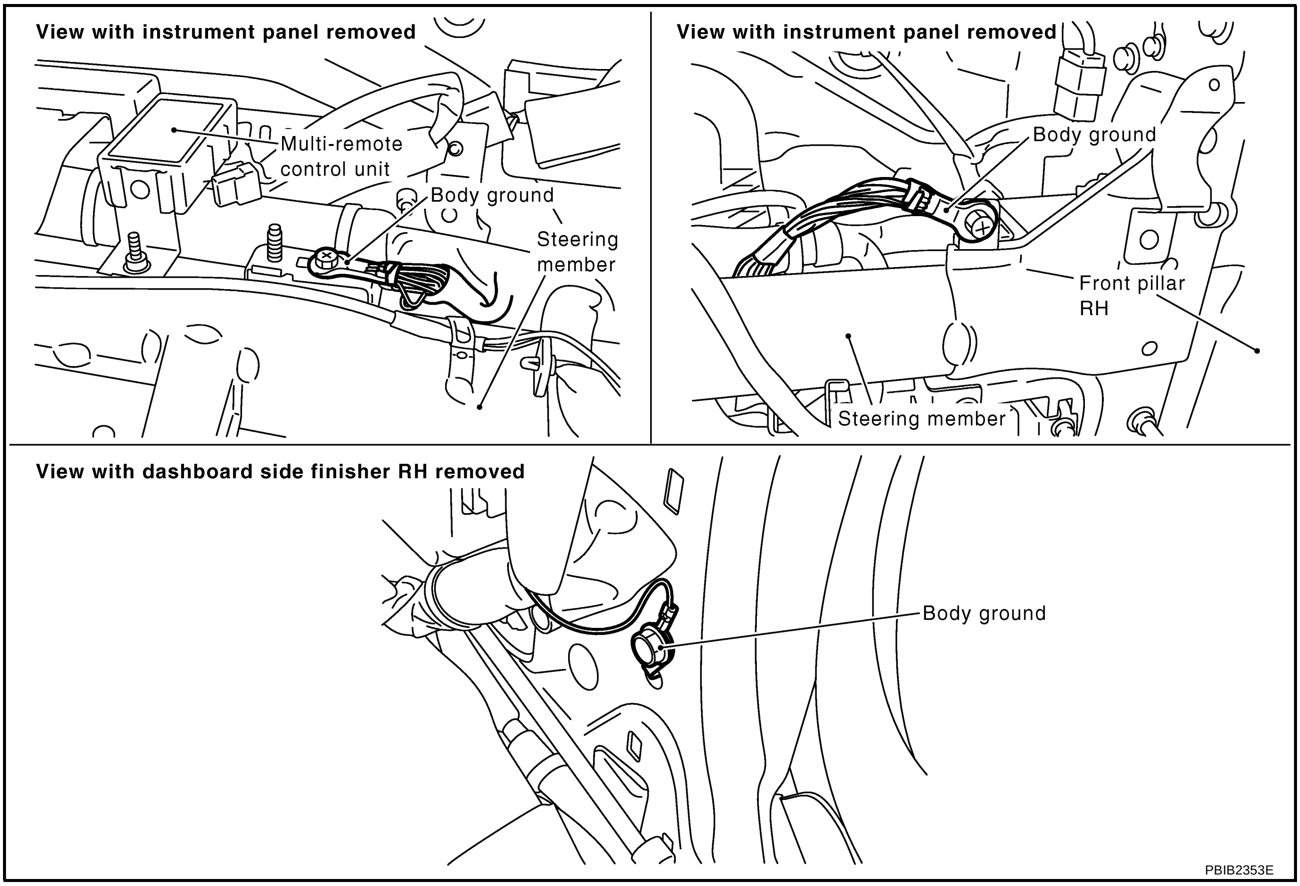

OK or NG

OK >> GO TO 2.
NG >> Repair or replace ground connections.

2. CHECK APP SENSOR 2 POWER SUPPLY CIRCUIT-I

1. Disconnect accelerator pedal position (APP) sensor harness connector.
2. Turn ignition switch ON.

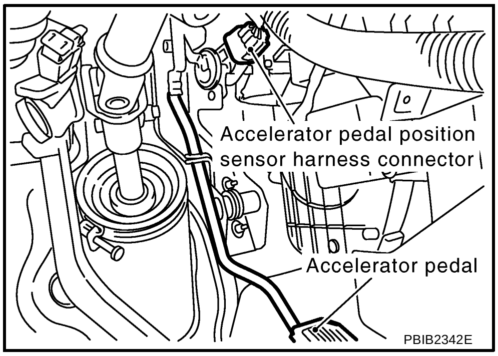

3. Check voltage between APP sensor terminal 4 and ground with CONSULT-II or tester.

Voltage: Approximately 5V

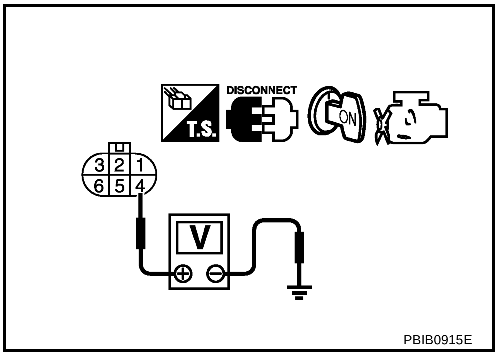

OK or NG

OK >> GO TO 7.
NG >> GO TO 3.

3. CHECK APP SENSOR 2 POWER SUPPLY CIRCUIT-II

1. Turn ignition switch OFF.
2. Disconnect ECM harness connector.
3. Check harness continuity between APP sensor terminal 4 and ECM terminal 91. Refer to Wiring Diagram.

Continuity should exist.

OK or NG

OK >> GO TO 4.
NG >> Repair or replace open circuit.

4. CHECK APP SENSOR 2 POWER SUPPLY CIRCUIT-III

Check harness for short to power and short to ground, between the following terminals.

ECM terminal	Sensor terminal	Reference Wiring Diagram
47	Electric throttle control actuator terminal 1	EC-572
91	APP sensor terminal 4	EC-564

OK or NG

OK >> GO TO 5.
NG >> Repair short to ground or short to power in harness or connectors.

5. CHECK THROTTLE POSITION SENSOR

Refer to EC-577, "Component Inspection" .

OK or NG

OK >> GO TO 11.
NG >> GO TO 6.

6. REPLACE ELECTRIC THROTTLE CONTROL ACTUATOR

1. Replace the electric throttle control actuator.
2. Perform EC-88, "Throttle Valve Closed Position Learning" .
3. Perform EC-88, "Idle Air Volume Learning" .

>> **INSPECTION END**

7. CHECK APP SENSOR 2 GROUND CIRCUIT FOR OPEN AND SHORT

1. Turn ignition switch OFF.
2. Disconnect ECM harness connector.
3. Check harness continuity between APP sensor terminal 1 and ECM terminal 83.
   Refer to Wiring Diagram.

   Continuity should exist.

4. Also check harness for short to ground and short to power.

OK or NG

OK >> GO TO 8.
NG >> Repair open circuit or short to ground or short to power in harness or connectors.

8. CHECK APP SENSOR 2 INPUT SIGNAL CIRCUIT FOR OPEN AND SHORT

1. Check harness continuity between APP sensor terminal 2 and ECM terminal 98.
   Refer to Wiring Diagram.

   Continuity should exist.

2. Also check harness for short to ground and short to power.

OK or NG

OK >> GO TO 9.
NG >> Repair open circuit or short to ground or short to power in harness or connectors.

9. CHECK APP SENSOR

Refer to EC-569, "Component Inspection" .

OK or NG

OK >> GO TO 11.
NG >> GO TO 10.

10. REPLACE ACCELERATOR PEDAL ASSEMBLY

1. Replace the accelerator pedal assembly.
2. Perform EC-88, "Accelerator Pedal Released Position Learning" .
3. Perform EC-88, "Throttle Valve Closed Position Learning" .
4. Perform EC-88, "Idle Air Volume Learning" .

>> **INSPECTION END**

11. CHECK INTERMITTENT INCIDENT

Refer to EC-153, "TROUBLE DIAGNOSIS FOR INTERMITTENT INCIDENT" .

>> **INSPECTION END**

Component Inspection

ABS00CYB

ACCELERATOR PEDAL POSITION SENSOR

1. Reconnect all harness connectors disconnected.
2. Turn ignition switch ON.
3. Check voltage between ECM terminals 106 (APP sensor 1 signal), 98 (APP sensor 2 signal) and ground under the following conditions.

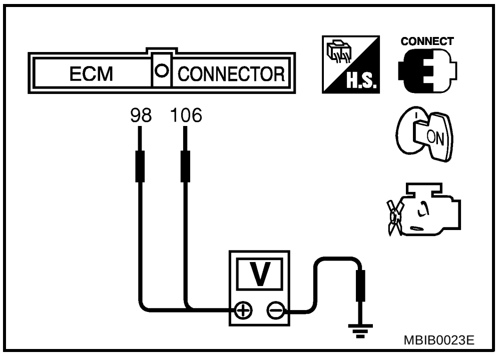

Terminal	Accelerator pedal	Voltage
106 (Accelerator pedal position sensor 1)	Fully released	0.5 - 1.0V
	Fully depressed	3.9 - 4.7V
98 (Accelerator pedal position sensor 2)	Fully released	0.15 - 0.6V
	Fully depressed	1.95 - 2.4V

4. If NG, replace accelerator pedal assembly and go to the next step.
5. Perform EC-88, "Accelerator Pedal Released Position Learning" .
6. Perform EC-88, "Throttle Valve Closed Position Learning" .
7. Perform EC-88, "Idle Air Volume Learning" .

Remove and Installation

ABS00CYC

ACCELERATOR PEDAL

Refer to ACC-3, "ACCELERATOR CONTROL SYSTEM" .

DTC P2135 TP SENSOR

PFP:16119

Component Description

ABS00CYD

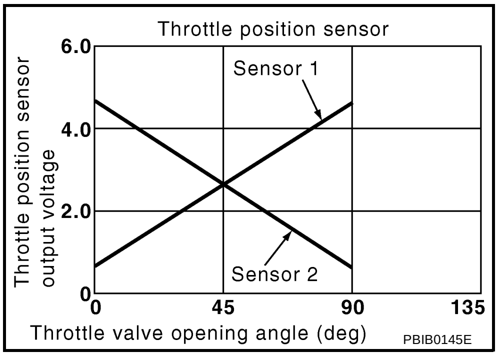

Electric throttle control actuator consists of throttle control motor, throttle position sensor, etc. The throttle position sensor responds to the throttle valve movement.
The throttle position sensor has two sensors. These sensors are a kind of potentiometers which transform the throttle valve position into output voltage, and emit the voltage signal to the ECM. In addition, these sensors detect the opening and closing speed of the throttle valve and feed the voltage signals to the ECM. The ECM judges the current opening angle of the throttle valve from these signals and the ECM controls the throttle control motor to make the throttle valve opening angle properly in response to driving condition.

CONSULT-II Reference Value in Data Monitor Mode

ABS00CYE

Specification data are reference values.

MONITOR ITEM	CONDITION		SPECIFICATION
THRTL SEN 1 THRTL SEN 2*	● Ignition switch: ON (Engine stopped) ● Shift lever: D (A/T), 1ST (M/T)	Accelerator pedal: Fully released	More than 0.36V
		Accelerator pedal: Fully depressed	Less than 4.75V

*: Throttle position sensor 2 signal is converted by ECM internally. Thus, they differs from ECM terminal voltage signal.

On Board Diagnosis Logic

ABS00CYF

This self-diagnosis has the one trip detection logic.

DTC No.	Trouble diagnosis name	DTC detecting condition	Possible cause
P2135 2135	Throttle position sensor circuit range/performance problem	Rationally incorrect voltage is sent to ECM compared with the signals from TP sensor 1 and TP sensor 2.	● Harness or connector (The TP sensor 1 and 2 circuit is open or shorted.) (The APP sensor 2 circuit is shorted.) ● Electric throttle control actuator (TP sensor 1 and 2) ● Accelerator pedal position sensor (APP sensor 2)

FAIL-SAFE MODE

When the malfunction is detected, the ECM enters fail-safe mode and the MIL lights up.

Engine operation condition in fail-safe mode
The ECM controls the electric throttle control actuator in regulating the throttle opening in order for the idle position to be within +10 degrees. The ECM regulates the opening speed of the throttle valve to be slower than the normal condition. So, the acceleration will be poor.

DTC Confirmation Procedure

ABS00CYG

NOTE:
If DTC Confirmation Procedure has been previously conducted, always turn ignition switch OFF and wait at least 10 seconds before conducting the next test.
TESTING CONDITION:
Before performing the following procedure, confirm that battery voltage is more than 10V at idle.

WITH CONSULT-II

1. Turn ignition switch ON.

2. Select “DATA MONITOR” mode with CONSULT-II.
3. Start engine and let it idle for 1 second.
4. If DTC is detected, go to EC-574, "Diagnostic Procedure" .

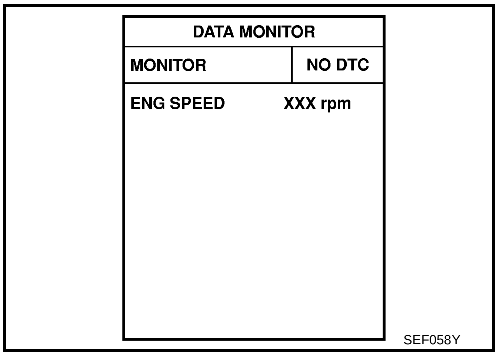

WITH GST

Follow the procedure “WITH CONSULT-II” above.

Wiring Diagram

ABS00CYH

EC-TPS3-01

: DETECTABLE LINE FOR DTC
: NON-DETECTABLE LINE FOR DTC

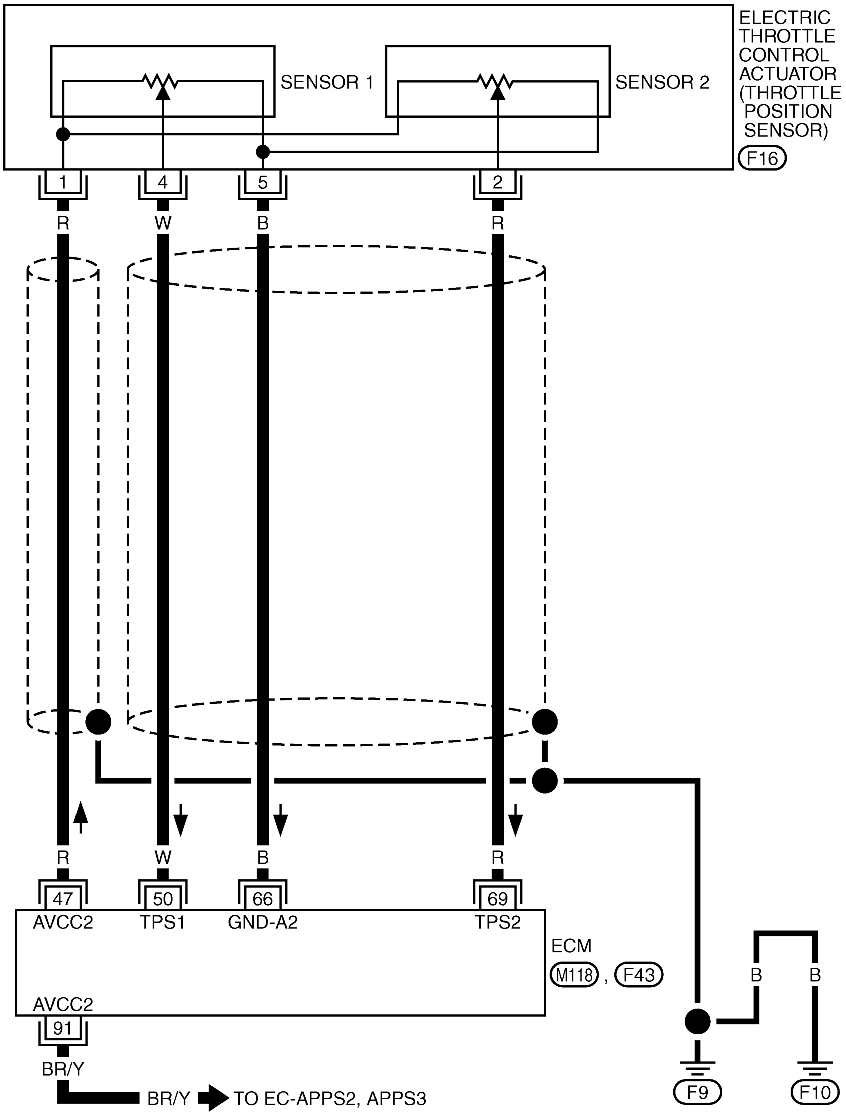

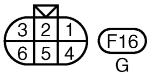

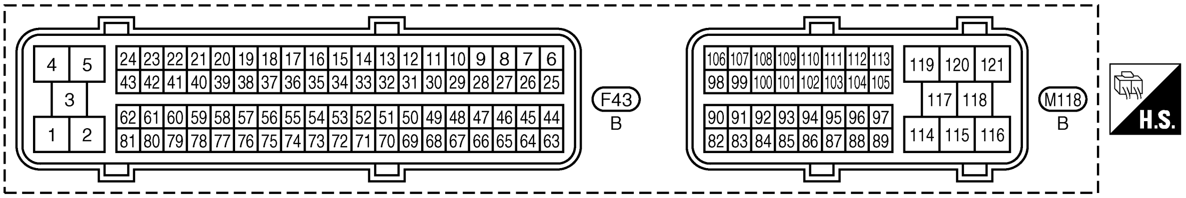

TBWB0132E

Specification data are reference values and are measured between each terminal and ground.

CAUTION:

Do not use ECM ground terminals when measuring input/output voltage. Doing so may result in damage to the ECM's transistor. Use a ground other than ECM terminals, such as the ground.

TERMINAL NO.	WIRE COLOR	ITEM	CONDITION	DATA (DC Voltage)
47	R	Sensor power supply (Throttle position sensor)	**[Ignition switch: ON]**	Approximately 5V
50	W	Throttle position sensor 1	**[Ignition switch: ON]** ● Engine stopped ● Shift lever: D (A/T), 1ST (M/T) ● Accelerator pedal: Fully released	More than 0.36V
			[Ignition switch: ON] ● Engine stopped ● Shift lever: D (A/T), 1ST (M/T) ● Accelerator pedal: Fully depressed	Less than 4.75V
66	B	Sensor ground (Throttle position sensor)	**[Engine is running]** ● **Warm-up condition** ● Idle speed	Approximately 0V
69	R	Throttle position sensor 2	**[Ignition switch: ON]** ● Engine stopped ● Shift lever: D (A/T), 1ST (M/T) ● Accelerator pedal: Fully released	Less than 4.75V
			[Ignition switch: ON] ● Engine stopped ● Shift lever: D (A/T), 1ST (M/T) ● Accelerator pedal: Fully depressed	More than 0.36V
91	BR/Y	Sensor power supply (Accelerator pedal position sensor 2)	**[Ignition switch: ON]**	Approximately 5V

Diagnostic Procedure

ABS00D8V

1. CHECK GROUND CONNECTIONS

1. Turn ignition switch OFF.
2. Loosen and retighten three ground screws on the body.
   Refer to EC-161, "Ground Inspection" .

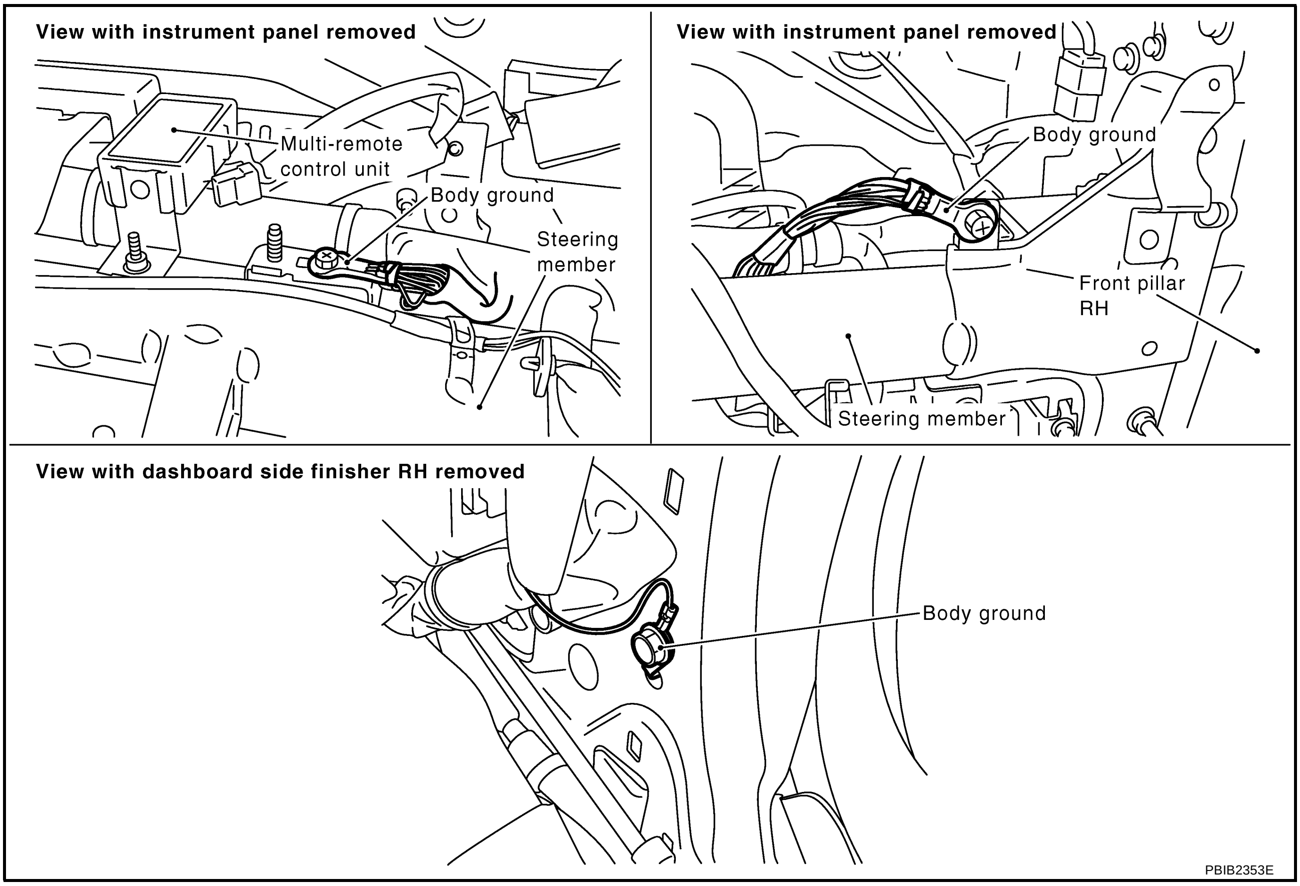

OK or NG

OK >> GO TO 2.

NG >> Repair or replace ground connections.

2. CHECK THROTTLE POSITION SENSOR POWER SUPPLY CIRCUIT-I

1. Disconnect electric throttle control actuator harness connector.
2. Turn ignition switch ON.

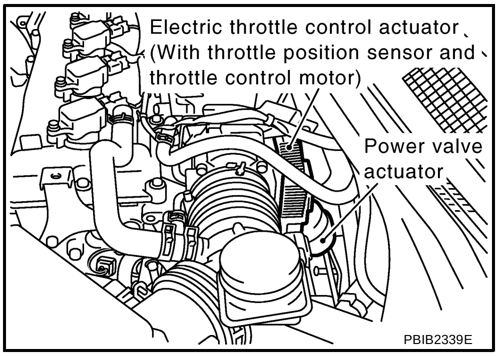

3. Check voltage between electric throttle control actuator terminal 1 and ground with CONSULT-II or tester.

Voltage: Approximately 5V

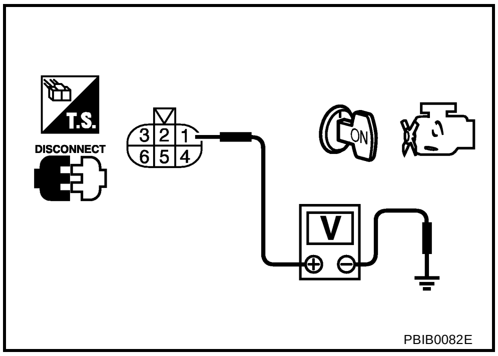

OK or NG

OK >> GO TO 7.
NG >> GO TO 3.

3. CHECK THROTTLE POSITION SENSOR POWER SUPPLY CIRCUIT-II

1. Turn ignition switch OFF.
2. Disconnect ECM harness connector.
3. Check harness continuity between electric throttle control actuator terminal 1 and ECM terminal 47. Refer to Wiring Diagram.

Continuity should exist.

OK or NG

OK >> GO TO 4.
NG >> Repair or replace open circuit.

4. CHECK THROTTLE POSITION SENSOR POWER SUPPLY CIRCUIT-III

Check harness for short to power and short to ground, between the following terminals.

ECM terminal	Sensor terminal	Reference Wiring Diagram
47	Electric throttle control actuator terminal 1	EC-572
91	APP sensor terminal 4	EC-564

OK or NG

OK >> GO TO 5.
NG >> Repair short to ground or short to power in harness or connectors.

5. CHECK APP SENSOR

Refer to EC-569, "Component Inspection" .

OK or NG

OK >> GO TO 11
NG >> GO TO 6.

6. REPLACE ACCELERATOR PEDAL ASSEMBLY

1. Replace accelerator pedal assembly.
2. Perform EC-88, "Accelerator Pedal Released Position Learning" .
3. Perform EC-88, "Throttle Valve Closed Position Learning" .
4. Perform EC-88, "Idle Air Volume Learning" .

>> **INSPECTION END**

7. CHECK THROTTLE POSITION SENSOR GROUND CIRCUIT FOR OPEN AND SHORT

1. Turn ignition switch OFF.
2. Disconnect ECM harness connector.
3. Check harness continuity between electric throttle control actuator terminal 5 and ECM terminal 66. Refer to Wiring Diagram.

Continuity should exist.

4. Also check harness for short to ground and short to power.

OK or NG

OK >> GO TO 8.
NG >> Repair open circuit or short to ground or short to power in harness or connectors.

8. CHECK THROTTLE POSITION SENSOR INPUT SIGNAL CIRCUIT FOR OPEN AND SHORT

1. Check harness continuity between the following;
electric throttle control actuator terminal 4 and ECM terminal 50,
electric throttle control actuator terminal 2 and ECM terminal 69.
Refer to Wiring Diagram.

Continuity should exist.

2. Also check harness for short to ground and short to power.

OK or NG

OK >> GO TO 9.
NG >> Repair open circuit or short to ground or short to power in harness or connectors.

9. CHECK THROTTLE POSITION SENSOR

Refer to EC-577, "Component Inspection" .

OK or NG

OK >> GO TO 11.
NG >> GO TO 10.

10. REPLACE ELECTRIC THROTTLE CONTROL ACTUATOR

1. Replace the electric throttle control actuator.
2. Perform EC-88, "Throttle Valve Closed Position Learning" .
3. Perform EC-88, "Idle Air Volume Learning" .

>> **INSPECTION END**

11. CHECK INTERMITTENT INCIDENT

Refer to EC-153, "TROUBLE DIAGNOSIS FOR INTERMITTENT INCIDENT" .

>> **INSPECTION END**

Component Inspection

ABS00CYJ

THROTTLE POSITION SENSOR

1. Reconnect all harness connectors disconnected.
2. Perform EC-88, "Throttle Valve Closed Position Learning" .
3. Turn ignition switch ON.
4. Set shift lever to D (A/T) or 1st (M/T) position.
5. Check voltage between ECM terminals 50 (TP sensor 1), 69 (TP sensor 2) and ground under the following conditions.

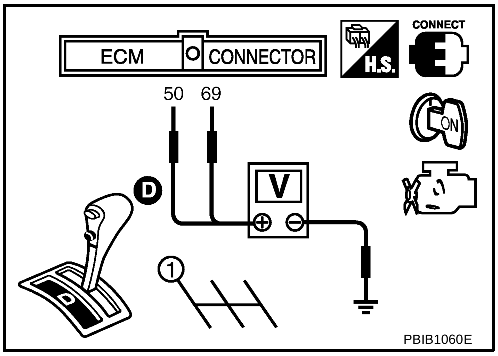

PBIB1060E

Terminal	Accelerator pedal	Voltage
50 (Throttle position sensor 1)	Fully released	More than 0.36V
	Fully depressed	Less than 4.75V
69 (Throttle position sensor 2)	Fully released	Less than 4.75V
	Fully depressed	More than 0.36V

6. If NG, replace electric throttle control actuator and go to the next step.
7. Perform EC-88, "Throttle Valve Closed Position Learning" .
8. Perform EC-88, "Idle Air Volume Learning" .

Remove and Installation

ABS00CYK

ELECTRIC THROTTLE CONTROL ACTUATOR

Refer to EM-16, "INTAKE MANIFOLD" .

DTC P2138 APP SENSOR

PFP:18002

Component Description

ABS00CYL

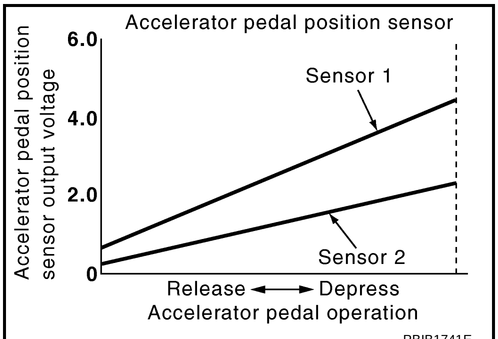

PBIB1741E

The accelerator pedal position sensor is installed on the upper end of the accelerator pedal assembly. The sensor detects the accelerator position and sends a signal to the ECM.
Accelerator pedal position sensor has two sensors. These sensors are a kind of potentiometers which transform the accelerator pedal position into output voltage, and emit the voltage signal to the ECM. In addition, these sensors detect the opening and closing speed of the accelerator pedal and feed the voltage signals to the ECM. The ECM judges the current opening angle of the accelerator pedal from these signals and controls the throttle control motor based on these signals.
Idle position of the accelerator pedal is determined by the ECM receiving the signal from the accelerator pedal position sensor. The ECM uses this signal for the engine operation such as fuel cut.

CONSULT-II Reference Value in Data Monitor Mode

ABS00CYM

Specification data are reference values.

MONITOR ITEM	CONDITION		SPECIFICATION
ACCEL SEN 1	● Ignition switch: ON (Engine stopped)	Accelerator pedal: Fully released	0.5 - 1.0V
		Accelerator pedal: Fully depressed	4.0 - 4.7V
ACCEL SEN 2*	● Ignition switch: ON (Engine stopped)	Accelerator pedal: Fully released	0.3 - 1.2V
		Accelerator pedal: Fully depressed	3.9 - 4.8V
CLSD THL POS	● Ignition switch: ON (Engine stopped)	Accelerator pedal: Fully released	ON
		Accelerator pedal: Slightly depressed	OFF

*: Accelerator pedal position sensor 2 signal is converted by ECM internally. Thus, they differs from ECM terminal voltage signal.

On Board Diagnosis Logic

ABS00CYN

This self-diagnosis has the one trip detection logic.

NOTE:

If DTC P2138 is displayed with DTC P1229, first perform the trouble diagnosis for DTC P1229. Refer to EC-499 .

DTC No.	Trouble diagnosis name	DTC detecting condition	Possible cause
P2138 2138	Accelerator pedal position sensor circuit range/performance problem	Rationally incorrect voltage is sent to ECM compared with the signals from APP sensor 1 and APP sensor 2.	● Harness or connector (The APP sensor 1 and 2 circuit is open or shorted.) (The TP sensor circuit is shorted.) ● Accelerator pedal position sensor (APP sensor 1 and 2) ● Electric throttle control actuator (TP sensor 1 and 2)

FAIL-SAFE MODE

When the malfunction is detected, the ECM enters fail-safe mode and the MIL lights up.

Engine operating condition in fail-safe mode
The ECM controls the electric throttle control actuator in regulating the throttle opening in order for the idle position to be within +10 degrees. The ECM regulates the opening speed of the throttle valve to be slower than the normal condition. So, the acceleration will be poor.

DTC Confirmation Procedure

ABS00CYO

NOTE:

If DTC Confirmation Procedure has been previously conducted, always turn ignition switch OFF and wait at least 10 seconds before conducting the next test.

TESTING CONDITION:

Before performing the following procedure, confirm that battery voltage is more than 10V at idle.

WITH CONSULT-II

1. Turn ignition switch ON.
2. Select “DATA MONITOR” mode with CONSULT-II.
3. Start engine and let it idle for 1 second.
4. If DTC is detected, go to EC-582, "Diagnostic Procedure" .

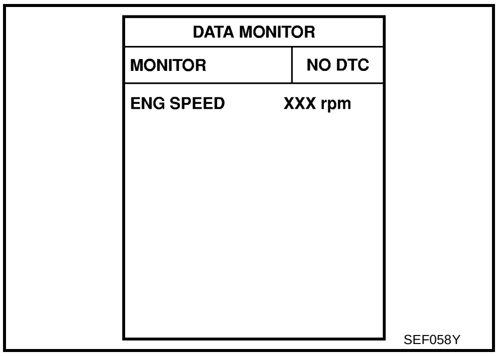

SEF058Y

WITH GST

Follow the procedure “WITH CONSULT-II” above.

Wiring Diagram

ABS00CYP

EC-APPS3-01

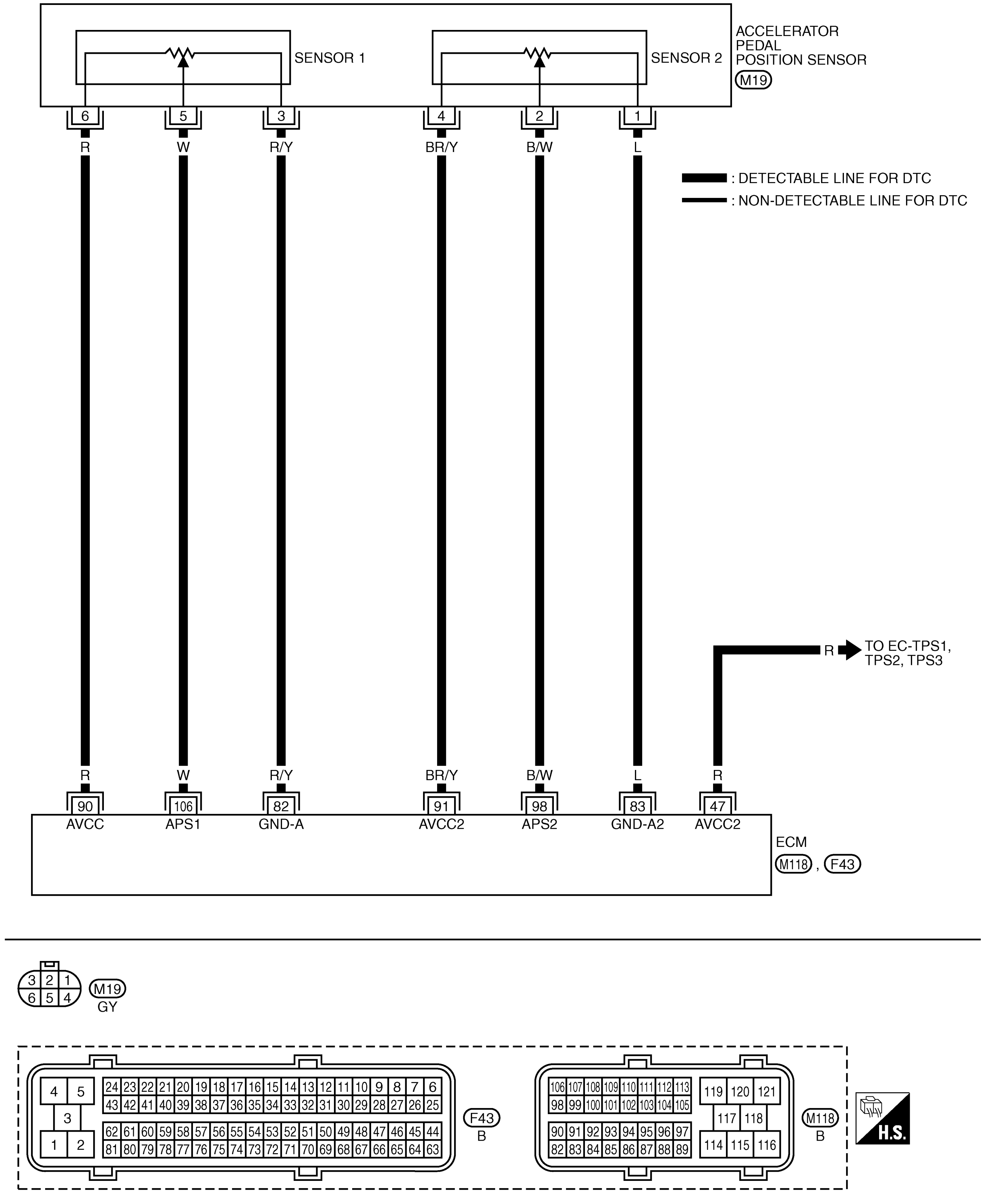

TBWB0089E

Specification data are reference values and are measured between each terminal and ground.

CAUTION:

Do not use ECM ground terminals when measuring input/output voltage. Doing so may result in damage to the ECM's transistor. Use a ground other than ECM terminals, such as the ground.

TERMINAL NO.	WIRE COLOR	ITEM	CONDITION	DATA (DC Voltage)
47	R	Sensor power supply (Throttle position sensor)	**[Ignition switch: ON]**	Approximately 5V
82	R/Y	Sensor ground (Accelerator pedal position sensor 1)	**[Engine is running]** ● **Warm-up condition** ● Idle speed	Approximately 0V
83	L	Sensor ground (Accelerator pedal position sensor 2)	**[Engine is running]** ● **Warm-up condition** ● Idle speed	Approximately 0V
90	R	Sensor power supply (Accelerator pedal position sensor 1)	**[Ignition switch: ON]**	Approximately 5V
91	BR/Y	Sensor power supply (Accelerator pedal position sensor 2)	**[Ignition switch: ON]**	Approximately 5V
98	B/W	Accelerator pedal position sensor 2	**[Ignition switch: ON]** ● Engine stopped ● Accelerator pedal: Fully released	0.15 - 0.6V
			[Ignition switch: ON] ● Engine stopped ● Accelerator pedal: Fully depressed	1.95 - 2.4V
106	W	Accelerator pedal position sensor 1	**[Ignition switch: ON]** ● Engine stopped ● Accelerator pedal: Fully released	0.5 - 1.0V
			[Ignition switch: ON] ● Engine stopped ● Accelerator pedal: Fully depressed	3.9 - 4.7V

Diagnostic Procedure

ABS00D8W

1. CHECK GROUND CONNECTIONS

1. Turn ignition switch OFF.
2. Loosen and retighten three ground screws on the body.
   Refer to EC-161, "Ground Inspection" .

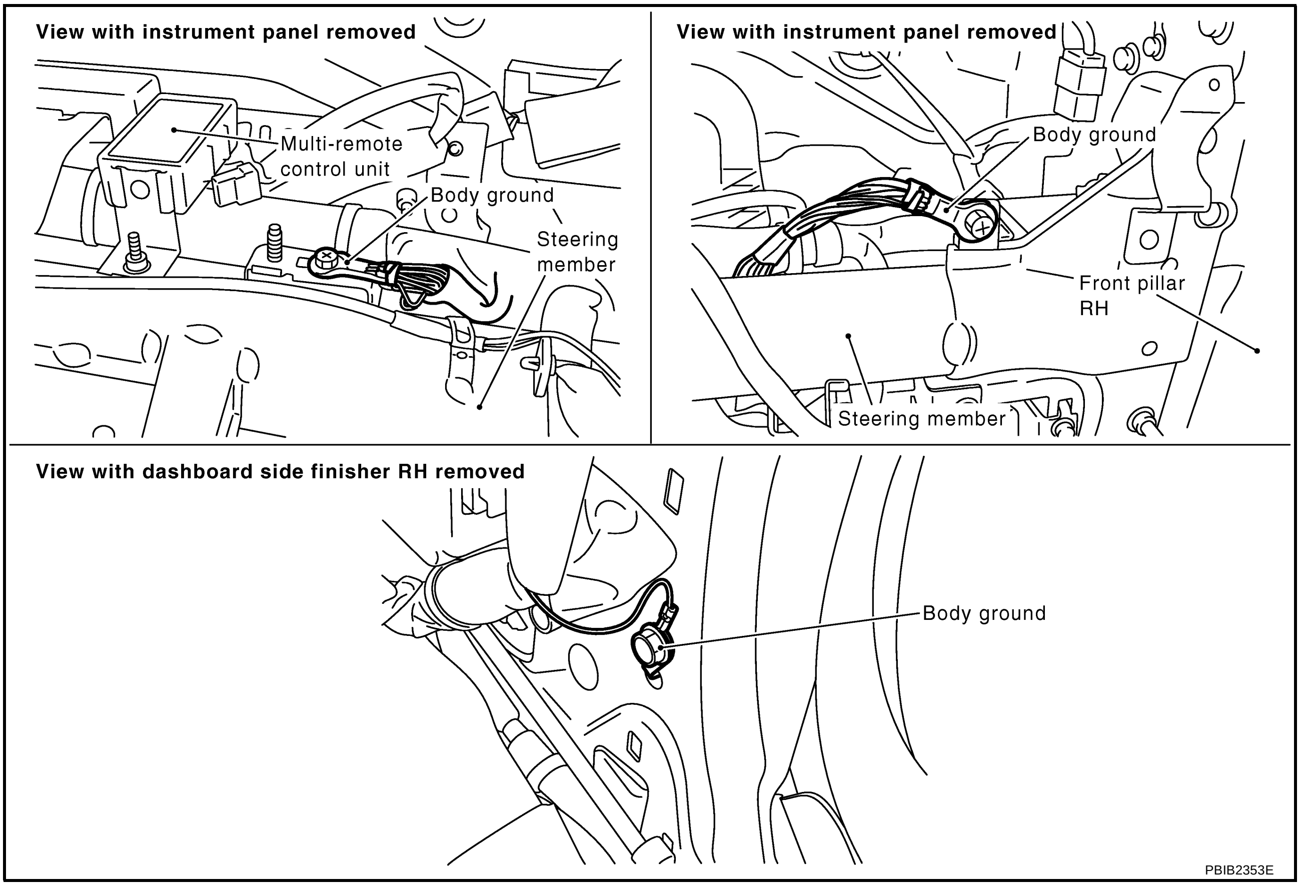

OK or NG

OK >> GO TO 2.
NG >> Repair or replace ground connections.

2. CHECK APP SENSOR 1 POWER SUPPLY CIRCUIT

1. Disconnect accelerator pedal position (APP) sensor harness connector.
2. Turn ignition switch ON.

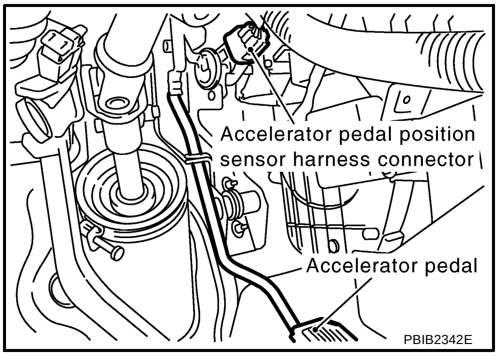

3. Check voltage between APP sensor terminal 6 and ground with CONSULT-II or tester.

Voltage: Approximately 5V

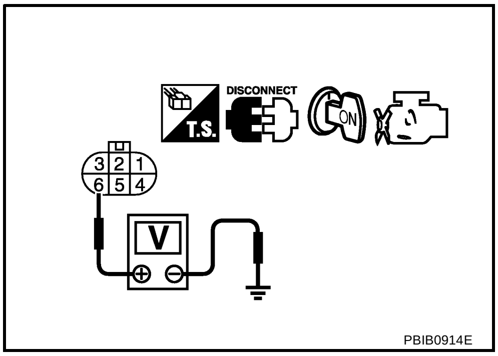

OK or NG

OK >> GO TO 3.
NG >> Repair open circuit or short to ground or short to power in harness or connectors.

3. CHECK APP SENSOR 2 POWER SUPPLY CIRCUIT-I

Check voltage between APP sensor terminal 4 and ground with CONSULT-II or tester.

Voltage: Approximately 5V

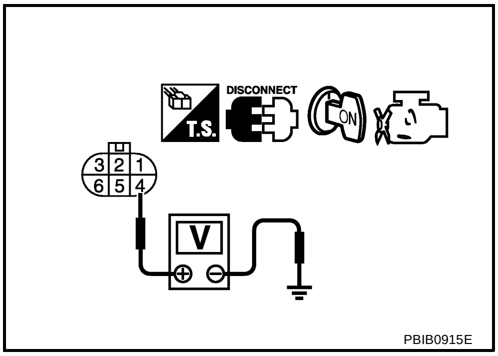

OK or NG

OK >> GO TO 8.
NG >> GO TO 4.

4. CHECK APP SENSOR 2 POWER SUPPLY CIRCUIT-II

1. Turn ignition switch OFF.
2. Disconnect ECM harness connector.
3. Check harness continuity between APP sensor terminal 4 and ECM terminal 91.
   Refer to Wiring Diagram.

Continuity should exist.

OK or NG

OK >> GO TO 5.
NG >> Repair or replace open circuit.

5. CHECK APP SENSOR 2 POWER SUPPLY CIRCUIT-III

Check harness for short to power and short to ground, between the following terminals.

ECM terminal	Sensor terminal	Reference Wiring Diagram
47	Electric throttle control actuator terminal 1	EC-572
91	APP sensor terminal 4	EC-564

OK or NG

OK >> GO TO 6.
NG >> Repair short to ground or short to power in harness or connectors.

6. CHECK THROTTLE POSITION SENSOR

Refer to EC-577, "Component Inspection" .

OK or NG

OK >> GO TO 12.
NG >> GO TO 7.

7. REPLACE ELECTRIC THROTTLE CONTROL ACTUATOR

1. Replace the electric throttle control actuator.
2. Perform EC-88, "Throttle Valve Closed Position Learning" .
3. Perform EC-88, "Idle Air Volume Learning" .

>> **INSPECTION END**

8. CHECK APP SENSOR GROUND CIRCUIT FOR OPEN AND SHORT

1. Turn ignition switch OFF.
2. Disconnect ECM harness connector.
3. Check harness continuity between the following;
   APP sensor terminal 3 and ECM terminal 82,
   APP sensor terminal 1 and ECM terminal 83.
   Refer to Wiring Diagram.

   Continuity should exist.

4. Also check harness for short to ground and short to power.

OK or NG

OK >> GO TO 9.
NG >> Repair open circuit or short to ground or short to power in harness or connectors.

9. CHECK APP SENSOR INPUT SIGNAL CIRCUIT FOR OPEN AND SHORT

1. Check harness continuity between the following;
   APP sensor terminal 5 and ECM terminal 106,
   APP sensor terminal 2 and ECM terminal 98.
   Refer to Wiring Diagram.

   Continuity should exist.

2. Also check harness for short to ground and short to power.

OK or NG

OK >> GO TO 10.
NG >> Repair open circuit or short to ground or short to power in harness or connectors.

A
EC
C
D
E
F
G
H
I
J
K
L
M

10. CHECK APP SENSOR

Refer to EC-585, "Component Inspection" .

OK or NG

OK >> GO TO 12.
NG >> GO TO 11.

11. REPLACE ACCELERATOR PEDAL ASSEMBLY

1. Replace the accelerator pedal assembly.
2. Perform EC-88, "Accelerator Pedal Released Position Learning" .
3. Perform EC-88, "Throttle Valve Closed Position Learning" .
4. Perform EC-88, "Idle Air Volume Learning" .

>> **INSPECTION END**

12. CHECK INTERMITTENT INCIDENT

Refer to EC-153, "TROUBLE DIAGNOSIS FOR INTERMITTENT INCIDENT" .

>> **INSPECTION END**

Component Inspection

ABS00CYR

ACCELERATOR PEDAL POSITION SENSOR

1. Reconnect all harness connectors disconnected.
2. Turn ignition switch ON.
3. Check voltage between ECM terminals 106 (APP sensor 1 signal), 98 (APP sensor 2 signal) and ground under the following conditions.

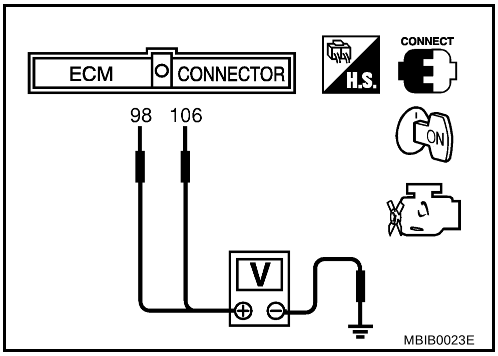

Terminal	Accelerator pedal	Voltage
106 (Accelerator pedal position sensor 1)	Fully released	0.5 - 1.0V
	Fully depressed	3.9 - 4.7V
98 (Accelerator pedal position sensor 2)	Fully released	0.15 - 0.6V
	Fully depressed	1.95 - 2.4V

4. If NG, replace accelerator pedal assembly and go to the next step.
5. Perform EC-88, "Accelerator Pedal Released Position Learning" .
6. Perform EC-88, "Throttle Valve Closed Position Learning" .
7. Perform EC-88, "Idle Air Volume Learning" .

Remove and Installation

ABS00CYS

ACCELERATOR PEDAL

Refer to ACC-3, "ACCELERATOR CONTROL SYSTEM" .

IGNITION SIGNAL

PFP:22448

Component Description

ABS00CYT

IGNITION COIL & POWER TRANSISTOR

The ignition signal from the ECM is sent to and amplified by the power transistor. The power transistor turns ON and OFF the ignition coil primary circuit. This ON/OFF operation induces the proper high voltage in the coil secondary circuit.

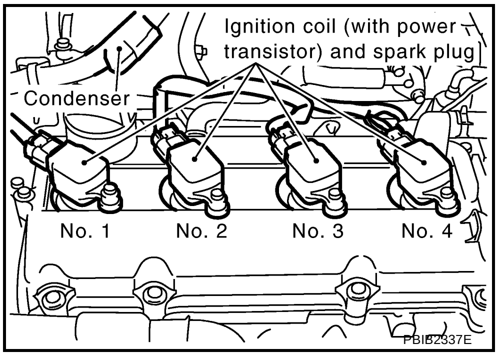

Wiring Diagram

ABS00CYU

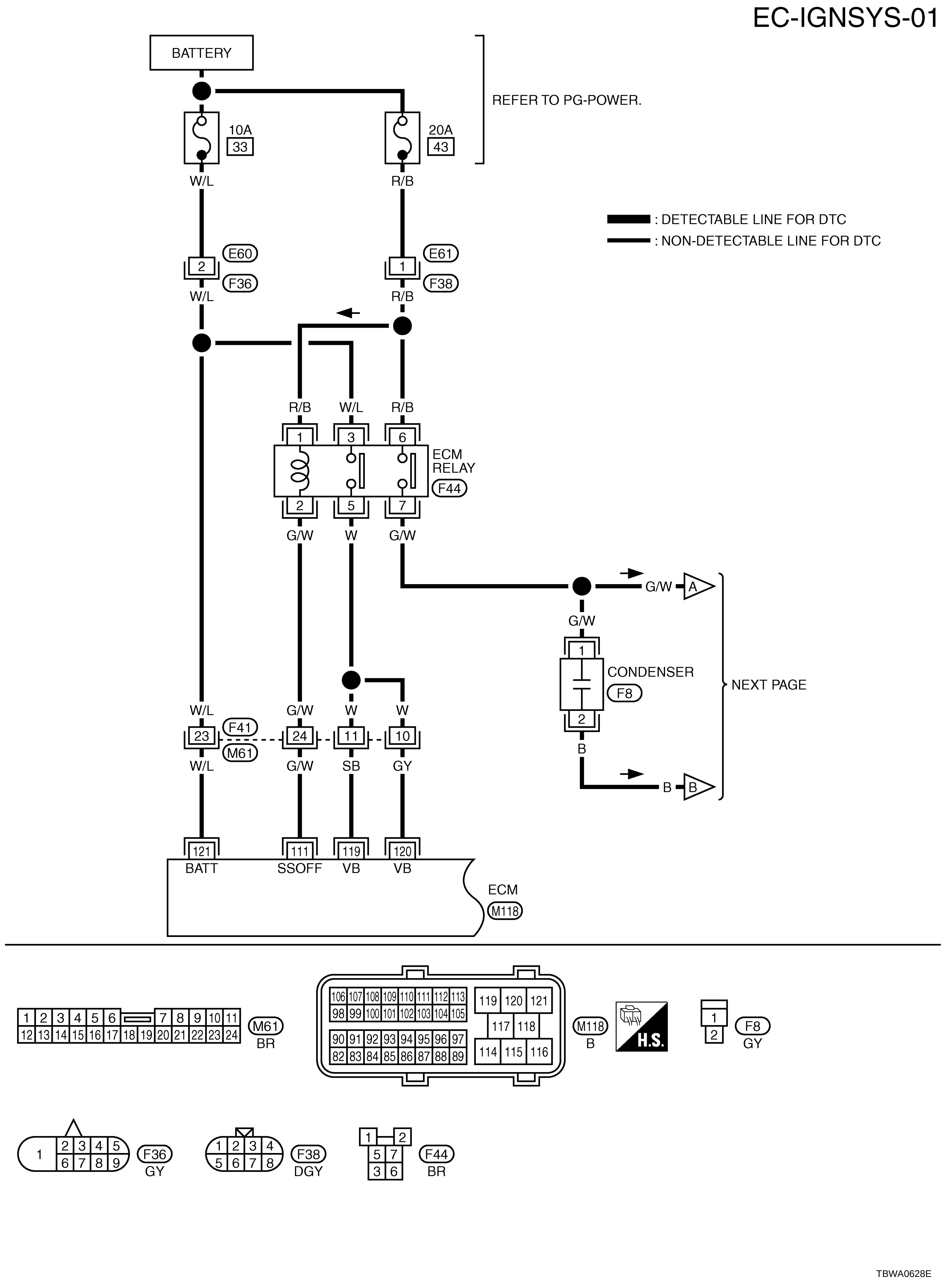

Specification data are reference values and are measured between each terminal and ground.

CAUTION:

Do not use ECM ground terminals when measuring input/output voltage. Doing so may result in damage to the ECM's transistor. Use a ground other than ECM terminals, such as the ground.

TERMINAL NO.	WIRE COLOR	ITEM	CONDITION	DATA (DC Voltage)
111	G/W	ECM relay (Self shut-off)	**[Engine is running]** **[Ignition switch: OFF]** ● A few seconds after turning ignition switch OFF	0 - 1.0V
			[Ignition switch: OFF] ● More than a few seconds after turning ignition switch OFF	BATTERY VOLTAGE (11 - 14V)
119 120	SB GY	Power supply for ECM	**[Ignition switch: ON]**	BATTERY VOLTAGE (11 - 14V)
121	W/L	Power supply for ECM (Back-up)	**[Ignition switch: OFF]**	BATTERY VOLTAGE (11 - 14V)

EC-IGNSYS-02

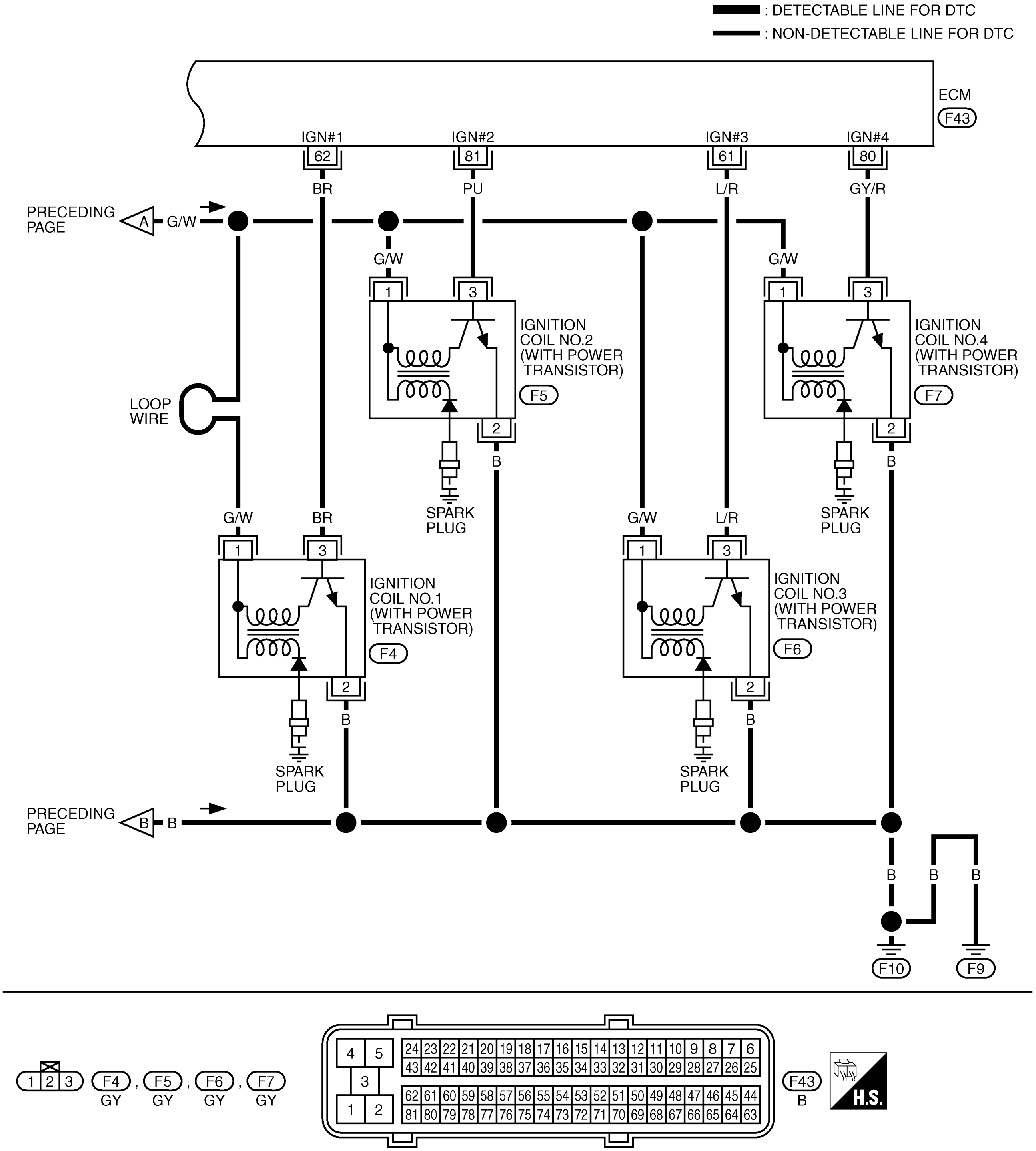

TBWB0133E

Specification data are reference values and are measured between each terminal and ground.
Pulse signal is measured by CONSULT-II.

CAUTION:

Do not use ECM ground terminals when measuring input/output voltage. Doing so may result in damage to the ECM's transistor. Use a ground other than ECM terminals, such as the ground.

TERMINAL NO.	WIRE COLOR	ITEM	CONDITION	DATA (DC Voltage)
61 62 80 81	L/R BR GY/R PU	Ignition signal No. 3 Ignition signal No. 1 Ignition signal No. 4 Ignition signal No. 2	**[Engine is running]** ● **Warm-up condition** ● Idle speed **NOTE:** The pulse cycle changes depending on rpm at idle.	0 - 0.1V★ 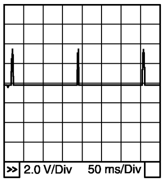 PBIB0521E
			[Engine is running] ● **Warm-up condition** ● Engine speed is 2,000 rpm.	0 - 0.2V★ 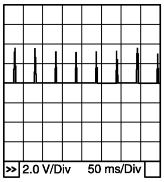 PBIB0522E

★: Average voltage for pulse signal (Actual pulse signal can be confirmed by oscilloscope.)

Diagnostic Procedure

ABS00D8X

1. CHECK ENGINE START

Turn ignition switch OFF, and restart engine.

Is engine running?

Yes or No

Yes (With CONSULT-II)>>GO TO 2.
Yes (Without CONSULT-II)>>GO TO 3.
No >> GO TO 4.

2. CHECK OVERALL FUNCTION

With CONSULT-II

1. Perform “POWER BALANCE” in “ACTIVE TEST” mode with CONSULT-II.
2. Make sure that each circuit produces a momentary engine speed drop.

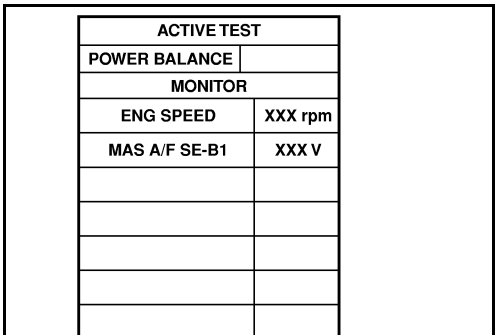

PBIB0133E

OK or NG

OK >> **INSPECTION END**
NG >> GO TO 12.

3. CHECK OVERALL FUNCTION

Without CONSULT-II

1. Let engine idle.
2. Read the voltage signal between ECM terminals 61, 62, 80, 81 and ground with an oscilloscope.
3. Verify that the oscilloscope screen shows the signal wave as shown below.

   NOTE:
   The pulse cycle changes depending on rpm at idle.

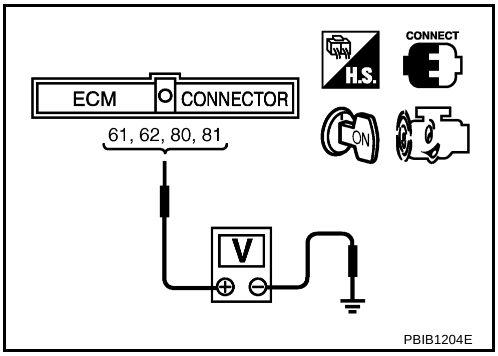

PBIB1204E

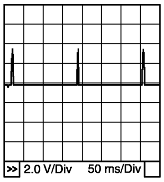

PBIB0521E

OK or NG

OK >> **INSPECTION END**
NG >> GO TO 12.

4. CHECK IGNITION COIL POWER SUPPLY CIRCUIT-I

1. Turn ignition switch ON.
2. Check voltage between ECM terminals 119, 120 and ground with CONSULT-II or tester.

Voltage: Battery voltage

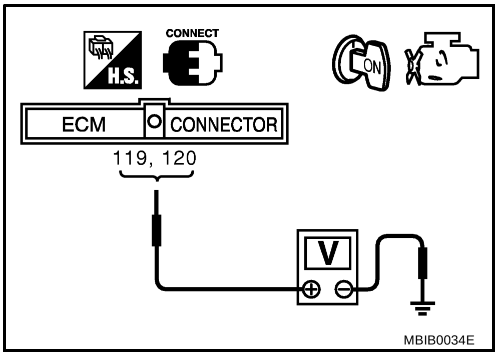

MBIB0034E

OK or NG

OK >> GO TO 5.
NG >> Go to EC-154, "POWER SUPPLY AND GROUND CIRCUIT" .

5. CHECK IGNITION COIL POWER SUPPLY CIRCUIT-II

1. Turn ignition switch OFF.
2. Disconnect condenser harness connector.
3. Turn ignition switch ON.

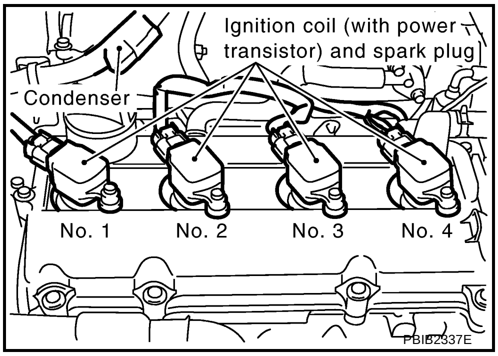

4. Check voltage between condenser terminal 1 and ground with CONSULT-II or tester.

Voltage: Battery voltage

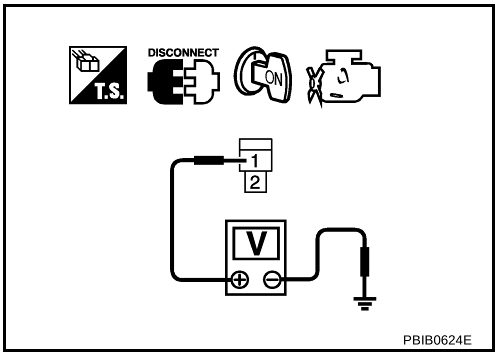

OK or NG

OK >> GO TO 10.
NG >> GO TO 6.

6. CHECK IGNITION COIL POWER SUPPLY CIRCUIT-III

1. Turn ignition switch OFF.
2. Disconnect ECM relay.
3. Check harness continuity between ECM relay terminal 7 and condenser terminal 1.
   Refer to Wiring Diagram.

Continuity should exist.

4. Also check harness for short to ground and short to power.

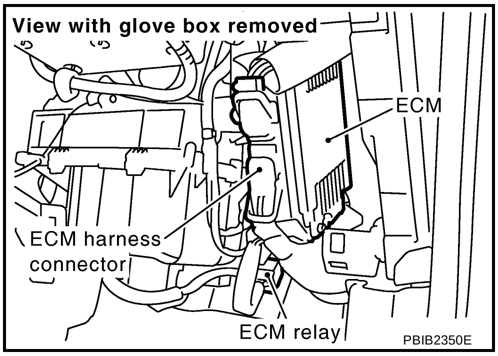

OK or NG

OK >> GO TO 7.
NG >> Repair open circuit or short to ground or short to power in harness or connectors.

7. CHECK IGNITION COIL POWER SUPPLY CIRCUIT-IV

Check voltage between ECM relay terminal 6 and ground with CONSULT-II or tester.

Voltage: Battery voltage

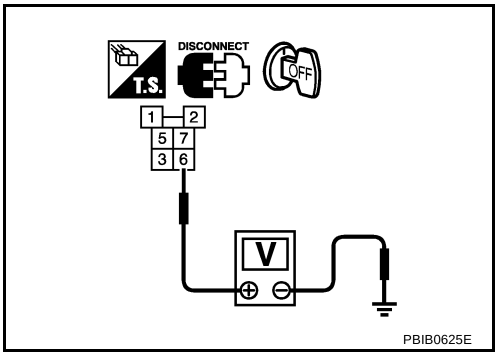

OK or NG

OK >> GO TO 9.
NG >> GO TO 8.

8. DETECT MALFUNCTIONING PART

Check the following.

- Harness connectors E61, F38
- 20A fuse
- Harness for open or short between ECM relay and battery

>> Repair or replace harness or connectors.

9. CHECK ECM RELAY

Refer to EC-595, "Component Inspection" .

OK or NG

OK >> GO TO 17.
NG >> Replace ECM relay.

10. CHECK CONDENSER GROUND CIRCUIT FOR OPEN AND SHORT

1. Turn ignition switch OFF.
2. Check harness continuity between condenser terminal 2 and ground.
   Refer to Wiring diagram.

   Continuity should exist.

3. Also check harness for short to power.

OK or NG

OK >> GO TO 11.
NG >> Repair open circuit or short to power in harness or connector.

11. CHECK CONDENSER

Refer to EC-595, "Component Inspection" .

OK or NG

OK >> GO TO 12.
NG >> Replace condenser.

12. CHECK IGNITION COIL POWER SUPPLY CIRCUIT-V

1. Turn ignition switch OFF.
2. Reconnect all harness connectors disconnected.
3. Disconnect ignition coil harness connector.
4. Turn ignition switch ON.

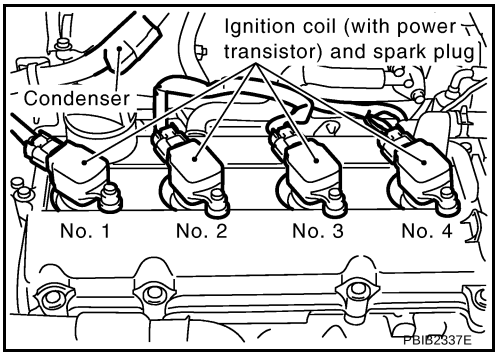

5. Check voltage between ignition coil terminal 1 and ground with CONSULT-II or tester.

Voltage: Battery voltage

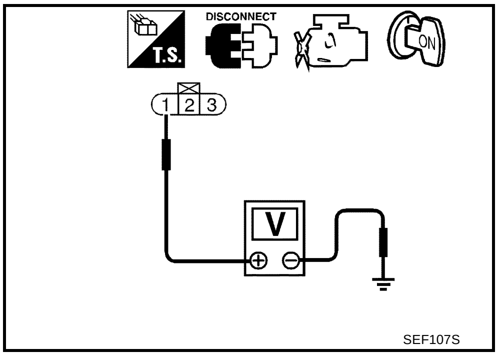

OK or NG

OK >> GO TO 13.
NG >> Repair open circuit or short to ground or short to power in harness or connectors.

13. CHECK IGNITION COIL GROUND CIRCUIT FOR OPEN AND SHORT

1. Turn ignition switch OFF.
2. Check harness continuity between ignition coil terminal 2 and ground. Refer to Wiring Diagram.

Continuity should exist.

3. Also check harness for short to power.

OK or NG

OK >> GO TO 14.
NG >> Repair open circuit or short to power in harness or connectors.

14. CHECK IGNITION COIL OUTPUT SIGNAL CIRCUIT FOR OPEN AND SHORT

1. Disconnect ECM harness connector.
2. Check harness continuity between ECM terminals 61, 62, 80, 81 and ignition coil terminal 3. Refer to Wiring Diagram.

Continuity should exist.

3. Also check harness for short to ground and short to power.

OK or NG

OK >> GO TO 15.
NG >> Repair open circuit or short to ground or short to power in harness or connectors.

15. CHECK IGNITION COIL WITH POWER TRANSISTOR

Refer to EC-595, "Component Inspection" .

OK or NG

OK >> GO TO 16.
NG >> Replace ignition coil with power transistor.

16. CHECK INTERMITTENT INCIDENT

Refer to EC-153, "TROUBLE DIAGNOSIS FOR INTERMITTENT INCIDENT" .

>> **INSPECTION END**

Component Inspection

ABS00CYW

ECM RELAY

1. Apply 12V direct current between ECM relay terminals 1 and 2.
2. Check continuity between relay terminals 3 and 5, 6 and 7.

Condition	Continuity
12V direct current supply between terminals 1 and 2	Yes
OFF	No

3. If NG, replace ECM relay.

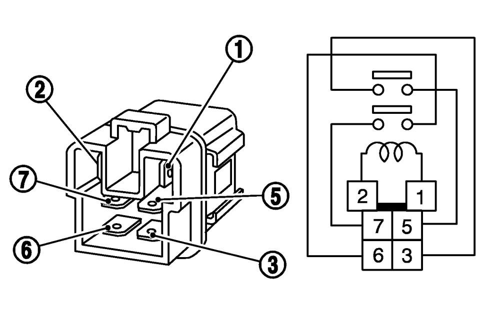

PBIB0077E

IGNITION COIL WITH POWER TRANSISTOR

CAUTION:

Do the following procedure in the place where ventilation is good without the combustible.

1. Turn ignition switch OFF.
2. Disconnect ignition coil harness connector.
3. Check resistance between ignition coil terminals as follows.

Terminal No. (Polarity)	Resistance Ω [at 25°C (77°F)]
1 and 2	Except 0 or ∞
1 and 3	Except 0
2 and 3	

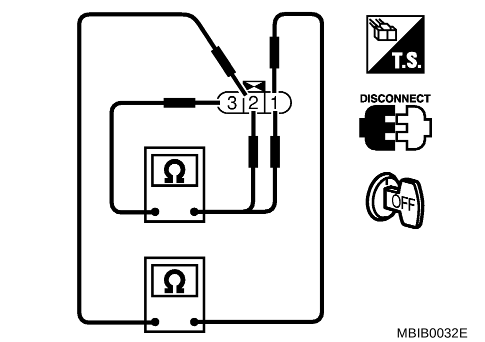

MBIB0032E

4. If NG, Replace ignition coil with power transistor.
   If OK, go to next step.
5. Turn ignition switch OFF.
6. Reconnect all harness connectors disconnected.
7. Remove fuel pump fuse in located in fuse box to release fuel pressure.

   NOTE:
   Do not use CONSULT-II to release fuel pressure, or fuel pressure applies again during the following procedure.
8. Start engine.
9. After engine stalls, crank it 2 or 3 times to release all fuel pressure.
10. Turn ignition switch OFF.
11. Remove ignition coil harness connectors to avoid the electrical discharge from the ignition coils.
12. Remove ignition coil and spark plug of the cylinder to be checked.
13. Crank engine for 5 seconds or more to remove combustion gas in the cylinder.

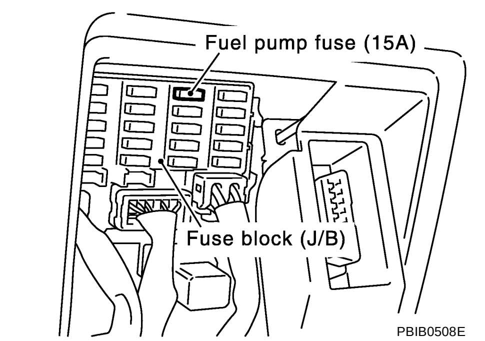

PBIB0508E

14. Connect spark plug and harness connector to ignition coil.
15. Fix ignition coil using a rope etc. with gap of 13 - 17 mm between the edge of the spark plug and grounded metal portion as shown in the figure.
16. Crank engine for about three seconds, and check whether spark is generated between the spark plug and the grounded part.

    Spark should be generated.

    CAUTION:

    - **Do not approach to the spark plug and the ignition coil within 50cm. Be careful not to get an electrical shock while checking, because the electrical discharge voltage becomes 20kV or more.**
    - **It might cause to damage the ignition coil if the gap of 17 mm or more is taken.**

    NOTE:

    When the gap is 13 mm or less, the spark might be generated even if the coil is malfunctioning.

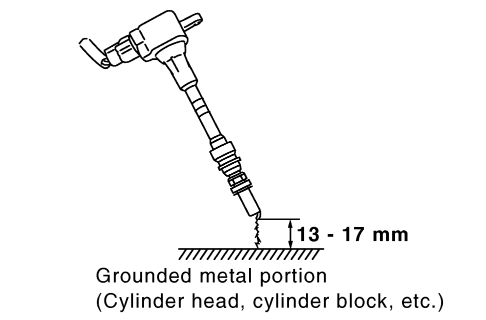

PBIB2325E

17. If NG, Replace ignition coil with power transistor.

CONDENSER

1. Turn ignition switch OFF.
2. Disconnect condenser harness connector.
3. Check resistance between condenser terminals as 1 and 2.

    Resistance: Above 1 MΩ [at 25°C (77°F)]

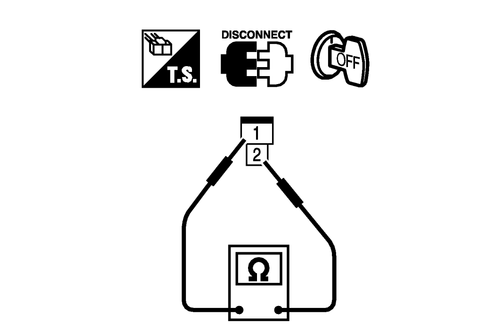

PBIB0794E

Removal and Installation

ABS00CYX

IGNITION COIL WITH POWER TRANSISTOR

Refer to EM-27, "IGNITION COIL" .

VIAS

PFP:14956

Description

ABS00CYY

SYSTEM DESCRIPTION

Sensor	Input Signal to ECM	ECM function	Actuator
Mass air flow sensor	Amount of intake air	VIAS control	VIAS control solenoid valve
Throttle position sensor	Throttle position		
Accelerator pedal position sensor	Closed throttle position		
Battery	Battery voltage*		
Crankshaft position sensor (POS) Camshaft position sensor (PHASE)	Engine speed*		
Engine coolant temperature sensor	Engine coolant temperature		

*: ECM determines the start signal status by the signals of engine speed and battery voltage.

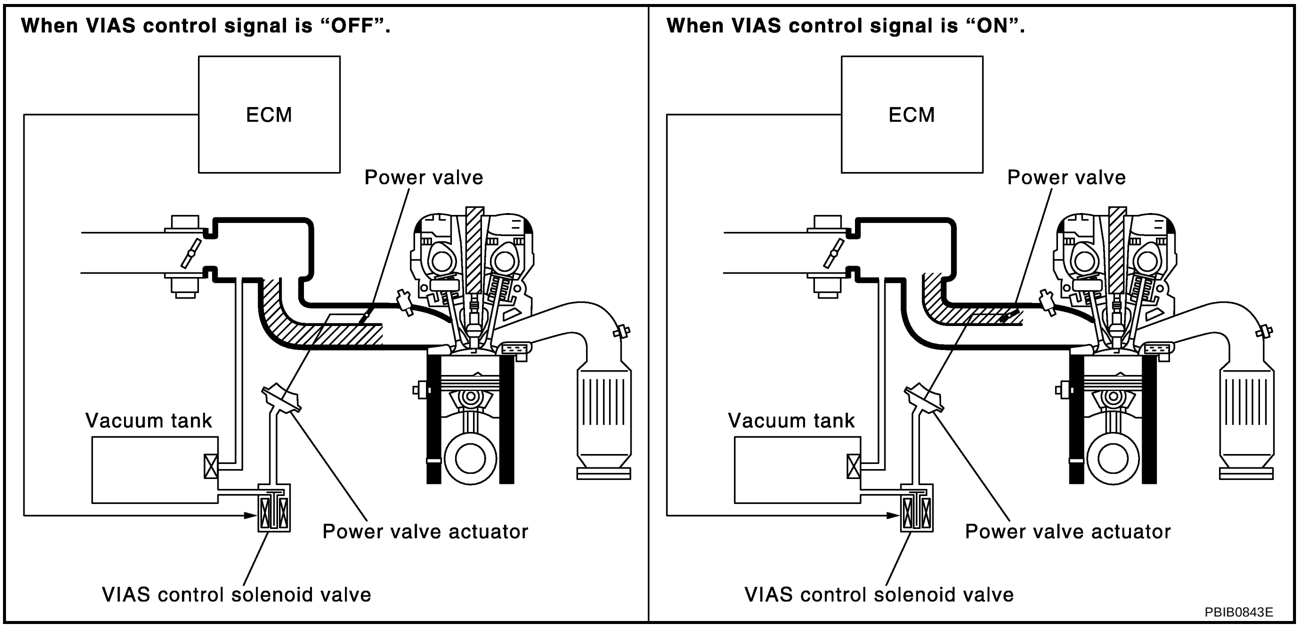

When the engine is running at low or medium speed, the power valve is fully closed. Under this condition, the effective suction port length is equivalent to the total length of the intake manifold collector's suction port including the intake valve. This long suction port provides increased air intake which results in improved suction efficiency and higher torque generation.

The surge tank and one-way valve are provided. When engine is running at high speed, the ECM sends the signal to the VIAS control solenoid valve. This signal introduces the intake manifold vacuum into the power valve actuator and therefore opens the power valve to two suction passages together in the collector.

Under this condition, the effective port length is equivalent to the length of the suction port provided independently for each cylinder. This shortened port length results in enhanced engine output with reduced suction resistance under high speeds.

COMPONENT DESCRIPTION

Power Valve Actuator

The power valve actuator is installed in intake manifold collector and used to control the suction passage of the variable induction air control system. It is set in the fully closed or fully opened position by the power valve actuator operated by the vacuum stored in the surge tank. The vacuum in the surge tank is controlled by the VIAS control solenoid valve.

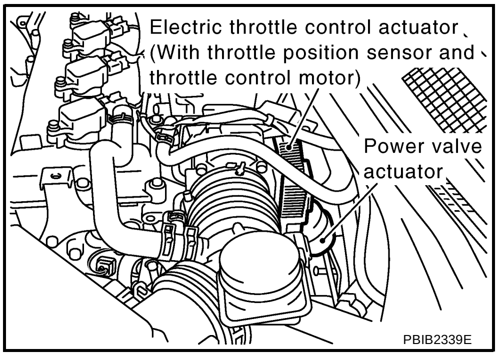

VIAS Control Solenoid Valve

The VIAS control solenoid valve cuts the intake manifold vacuum signal for power valve actuator. It responds to ON/OFF signals from the ECM. When the solenoid is off, the vacuum signal from the intake manifold is cut. When the ECM sends an ON signal the coil pulls the plunger downward and feeds the vacuum signal to the power valve actuator.

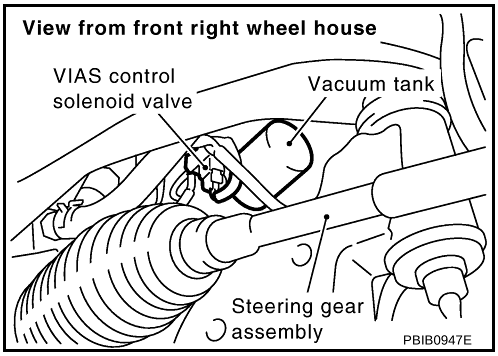

CONSULT-II Reference Value in Data Monitor Mode

ABS00CYZ

MONITOR ITEM	CONDITION		SPECIFICATION
VIAS S/V	● Engine: After warming up	Idle	OFF
		More than 5,000 rpm	ON

Wiring Diagram

ABS00CZ0

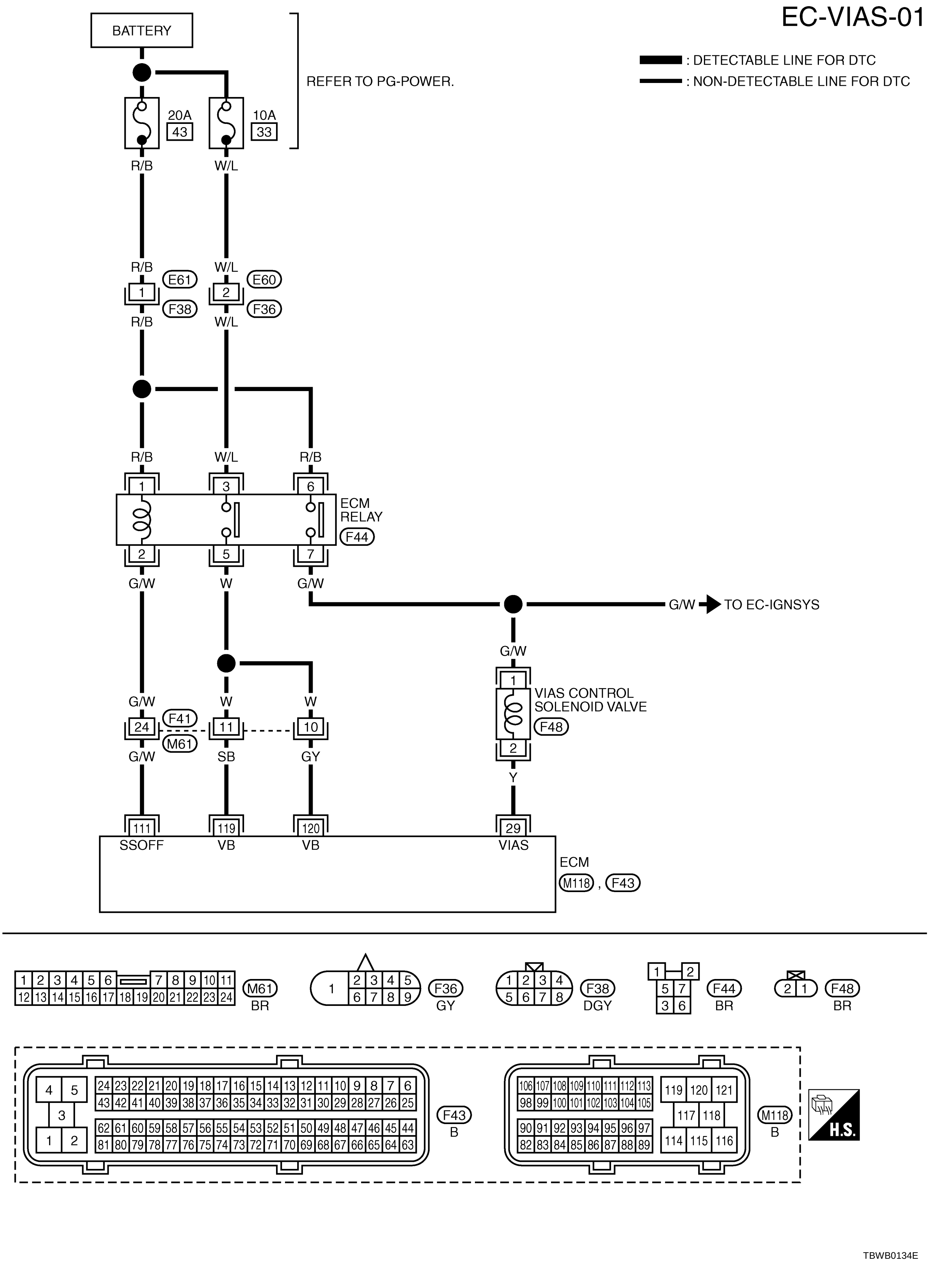

Specification data are reference values and are measured between each terminal and body ground.

CAUTION:

Do not use ECM ground terminals when measuring input/output voltage. Doing so may result in damage to the ECM's transistor. Use a ground other than ECM terminals, such as the ground.

TERMINAL NO.	WIRE COLOR	ITEM	CONDITION	DATA (DC Voltage)
29	Y	VIAS control solenoid valve	**[Engine is running]** ● Idle speed	BATTERY VOLTAGE (11 - 14V)
			[Engine is running] ● Engine speed is above 5,000 rpm	0 - 1.0V

Diagnostic Procedure

ABS00D8Y

1. CHECK OVERALL FUNCTION

With CONSULT-II

1. Start engine and warm it up to normal operating temperature.
2. Perform “VIAS SOL VALVE” in “ACTIVE TEST” mode with CONSULT-II.

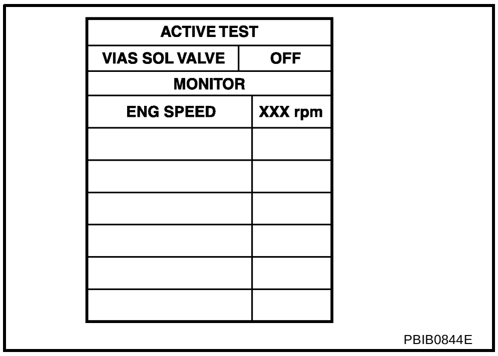

PBIB0844E

3. Turn VIAS control solenoid valve ON and OFF, and make sure that power valve actuator rod moves.

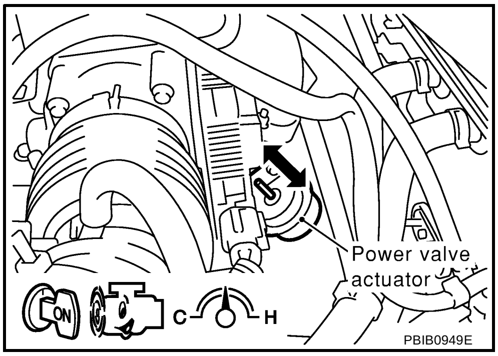

PBIB0949E

Without CONSULT-II

1. Start engine and warm it up to normal operating temperature.
2. Rev engine quickly up to above 5,000 rpm and make sure that power valve actuator rod moves.

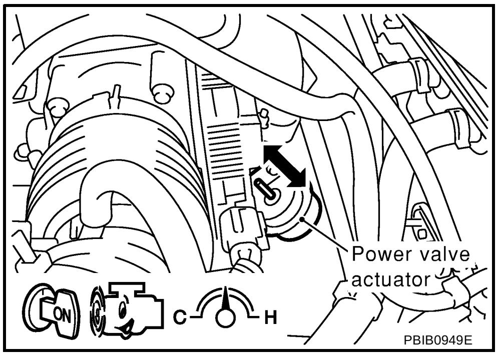

PBIB0949E

OK or NG

OK >> **INSPECTION END**
NG (With CONSULT-II) >>GO TO 2.
NG (Without CONSULT-II) >>GO TO 3.

2. CHECK VACUUM EXISTENCE

With CONSULT-II

1. Stop engine and disconnect vacuum hose connected to power valve actuator.
2. Start engine and let it idle.
3. Perform “VIAS SOL VALVE” in “ACTIVE TEST” mode with CONSULT-II.
4. Turn VIAS control solenoid valve ON and OFF, and check vacuum existence under the following conditions.

VIAS SOL VALVE	Vacuum
ON	Should exist.
OFF	Should not exist.

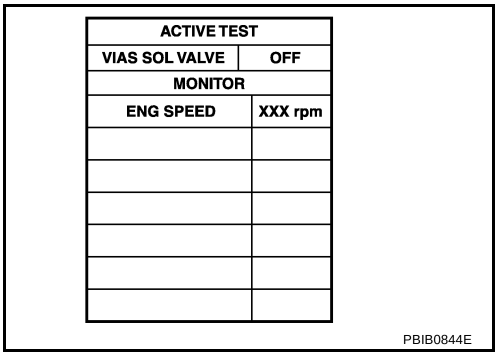

PBIB0844E

OK or NG

OK >> Repair or replace power valve actuator.
NG >> GO TO 4.

3. CHECK VACUUM EXISTENCE

Without CONSULT-II

1. Stop engine and disconnect vacuum hose connected to power valve actuator.
2. Disconnect VIAS control solenoid valve harness connector.
3. Start engine and let it idle.
4. Apply 12V of direct current between VIAS control solenoid valve terminals 1 and 2.
5. Check vacuum existence under the following conditions.

Condition	Vacuum
12V direct current supply	Should exist.
No supply	Should not exist.

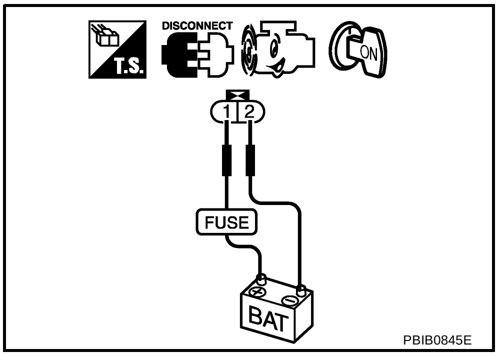

PBIB0845E

OK or NG

OK >> Repair or replace power valve actuator.
NG >> GO TO 4.

4. CHECK VACUUM HOSE

1. Stop engine.
2. Check hoses and tubes between intake manifold and power valve actuator for crack, clogging, improper connection or disconnection. Refer to EC-112, "Vacuum Hose Drawing" .

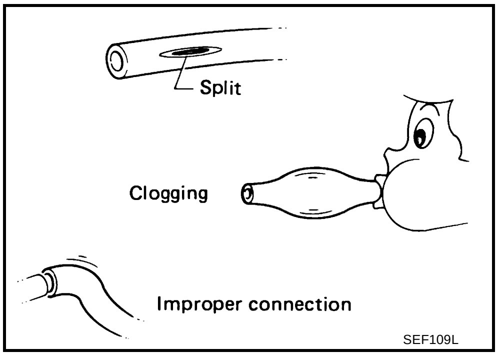

SEF109L

OK or NG

OK >> GO TO 5.
NG >> Repair hoses or tubes.

5. CHECK VACUUM TANK

Refer to EC-605, "Component Inspection" .

OK or NG

OK >> GO TO 6.
NG >> Replace vacuum tank.

6. CHECK VIAS CONTROL SOLENOID VALVE POWER SUPPLY CIRCUIT-I

1. Disconnect VIAS control solenoid valve harness connector.
2. Turn ignition switch ON.

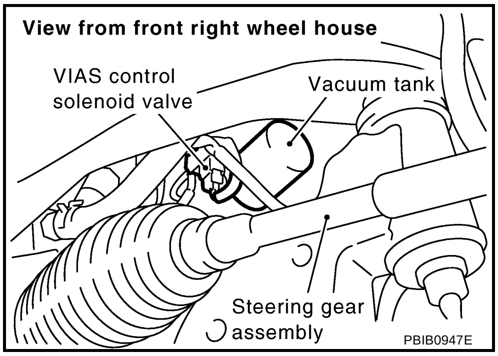

3. Check voltage between VIAS control solenoid valve terminal 1 and ground with CONSULT-II or tester.

Voltage: Battery voltage

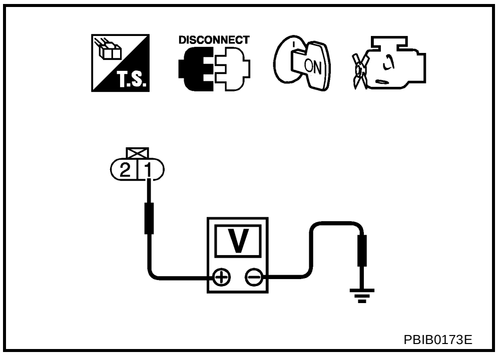

OK or NG

OK >> GO TO 7.
NG >> Repair open circuit or short to ground or short to power in harness or connectors.

7. CHECK VIAS CONTROL SOLENOID VALVE POWER SUPPLY CIRCUIT-II

1. Turn ignition switch OFF.
2. Disconnect ECM relay.
3. Check harness continuity between ECM relay terminal 7 and condenser terminal 1.
   Refer to Wiring Diagram.

Continuity should exist.

4. Also check harness for short to ground and short to power.

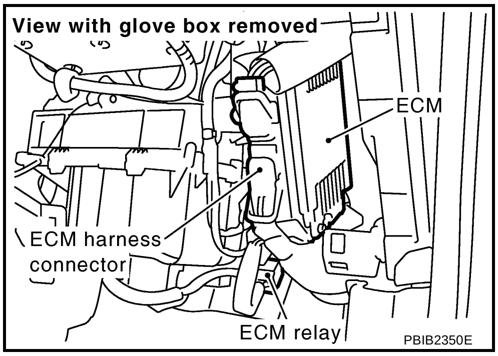

OK or NG

OK >> GO TO 8.
NG >> Repair open circuit or short to ground or short to power in harness or connectors.

8. CHECK VIAS CONTROL SOLENOID VALVE POWER SUPPLY CIRCUIT-III

Check voltage between ECM relay terminal 6 and ground with CONSULT-II or tester.

Voltage: Battery voltage

OK or NG

OK >> GO TO 10.
NG >> GO TO 9.

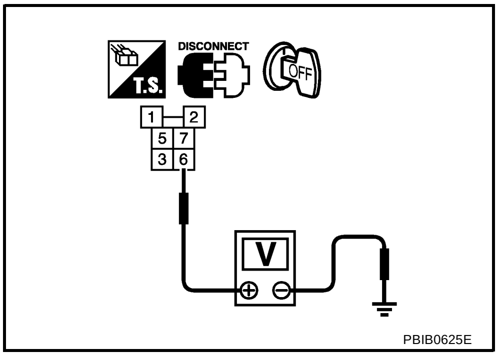

9. DETECT MALFUNCTIONING PART

Check the following.

- Harness connectors E61, F38
- 20A fuse
- Harness for open or short between ECM relay and battery

>> Repair or replace harness or connectors.

10. CHECK ECM RELAY

Refer to EC-595, "Component Inspection" .

OK or NG

OK >> GO TO 13.
NG >> Replace ECM relay.

11. CHECK VIAS CONTROL SOLENOID VALVE OUTPUT SIGNAL CIRCUIT FOR OPEN AND SHORT

1. Turn ignition switch OFF.
2. Disconnect ECM harness connector.
3. Check harness continuity between VIAS control solenoid valve terminal 2 and ECM terminal 29. Refer to Wiring Diagram.

Continuity should exist.

4. Also check harness for short to ground and short to power.

OK or NG

OK >> GO TO 12.
NG >> Repair open circuit or short to ground or short to power in harness or connectors.

12. CHECK VIAS CONTROL SOLENOID VALVE

Refer to EC-605, "Component Inspection" .

OK or NG

OK >> GO TO 13.
NG >> Replace VIAS control solenoid valve.

13. CHECK INTERMITTENT INCIDENT

Refer to EC-153, "TROUBLE DIAGNOSIS FOR INTERMITTENT INCIDENT" .

>> **INSPECTION END**

Component Inspection

ABS00CZ2

ECM RELAY

1. Apply 12V direct current between ECM relay terminals 1 and 2.
2. Check continuity between relay terminals 3 and 5, 6 and 7.

Condition	Continuity
12V direct current supply between terminals 1 and 2	Yes
OFF	No

3. If NG, replace ECM relay.

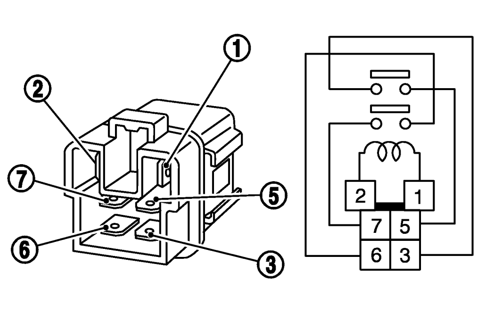

PBIB0077E

VIAS CONTROL SOLENOID VALVE

With CONSULT-II

1. Reconnect harness connectors disconnected.
2. Turn ignition switch ON.
3. Perform “VIAS SOL VALVE” in “ACTIVE TEST” mode.
4. Check air passage continuity and operation delay time under the following conditions.

Condition VIAS SOL VALVE	Air passage continuity between A and B	Air passage continuity between A and C
ON	Yes	No
OFF	No	Yes

Operation takes less than 1 second.

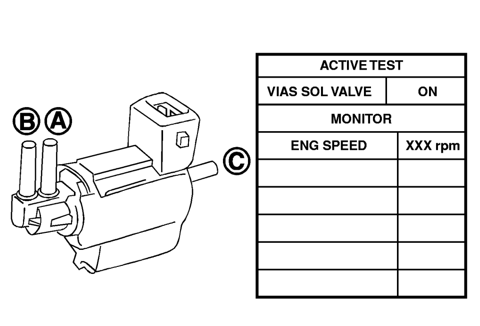

PBIB0177E

With GST

Check air passage continuity and operation delay time under the following conditions.

Condition	Air passage continuity between A and B	Air passage continuity between A and C
12V direct current supply between terminals 1 and 2	Yes	No
No supply	No	Yes

Operation takes less than 1 second.

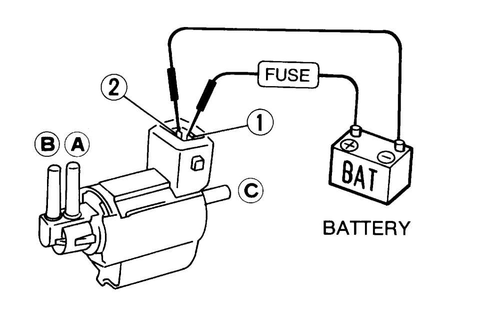

MEC488B

VACUUM TANK

1. Disconnect vacuum hose connected to vacuum tank.
2. Connect a vacuum pump to the port **A** of vacuum pump.
3. Apply vacuum and make sure that vacuum exists at the port **B** .

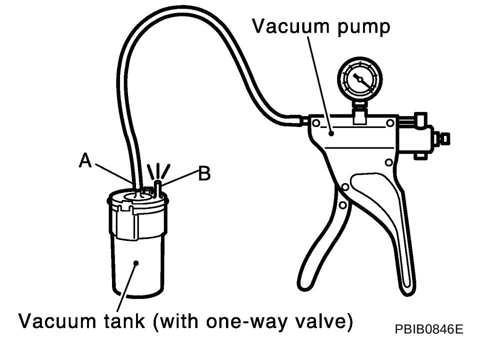

PBIB0846E

Removal and Installation

ABS00CZ3

VIAS CONTROL SOLENOID VALVE

Refer to EM-16, "INTAKE MANIFOLD" .

INJECTOR CIRCUIT

PFP:16600

Component Description

ABS00CZ4

The fuel injector is a small, precise solenoid valve. When the ECM supplies a ground to the injector circuit, the coil in the injector is energized. The energized coil pulls the ball valve back and allows fuel to flow through the injector into the intake manifold. The amount of fuel injected depends upon the injection pulse duration. Pulse duration is the length of time the injector remains open. The ECM controls the injection pulse duration based on engine fuel needs.

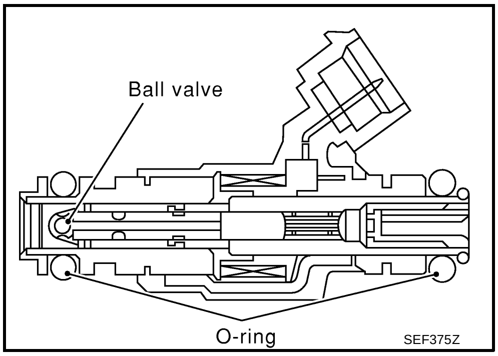

CONSULT-II Reference Value in Data Monitor Mode

ABS00CZ5

Specification data are reference values.

MONITOR ITEM	CONDITION		SPECIFICATION
B/FUEL SCHDL	See EC-143, "TROUBLE DIAGNOSIS - SPECIFICATION VALUE" .		
INJ PULSE-B1	● Engine: After warming up ● Shift lever: N (A/T), Neutral (M/T) ● Air conditioner switch: OFF ● No-load	Idle	2.0 - 3.0 msec
		2,000 rpm	1.9 - 2.9 msec

Wiring Diagram

ABS00CZ6

EC-INJECT-01

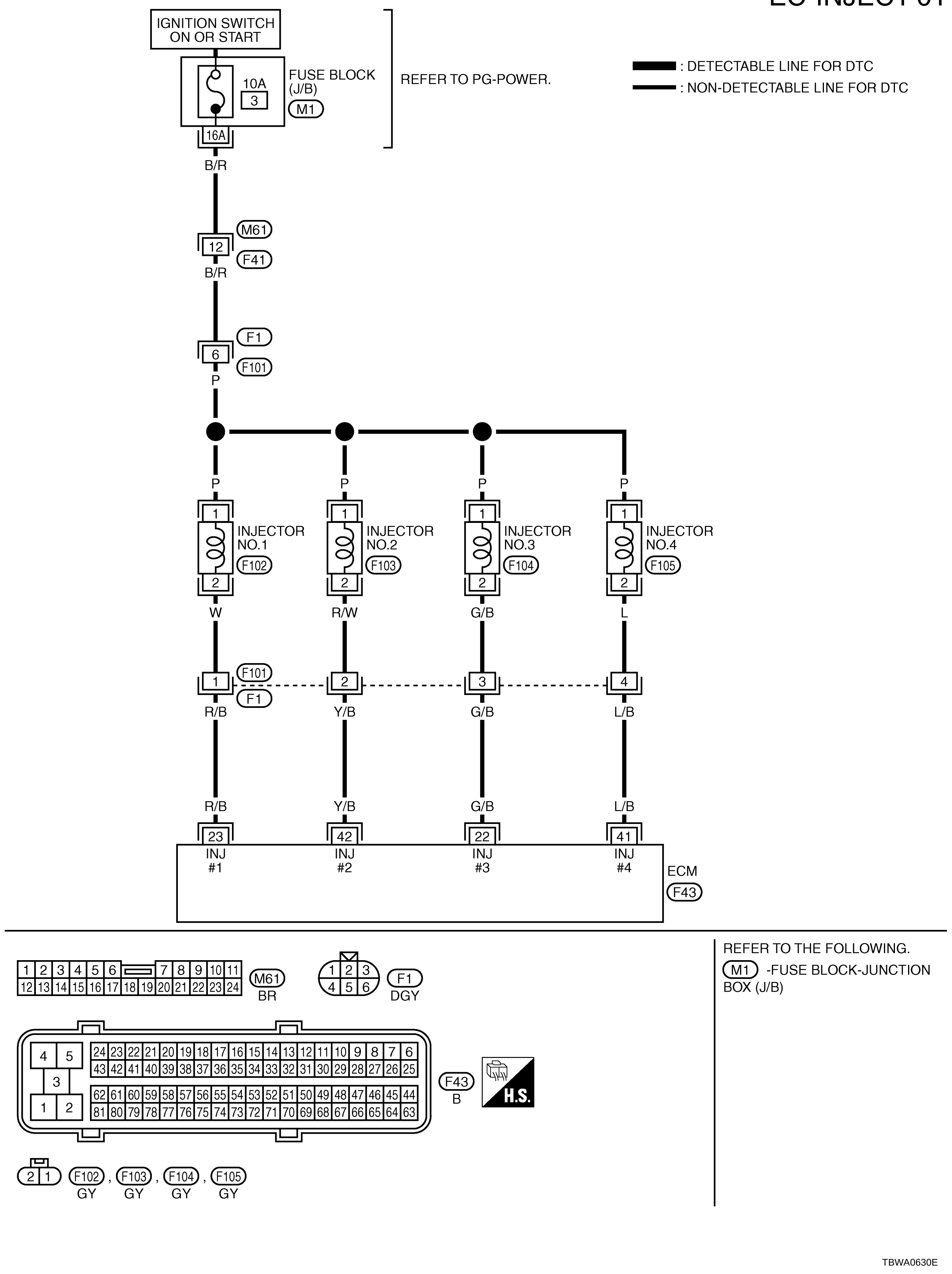

Specification data are reference values and are measured between each terminal and ground.
Pulse signal is measured by CONSULT-II.

CAUTION:

Do not use ECM ground terminals when measuring input/output voltage. Doing so may result in damage to the ECM's transistor. Use a ground other than ECM terminals, such as the ground.

TERMINAL NO.	WIRE COLOR	ITEM	CONDITION	DATA (DC Voltage)
22 23 41 42	G/B R/B L/B Y/B	Injector No. 3 Injector No. 1 Injector No. 4 Injector No. 2	**[Engine is running]** ● **Warm-up condition** ● Idle speed **NOTE:** The pulse cycle changes depending on rpm at idle.	BATTERY VOLTAGE (11 - 14V)★ 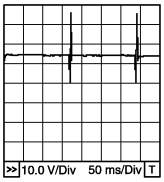 PBIB0529E
			[Engine is running] ● **Warm-up condition** ● Engine speed is 2,000 rpm	BATTERY VOLTAGE (11 - 14V)★ 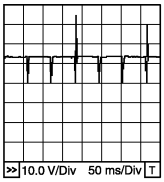 PBIB0530E

★: Average voltage for pulse signal (Actual pulse signal can be confirmed by oscilloscope.)

Diagnostic Procedure

ABS00D8Z

1. INSPECTION START

Turn ignition switch to START.

Is any cylinder ignited?

Yes or No

Yes >> GO TO 2.

No >> GO TO 3.

2. CHECK OVERALL FUNCTION

With CONSULT-II

1. Start engine.
2. Perform “POWER BALANCE” in “ACTIVE TEST” mode with CONSULT-II.
3. Make sure that each circuit produces a momentary engine speed drop.

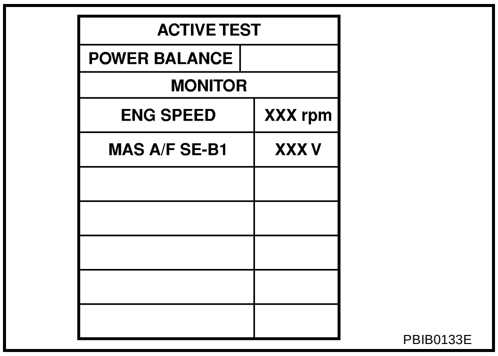

ACTIVE TEST	
POWER BALANCE	
MONITOR	
ENG SPEED	XXX rpm
MAS A/F SE-B1	XXX V

PBIB0133E

Without CONSULT-II

1. Start engine.
2. Listen to each injector operating sound.
   Clicking noise should be heard.

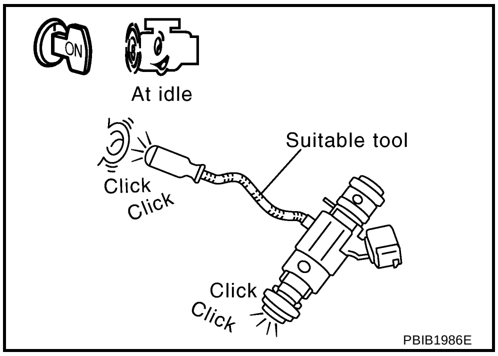

PBIB1986E

<u>OK or NG</u>

OK >> **INSPECTION END**
NG >> GO TO 3.

3. CHECK INJECTOR POWER SUPPLY CIRCUIT

1. Turn ignition switch OFF.
2. Disconnect injector harness connector.
3. Turn ignition switch ON.

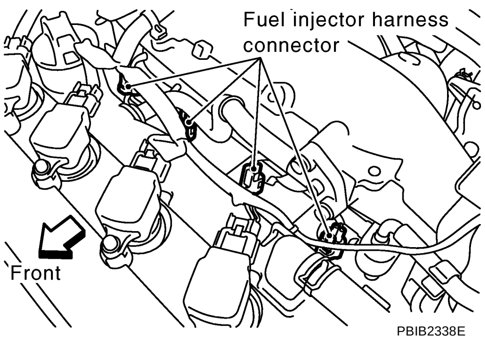

PBIB2338E

4. Check voltage between injector terminal 1 and ground with CONSULT-II or tester.

Voltage: Battery voltage

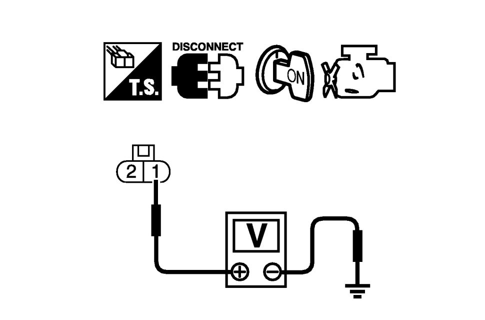

PBIB0582E

OK or NG

OK >> GO TO 5.
NG >> GO TO 4.

4. DETECT MALFUNCTIONING PART

Check the following.

- Harness connectors M61, F41
- Harness connectors F1, F101
- Fuse block (J/B) connector M1
- 10A fuse
- Harness for open or short between injector and fuse

>> Repair open circuit or short to ground or short to power in harness or connectors.

5. CHECK INJECTOR OUTPUT SIGNAL CIRCUIT FOR OPEN AND SHORT

1. Turn ignition switch OFF.
2. Disconnect ECM harness connector.
3. Check harness continuity between injector terminal 2 and ECM terminals 22, 23, 41, 42. Refer to Wiring Diagram.

Continuity should exist.

4. Also check harness for short to ground and short to power in harness or connectors.

OK or NG

OK >> GO TO 7.
NG >> GO TO 6.

6. DETECT MALFUNCTIONING PART

Check the following.

- Harness connectors F101, F1
- Harness for open or short between injector and ECM

>> Repair open circuit or short to ground or short to power in harness or connectors.

7. CHECK INJECTOR

Refer to EC-612, "Component Inspection" .

OK or NG

OK >> GO TO 8.
NG >> Replace injector.

8. CHECK INTERMITTENT INCIDENT

Refer to EC-153, "TROUBLE DIAGNOSIS FOR INTERMITTENT INCIDENT" .

>> **INSPECTION END**

Component Inspection

ABS00CZ8

INJECTOR

1. Disconnect injector harness connector.
2. Check resistance between terminals as shown in the figure.

Resistance: 13.5 - 17.5Ω [at 10 - 60°C (50 - 140°F)]

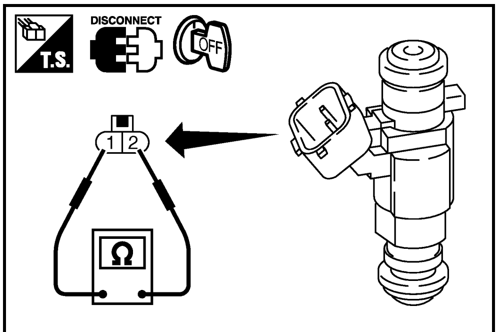

PBIB1727E

Removal and Installation

ABS00CZ9

INJECTOR

Refer to EM-30, "FUEL INJECTOR AND FUEL TUBE" .

FUEL PUMP CIRCUIT

PFP:17042

Description

ABS00CZA

SYSTEM DESCRIPTION

Sensor	Input Signal to ECM	ECM Function	Actuator
Crankshaft position sensor (POS) Camshaft position sensor (PHASE)	Engine speed*	Fuel pump control	Fuel pump relay
Battery	Battery voltage*		

*: ECM determines the start signal status by the signals of engine speed and battery voltage.

The ECM activates the fuel pump for 1 second after the ignition switch is turned ON to improve engine start-ability. If the ECM receives a engine speed signal from the camshaft position sensor (PHASE), it knows that the engine is rotating, and causes the pump to operate. If the engine speed signal is not received when the ignition switch is ON, the engine stalls. The ECM stops pump operation and prevents battery discharging, thereby improving safety. The ECM does not directly drive the fuel pump. It controls the ON/OFF fuel pump relay, which in turn controls the fuel pump.

Condition	Fuel pump operation
Ignition switch is turned to ON.	Operates for 1 second.
Engine running or cranking	Operates.
When engine is stopped	Stops in 1.5 seconds.
Except as shown above	Stops.

COMPONENT DESCRIPTION

A turbine type design fuel pump is used in the furl tank.

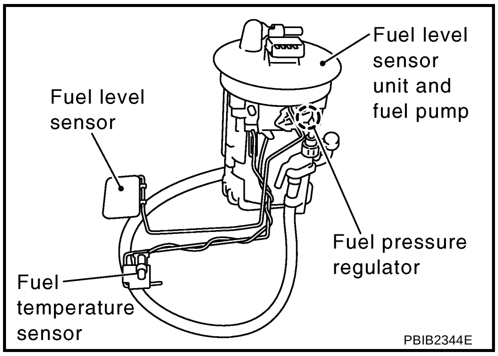

CONSULT-II Reference Value in Data Monitor Mode

ABS00CZB

Specification data are reference values.

MONITOR ITEM	CONDITION	SPECIFICATION
FUEL PUMP RLY	• For 1 seconds after turning ignition switch ON • Engine running or cranking	ON
	• Except above conditions	OFF

Wiring Diagram

ABS00CZC

EC-F/PUMP-01

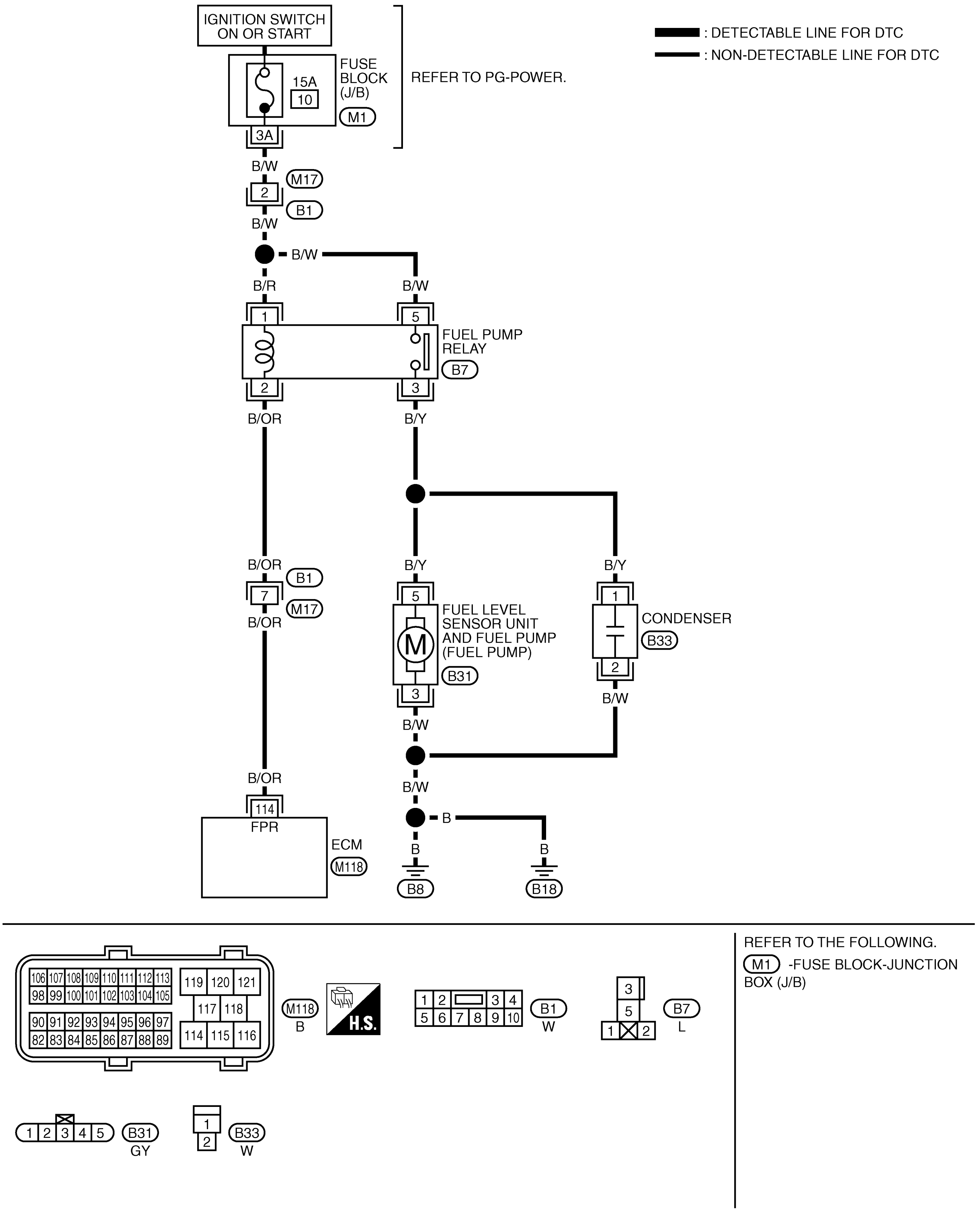

TBWA0632E

Specification data are reference values and are measured between each terminal and ground.

CAUTION:

Do not use ECM ground terminals when measuring input/output voltage. Doing so may result in damage to the ECM's transistor. Use a ground other than ECM terminals, such as the ground.

TERMINAL NO.	WIRE COLOR	ITEM	CONDITION	DATA (DC Voltage)
114	B/OR	Fuel pump relay	**[Ignition switch: ON]** ● For 1 second after turning ignition switch ON **[Engine is running]**	0 - 1.0V
			[Ignition switch: ON] ● More than 1 second after turning ignition switch ON	BATTERY VOLTAGE (11 - 14V)

Diagnostic Procedure

ABS00D90

1. CHECK OVERALL FUNCTION

1. Turn ignition switch ON.
2. Pinch fuel feed hose with two fingers.
   Fuel pressure pulsation should be felt on the fuel hose for 1 second after ignition switch is turned ON.

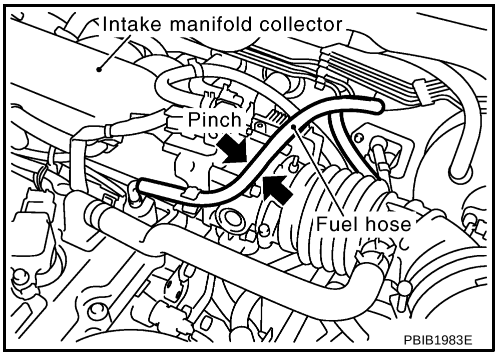

PBIB1983E

OK or NG

OK >> **INSPECTION END**
NG >> GO TO 2.

2. CHECK FUEL PUMP RELAY POWER SUPPLY CIRCUIT

1. Turn ignition switch OFF.
2. Disconnect fuel pump relay.
3. Turn ignition switch ON.

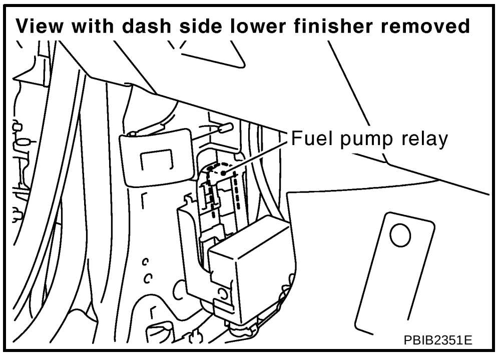

PBIB2351E

4. Check voltage between fuel pump relay terminals 1, 5 and ground with CONSULT-II or tester.

   Voltage: Battery voltage

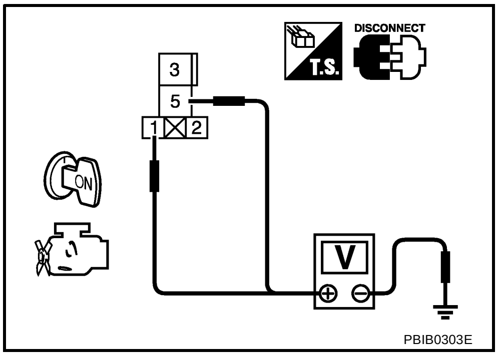

PBIB0303E

OK or NG

OK >> GO TO 4.
NG >> GO TO 3.

3. DETECT MALFUNCTIONING PART

Check the following.

- Harness connectors M17, B1
- Fuse block (J/B) connector M1
- 15A fuse
- Harness for open or short between fuel pump relay and fuse

>> Repair open circuit or short to ground or short to power in harness or connectors.

4. CHECK CONDENSER CIRCUIT FOR OPEN AND SHORT

1. Turn ignition switch OFF.
2. Disconnect condenser harness connector.
3. Check harness continuity between the following;
   fuel pump relay terminal 3 and condenser terminal 1,
   condenser terminal 2 and ground.
   Refer to Wiring Diagram.

   Continuity should exist.

4. Also check harness for short to ground and short to power.

OK or NG

OK >> GO TO 6.
NG >> GO TO 5.

5. DETECT MALFUNCTIONING PART

Check the following.

- Harness for open or short between fuel pump relay and condenser
- Harness for open or short between condenser and ground

>> Repair open circuit or short to ground or short to power in harness connectors.

6. CHECK CONDENSER

Refer to EC-618, "Component Inspection" .

OK or NG

OK >> GO TO 7.
NG >> Replace condenser.

7. CHECK FUEL PUMP POWER SUPPLY AND GROUND CIRCUIT FOR OPEN AND SHORT

1. Disconnect “fuel level sensor unit and fuel pump” harness connector.
2. Check harness continuity between the following;
   fuel pump relay terminal 3 and “fuel level sensor unit and fuel pump” terminal 5,
   “fuel level sensor unit and fuel pump” terminal 3 and ground.
   Refer to Wiring Diagram.

   Continuity should exist.

3. Also check harness for short to ground and short to power.

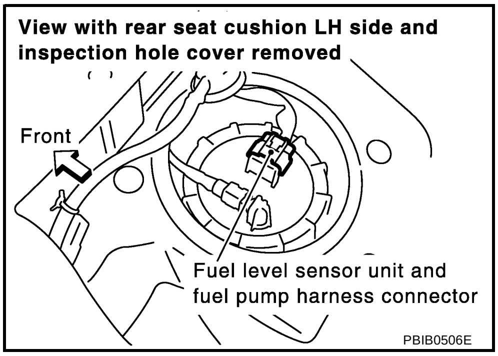

OK or NG

OK >> GO TO 9.
NG >> GO TO 8.

8. DETECT MALFUNCTIONING PART

Check the following.

- Harness for open or short between fuel pump relay and “fuel level sensor unit and fuel pump”
- Harness for open or short between “fuel level sensor unit and fuel pump” and ground

>> Repair open circuit or short to ground or short to power in harness connectors.

9. CHECK FUEL PUMP RELAY OUTPUT SIGNAL CIRCUIT FOR OPEN AND SHORT

1. Disconnect ECM harness connector.
2. Check harness continuity between fuel pump relay terminal 2 and ECM terminal 114.
   Refer to Wiring Diagram.

   Continuity should exist.

3. Also check harness for short to ground and short to power.

OK or NG

OK >> GO TO 11.
NG >> GO TO 10.

10. DETECT MALFUNCTIONING PART

Check the following.

- Harness connectors B1, M17
- Harness for open or short between fuel pump relay and ECM

>> Repair open circuit or short to ground or short to power in harness or connectors.

11. CHECK FUEL PUMP RELAY

Refer to EC-618, "Component Inspection" .

OK or NG

OK >> GO TO 12.
NG >> Replace fuel pump relay.

12. CHECK FUEL PUMP

Refer to EC-618, "Component Inspection" .

OK or NG

OK >> GO TO 13.
NG >> Replace fuel pump.

13. CHECK INTERMITTENT INCIDENT

Refer to EC-153, "TROUBLE DIAGNOSIS FOR INTERMITTENT INCIDENT" .

>> **INSPECTION END**

Component Inspection

ABS00CZE

FUEL PUMP RELAY

Check continuity between terminals 3 and 5 under the following conditions.

Conditions	Continuity
12V direct current supply between terminals 1 and 2	Yes
No current supply	No

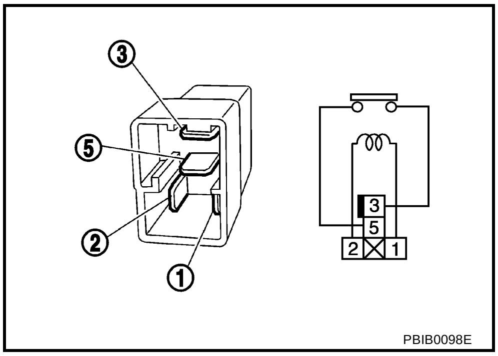

PBIB0098E

FUEL PUMP

1. Disconnect “fuel level sensor unit and fuel pump” harness connector.

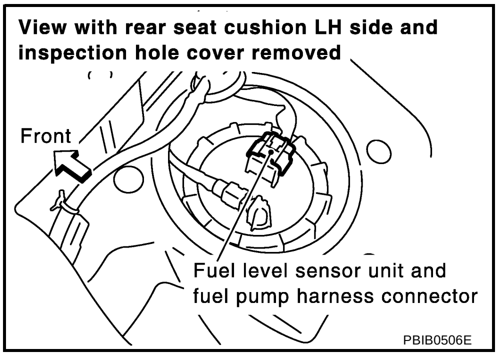

PBIB0506E

2. Check resistance between “fuel level sensor unit and fuel pump” terminals **3** and **5** .

   Resistance: Approximately: 0.2 - 5.0Ω[at 25°C (77°F)]

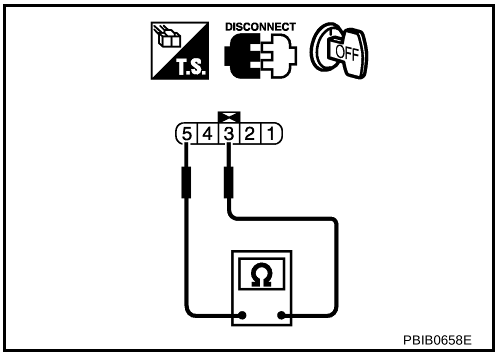

PBIB0658E

CONDENSER

1. Turn ignition switch OFF.
2. Disconnect condenser harness connector.
3. Check resistance between condenser terminals 1 and 2.

   Resistance: Above 1MΩ [at 25°C (77°F)]

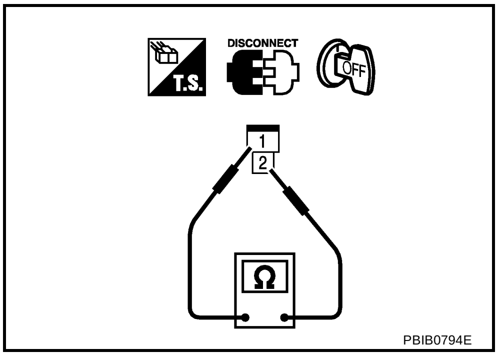

PBIB0794E

Removal and Installation

ABS00CZF

FUEL PUMP

Refer to FL-4, "FUEL LEVEL SENSOR UNIT, FUEL FILTER AND FUEL PUMP ASSEMBLY" .

REFRIGERANT PRESSURE SENSOR

PFP:92136

Component Description

ABS00CZG

The refrigerant pressure sensor is installed at the liquid tank of the air conditioner system. The sensor uses an electrostatic volume pressure transducer to convert refrigerant pressure to voltage. The voltage signal is sent to ECM, and ECM controls cooling fan system.

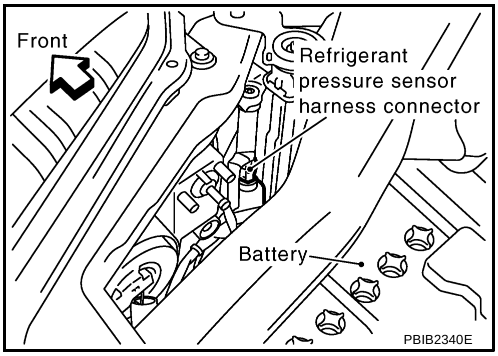

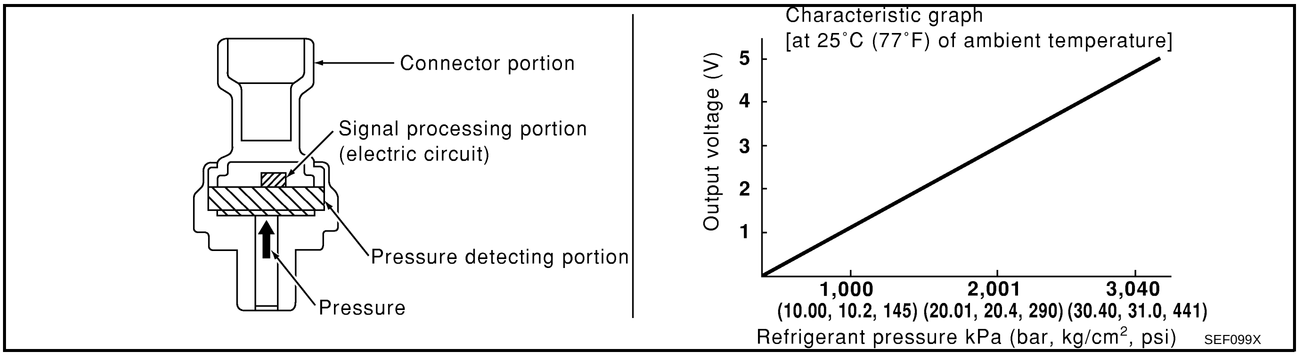

Wiring Diagram

ABS00CZH

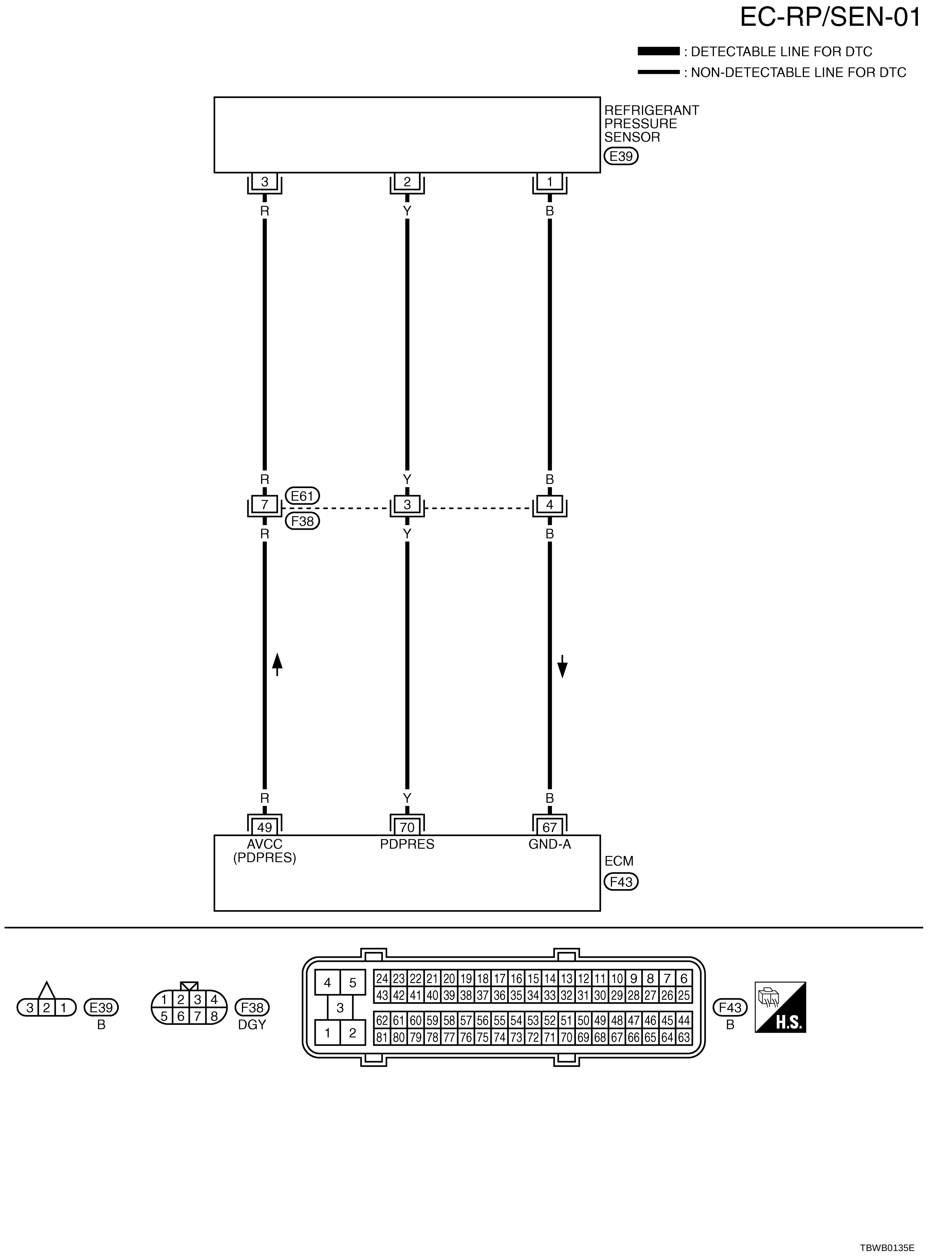

Specification data are reference values and are measured between each terminal and ground.

CAUTION:
Do not use ECM ground terminals when measuring input/output voltage. Doing so may result in damage to the ECM's transistor. Use a ground other than ECM terminals, such as the ground.

TERMINAL NO.	WIRE COLOR	ITEM	CONDITION	DATA (DC Voltage)
49	R	Sensor power supply (Refrigerant pressure sensor)	**[Ignition switch: ON]**	Approximately 5V
67	B	Sensor ground	**[Engine is running]** ● **Warm-up condition** ● Idle speed	Approximately 0V
70	Y	Refrigerant pressure sensor	**[Engine is running]** ● **Warm-up condition** ● Both A/C switch and blower switch are ON (Compressor operates.)	1.0 - 4.0V

Diagnostic Procedure

ABS00D91

1. CHECK REFRIGERANT PRESSURE SENSOR OVERALL FUNCTION

1. Start engine and warm it up to normal operating temperature.
2. Turn A/C switch and blower switch ON.
3. Check voltage between ECM terminal 70 and ground with CONSULT-II or tester.

Voltage: 1.0 - 4.0V

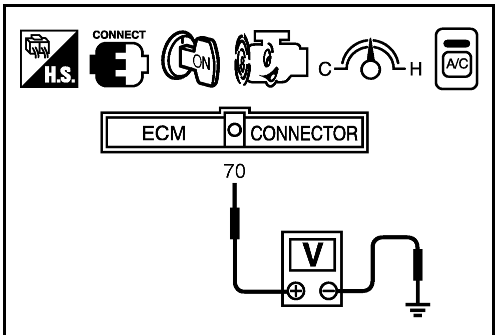

PBIB1205E

OK or NG

OK >> **INSPECTION END**
NG >> GO TO 2.

A C D E F G H I J K L M

EC

2. CHECK GROUND CONNECTIONS

1. Turn A/C switch and blower switch OFF.
2. Stop engine.
3. Turn ignition switch OFF.
4. Loosen and retighten three ground screws on the body.
   Refer to EC-161, "Ground Inspection" .

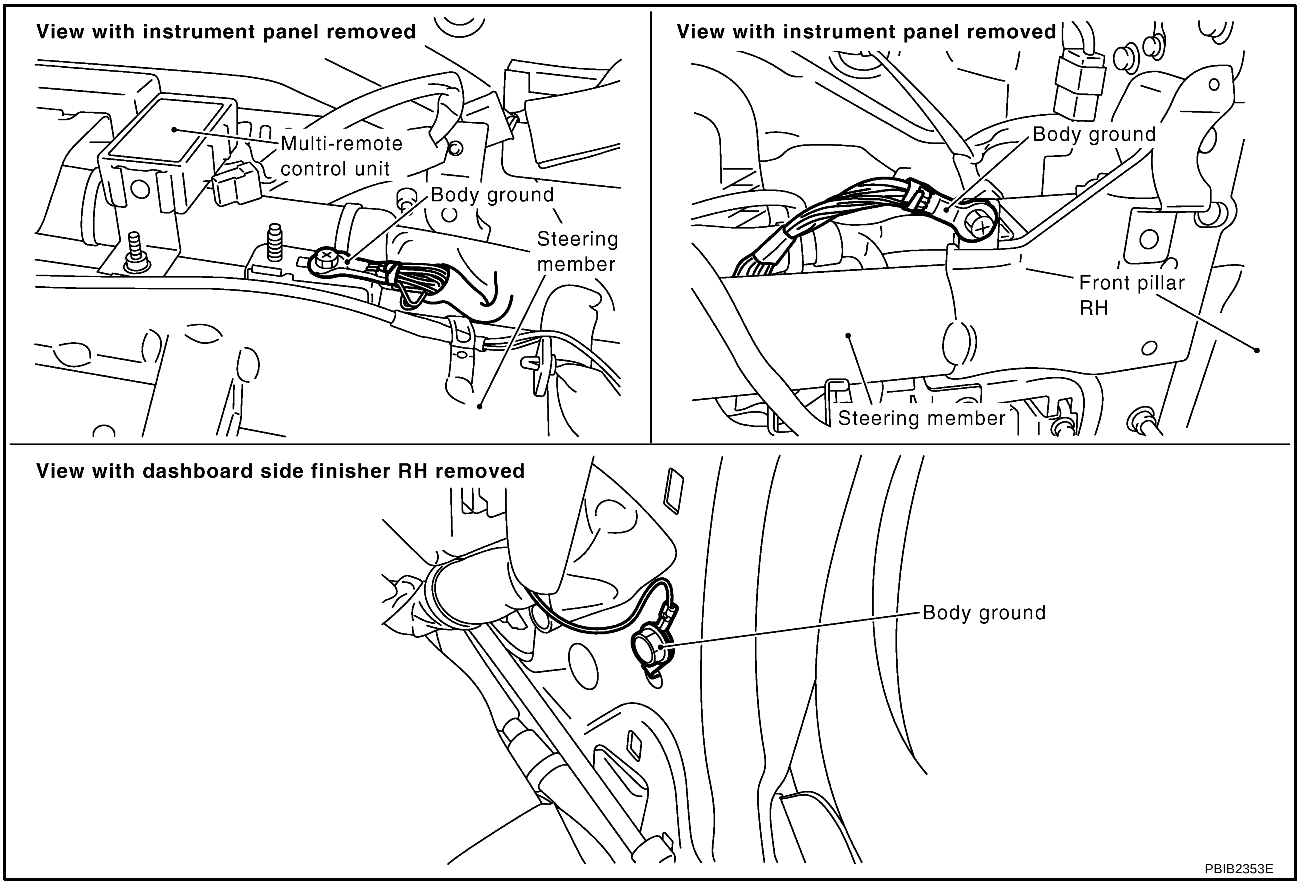

OK or NG

OK >> GO TO 3.

NG >> Repair or replace ground connections.

3. CHECK REFRIGERANT PRESSURE SENSOR POWER SUPPLY CIRCUIT

1. Disconnect refrigerant pressure sensor harness connector.
2. Turn ignition switch ON.

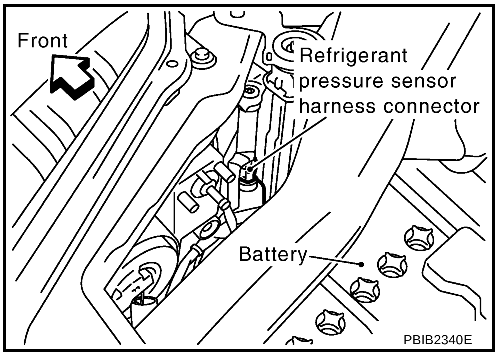

3. Check voltage between refrigerant pressure sensor terminal 3 and ground with CONSULT-II or tester.

Voltage: Approximately 5V

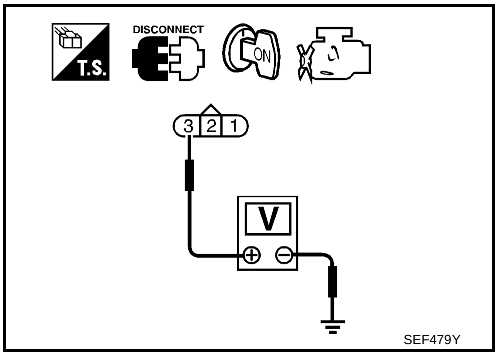

OK or NG

OK >> GO TO 5.
NG >> GO TO 4.

4. DETECT MALFUNCTIONING PART

Check the following.

- Harness connectors E61, F38
- Harness for open or short between refrigerant pressure sensor and ECM

>> Repair open circuit or short to ground or short to power in harness or connectors.

5. CHECK REFRIGERANT PRESSURE SENSOR GROUND CIRCUIT FOR OPEN AND SHORT

1. Turn ignition switch OFF.
2. Disconnect ECM harness connector.
3. Check harness continuity between refrigerant pressure sensor terminal 1 and ECM terminal 67. Refer to Wiring Diagram.

Continuity should exist.

4. Also check harness for short to ground and short to power.

OK or NG

OK >> GO TO 7.
NG >> GO TO 6.

6. DETECT MALFUNCTIONING PART

Check the following.

- Harness connectors E61, F38
- Harness for open or short between refrigerant pressure sensor and ECM

>> Repair open circuit or short to ground or short to power in harness or connectors.

7. CHECK REFRIGERANT PRESSURE SENSOR INPUT SIGNAL CIRCUIT FOR OPEN AND SHORT

1. Check harness continuity between refrigerant pressure sensor terminal 2 and ECM terminal 70.
   Refer to Wiring Diagram.

   Continuity should exist.

2. Also check harness for short to ground and short to power.

OK or NG

OK >> GO TO 9.
NG >> GO TO 8.

8. DETECT MALFUNCTIONING PART

Check the following.

- Harness connectors E61, F38
- Harness for open or short between refrigerant pressure sensor and ECM

>> Repair open circuit or short to ground or short to power in harness or connectors.

9. CHECK INTERMITTENT INCIDENT

Refer to EC-153, "TROUBLE DIAGNOSIS FOR INTERMITTENT INCIDENT" .

OK or NG

OK >> Replace refrigerant pressure sensor.
NG >> Repair or replace.

Removal and Installation

ABS00CZJ

REFRIGERANT PRESSURE SENSOR

Refer to ATC-131, "Removal and Installation of Refrigerant Pressure Sensor" (with auto A/C models) or MTC-90, "Removal and Installation for Refrigerant Pressure Sensor" (with manual A/C models).

ELECTRICAL LOAD SIGNAL

PFP:25350

CONSULT-II Reference Value in Data Monitor Mode

ABS00DAK

Specification data are reference values.

MONITOR ITEM	CONDITION		SPECIFICATION
LOAD SIGNAL	● Ignition switch: ON	Rear window defogger switch is ON and/or lighting switch is in 1st or 2ndand/or heater fan switch is ON.	ON
		Rear window defogger switch is OFF and lighting switch is OFF and heater fan switch is OFF.	OFF

Wiring Diagram

ABS00DAL

HEADLAMP

EC-LOAD-01

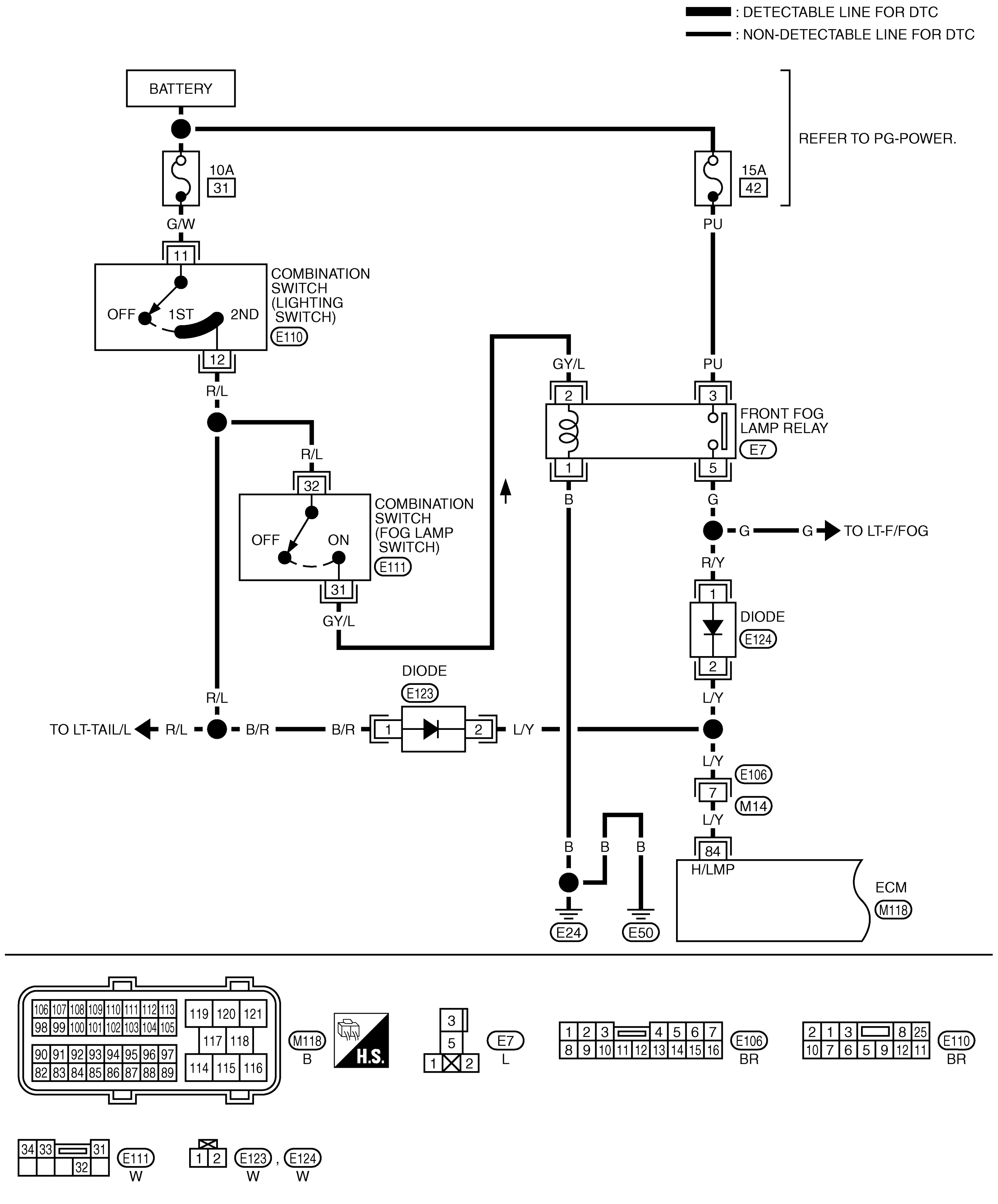

TBWB0136E

Specification data are reference values and are measured between each terminal and ground.

CAUTION:

Do not use ECM ground terminals when measuring input/output voltage. Doing so may result in damage to the ECM's transistor. Use a ground other than ECM terminals, such as the ground.

TERMINAL NO.	WIRE COLOR	ITEM	CONDITION	DATA (DC Voltage)
84	L/Y	Electrical load signal (Headlamp signal)	**[Lighting switch: ON]** ● Lighting switch: 1st or 2nd position	BATTERY VOLTAGE (11 - 14V)
			[Lighting switch: ON] ● Lighting switch: OFF	Approximately 0V

Diagnostic Procedure

ABS00DAM

1. INSPECTION START

Do you have CONSULT-II?

Yes or No

Yes >> GO TO 2.
No >> GO TO 6.

2. CHECK HEADLAMP CIRCUIT OVERALL FUNCTION-I

With CONSULT-II

1. Turn ignition switch ON.
2. Check “LOAD SIGNAL” in “DATA MONITOR” mode with CONSULT-II under the following conditions.

Condition	LOAD SIGNAL
Lighting switch: ON at 1st or 2nd	ON
Lighting switch: OFF	OFF

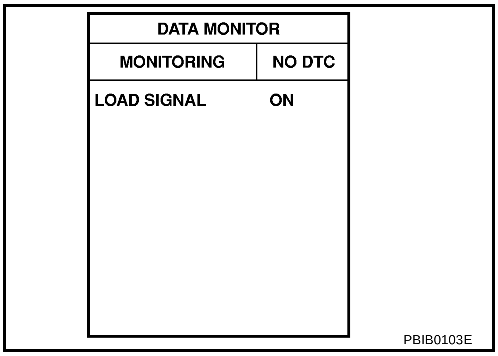

OK or NG

OK >> GO TO 4.
NG >> GO TO 3.

3. CHECK HEADLAMP FUNCTION

1. Start engine.
2. Check that headlamps are illuminated.

OK or NG

OK >> GO TO 10.
NG >> Refer to LT-4, "HEADLAMP - DAYTIME LIGHT SYSTEM -" .

4. CHECK HEADLAMP CIRCUIT OVERALL FUNCTION-II

With CONSULT-II

1. Turn ignition switch OFF.
2. Disconnect DIODE E123 connector.
3. Turn ignition switch ON.
4. Turn lighting switch ON at 1st or 2nd.

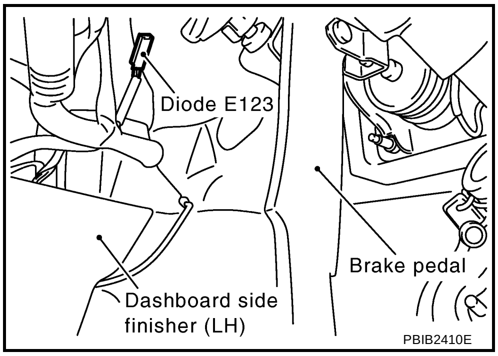

5. Check "LOAD SIGNAL" in "DATA MONITOR" mode with CONSULT-II under the following conditions.

Condition	LOAD SIGNAL
Fog lamp switch: ON	ON
Fog lamp switch: OFF	OFF

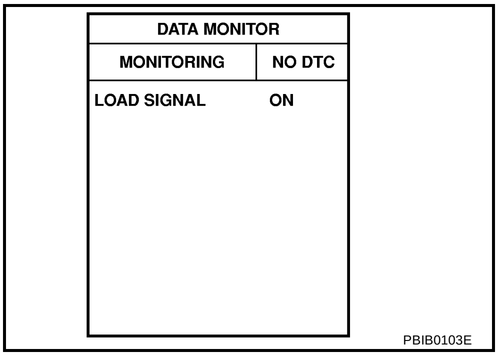

OK or NG

OK >> **INSPECTION END.**
NG >> GO TO 5.

5. CHECK FRONT FOG LAMP FUNCTION

1. Turn lighting switch ON at 1st or 2nd.
2. Turn fog lamp switch ON.
3. Check that front fog lamps are illuminated.

OK or NG

OK >> GO TO 12.
NG >> Refer to LT-36, "FRONT FOG LAMP" .

6. CHECK HEADLAMP CIRCUIT OVERALL FUNCTION-I

Without CONSULT-II

1. Turn ignition switch ON.
2. Check voltage between ECM terminal 84 and ground under the following conditions.

Condition	Voltage
Lighting switch: ON at 1st or 2nd	BATTERY VOLTAGE
Lighting switch: OFF	0V

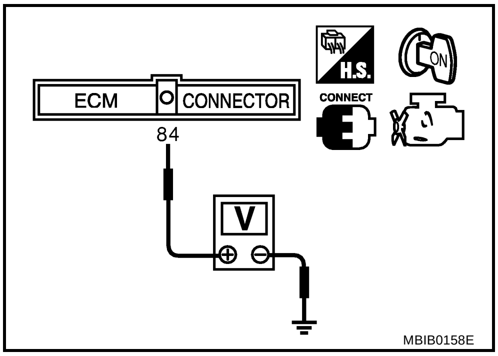

OK or NG

OK >> GO TO 8.
NG >> GO TO 7.

7. CHECK HEADLAMP FUNCTION

1. Start engine.
2. Check that headlamps are illuminated.

OK or NG

OK >> GO TO 10.
NG >> Refer to LT-4, "HEADLAMP - DAYTIME LIGHT SYSTEM -" .

8. CHECK HEADLAMP CIRCUIT OVERALL FUNCTION-II

Without CONSULT-II

1. Turn ignition switch OFF.
2. Disconnect DIODE E123 connector
3. Turn ignition switch ON
4. Turn lighting switch ON at 1st or 2nd.

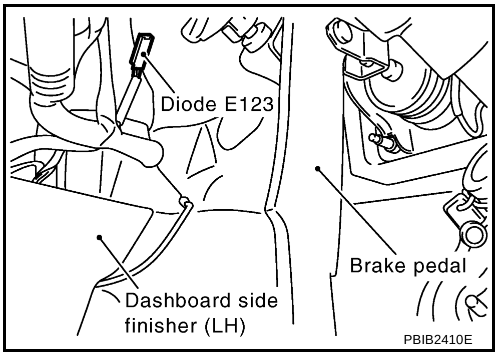

5. Check voltage between ECM terminal 84 and ground under the following conditions.

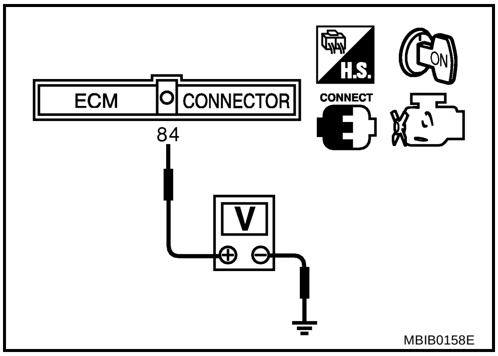

Condition	Voltage
Fog lamp switch: ON	BATTERY VOLTAGE
Fog lamp switch: OFF	0V

OK or NG

OK >> **INSPECTION END.**
NG >> GO TO 9.

9. CHECK FRONT FOG LAMP FUNCTION

1. Turn lighting switch ON at 1st or 2nd.
2. Turn fog lamp switch ON.
3. Check that front fog lamps are illuminated.

OK or NG

OK >> GO TO 12.
NG >> Refer to LT-36, "FRONT FOG LAMP" .

10. CHECK HEADLAMP INPUT SIGNAL CIRCUIT FOR OPEN AND SHORT

1. Stop engine.
2. Turn lighting switch OFF
3. Turn ignition switch OFF.
4. Disconnect ECM harness connector and lighting switch harness connector.
5. Check harness continuity between ECM terminal 84 and lighting switch terminal 12 under the following conditions.

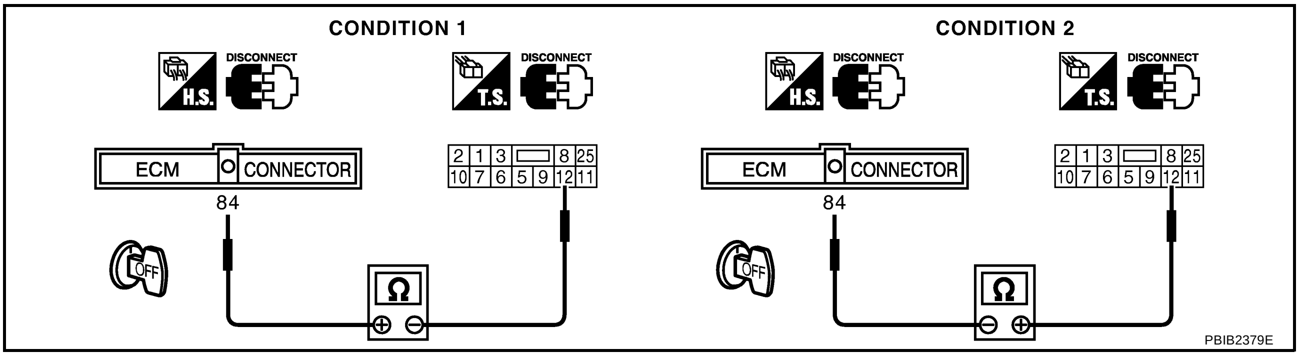

Condition	Continuity
1	Should exist
2	Should not exist

6. Also check harness for short to ground and short to power.

OK or NG

OK >> GO TO 14.
NG >> GO TO 11.

11. DETECT MALFUNCTIONING PART

Check the following.

- Harness connectors E106, M14
- DIODE E123
- Harness for open and short between ECM and lighting switch

>> Repair open circuit or short to ground or short to power in harness or connectors.

12. CHECK FOG LAMP INPUT SIGNAL CIRCUIT FOR OPEN AND SHORT

1. Stop engine.
2. Turn lighting switch OFF.
3. Turn fog lamp switch OFF.
4. Disconnect ECM harness connector and front fog lamp relay.
5. Check harness continuity between ECM terminal 84 and front fog lamp relay terminal 5 under the following conditions.

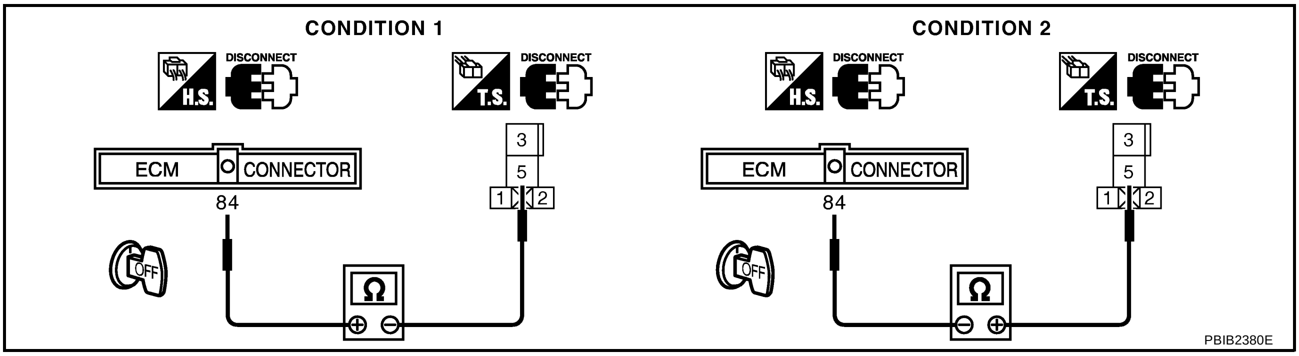

Condition	Continuity
1	Should exist
2	Should not exist

6. Also check harness for short to ground and short to power.

OK or NG

OK >> GO TO 14.
NG >> GO TO 13.

13. DETECT MALFUNCTIONING PART

Check the following.

- Harness connectors E106, M14
- DIODE E124
- Harness for open and short between ECM and front fog lamp relay

>> Repair open circuit or short to ground or short to power in harness or connectors.

14. CHECK INTERMITTENT INCIDENT

Perform EC-153, "TROUBLE DIAGNOSIS FOR INTERMITTENT INCIDENT" .

>> **INSPECTION END**

Wiring Diagram

ABS00DCZ

HEATER FAN

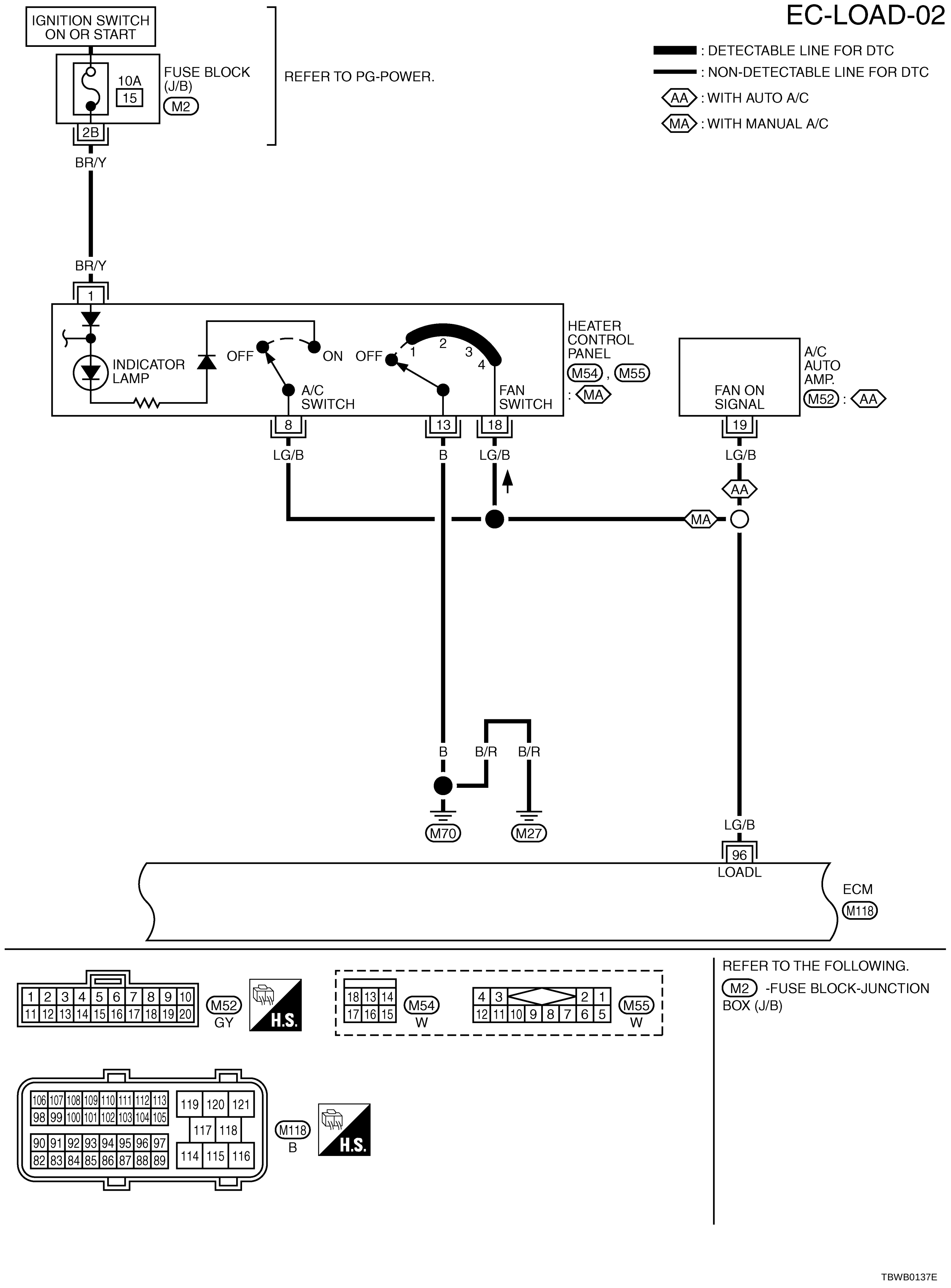

TBWB0137E

Specification data are reference values and are measured between each terminal and ground.

CAUTION:

Do not use ECM ground terminals when measuring input/output voltage. Doing so may result in damage to the ECM's transistor. Use a ground other than ECM terminals, such as the ground.

TERMINAL NO.	WIRE COLOR	ITEM	CONDITION	DATA (DC Voltage)
96	LG/B	Heater fan switch	**[Engine is running]** • Heater fan switch: ON	Approximately 0V
			[Engine is running] • Heater fan switch: OFF	BATTERY VOLTAGE (11 - 14V)

Diagnostic Procedure

ABS00DD0

1. INSPECTION START

Do you have CONSULT-II?

Yes or No

Yes >> GO TO 2.
No >> GO TO 3.

2. CHECK HEATER FAN CIRCUIT OVERALL FUNCTION

With CONSULT-II

1. Turn ignition switch ON.
2. Check “LOAD SIGNAL” in “DATA MONITOR” mode with CONSULT-II under the following conditions.

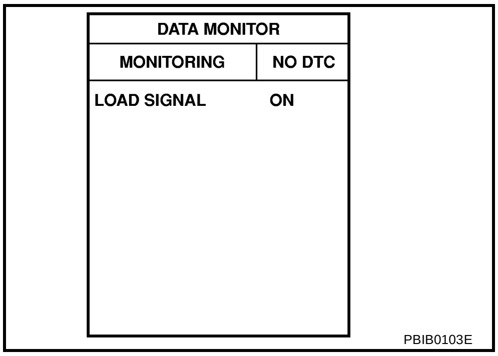

PBIB0103E

Condition	LOAD SIGNAL
Heater fan switch: ON in any position	ON
Heater fan switch: OFF	OFF

OK or NG

OK >> **INSPECTION END.**
NG >> GO TO 4.

3. CHECK HEATER FAN CIRCUIT OVERALL FUNCTION

Without CONSULT-II

1. Turn ignition switch ON.
2. Check voltage between ECM terminal 96 and ground under the following conditions.

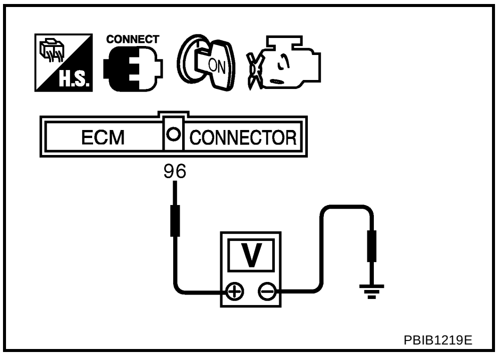

PBIB1219E

Condition	Voltage
Heater fan switch: ON in any position	Approximately 0V
Heater fan switch: OFF	BATTERY VOLTAGE (11 -14V)

OK or NG

OK >> **INSPECTION END.**
NG >> GO TO 4.

4. CHECK HEATER FAN SWITCH FUNCTION

1. Start engine.
2. Turn heater fan switch ON in any position.
3. Check that heater fan turns properly.

OK or NG

OK >> GO TO 5.
NG >> Refer to ATC-32, "TROUBLE DIAGNOSIS" (with auto A/C models) or MTC-28, "TROUBLE DIAGNOSIS" (with manual A/C models).

5. CHECK HEATER FAN INPUT SIGNAL CIRCUIT FOR OPEN AND SHORT

1. Stop engine.
2. Turn heater fan switch OFF.
3. Turn ignition switch OFF.
4. Disconnect ECM harness connector.
5. Disconnect A/C auto amp. harness connector or heater control panel harness connector.
6. Check harness continuity between the following;
   ECM terminal 96 and A/C auto amp. terminal 19 (with auto A/C models),
   ECM terminal 96 and heater control panel terminal 8, 18 (with manual A/C models).
   Refer to Wiring Diagram.

   Continuity should exist.

7. Also check harness for short to ground and short to power.

OK or NG

OK >> GO TO 7.
NG >> GO TO 6.

6. DETECT MALFUNCTIONING PART

Check the following;

- harness for open or short between ECM and A/C auto amp. (with auto A/C models).
- harness for open or short between ECM and heater control panel (with manual A/C models).

>> Repair open circuit or short to ground or short to power in harness or connectors.

7. CHECK INTERMITTENT INCIDENT

Perform EC-153, "TROUBLE DIAGNOSIS FOR INTERMITTENT INCIDENT" .

>> **INSPECTION END**

Wiring Diagram

ABS00DD1

REAR WINDOW DEFOGGER

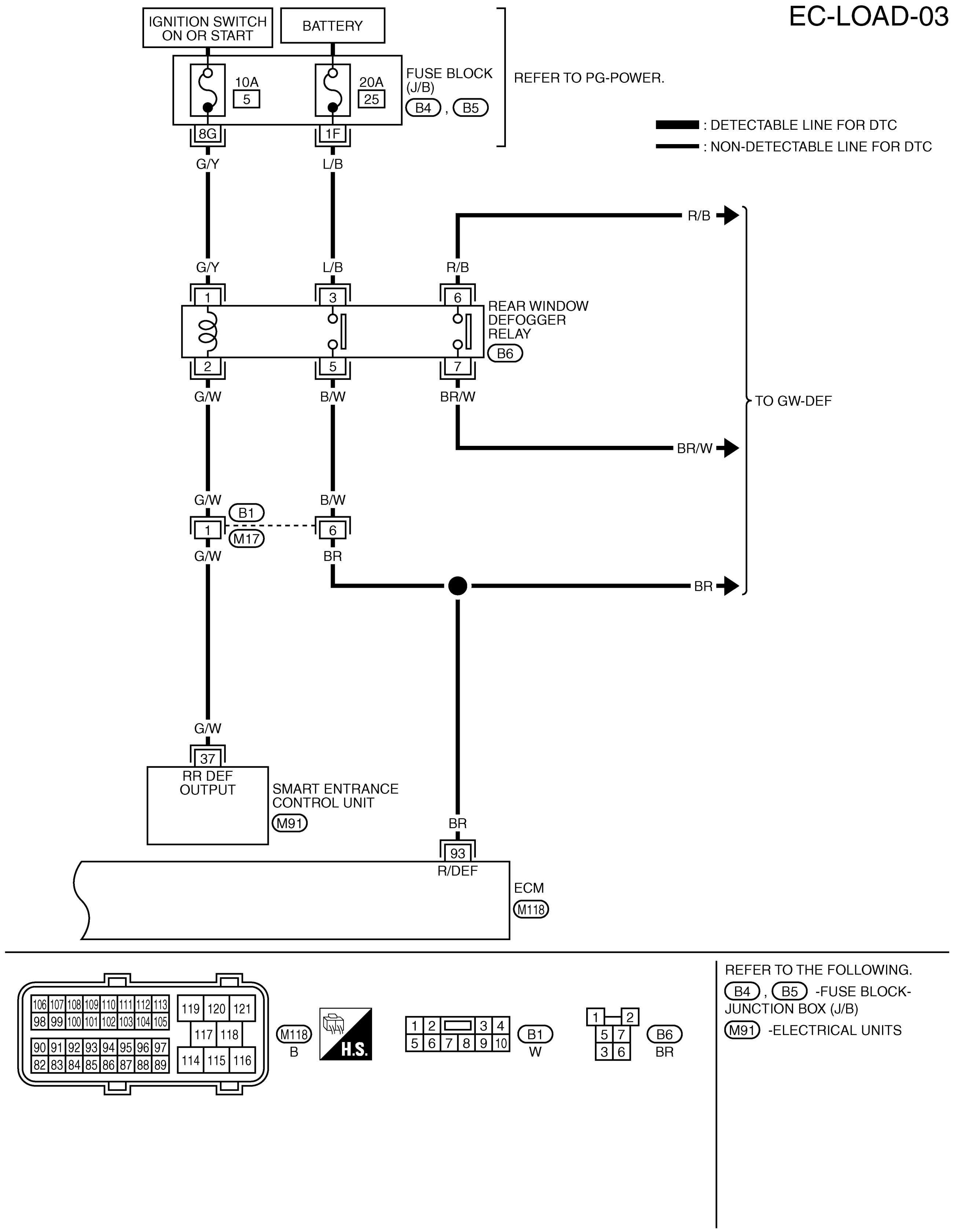

TBWB0138E

Specification data are reference values and are measured between each terminal and ground.

CAUTION:

Do not use ECM ground terminals when measuring input/output voltage. Doing so may result in damage to the ECM's transistor. Use a ground other than ECM terminals, such as the ground.

TERMINAL NO.	WIRE COLOR	ITEM	CONDITION	DATA (DC Voltage)
93	BR	Electrical load signal (Rear window defogger signal)	**[Ignition switch: ON]** ● Rear window defogger switch: ON	BATTERY VOLTAGE (11 - 14V)
			[Ignition switch: ON] ● Rear window defogger switch: OFF	Approximately 0V

Diagnostic Procedure

ABS00DD2

1. INSPECTION START

Do you have CONSULT-II?

Yes or No

Yes >> GO TO 2.
No >> GO TO 3.

2. CHECK REAR WINDOW DEFOGGER CIRCUIT OVERALL FUNCTION

With CONSULT-II

1. Turn ignition switch ON.
2. Check “LOAD SIGNAL” in “DATA MONITOR” mode with CONSULT-II under the following conditions.

Condition	LOAD SIGNAL
Rear window defogger switch: ON	ON
Rear window defogger switch: OFF	OFF

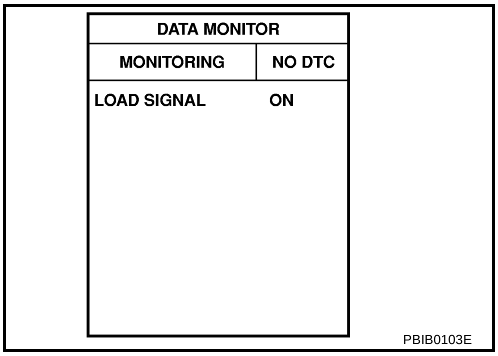

PBIB0103E

OK or NG

OK >> **INSPECTION END**
NG >> GO TO 4.

3. CHECK REAR WINDOW DEFOGGER CIRCUIT OVERALL FUNCTION

Without CONSULT-II

1. Turn ignition switch ON.
2. Check voltage between ECM terminal 93 and ground under the following conditions.

Condition	Voltage
Rear window defogger switch: ON	BATTERY VOLTAGE
Rear window defogger switch: OFF	Approximately 0V

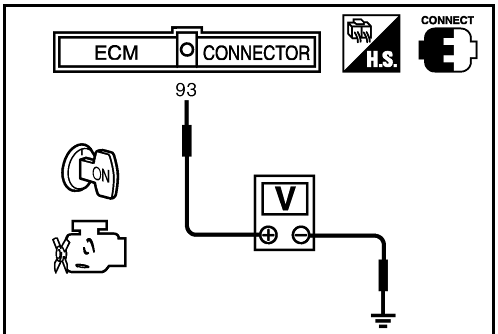

PBIB1773E

OK or NG

OK >> **INSPECTION END**
NG >> GO TO 4.

A
EC
C
D
E
F
G
H
I
J
K
L
M

4. CHECK REAR WINDOW DEFOGGER FUNCTION

1. Turn rear window defogger switch ON.
2. Check the rear windshield. Is the rear windshield heated up?

Yes or No

Yes >> GO TO 5.
No >> Refer to GW-17, "REAR WINDOW DEFOGGER"

5. CHECK REAR WINDOW DEFOGGER INPUT SIGNAL CIRCUIT FOR OPEN AND SHORT

1. Turn rear window defogger switch OFF.
2. Turn ignition switch OFF.
3. Disconnect ECM harness connector and rear window defogger relay.
4. Check harness continuity between ECM terminal 93 and rear window defogger relay terminals 5. Refer to Wiring Diagram.

Continuity should exist.

5. Also check harness for short to ground and short to power.

OK or NG

OK >> GO TO 7.
NG >> GO TO 6.

6. DETECT MALFUNCTIONING PART

Check the following.
- Harness connectors B1, M17
- Harness for open or short between ECM and rear window defogger relay.

>> Repair open circuit or short to ground or short to power in harness or connectors.

7. CHECK INTERMITTENT INCIDENT

Perform EC-153, "TROUBLE DIAGNOSIS FOR INTERMITTENT INCIDENT" .

>> **INSPECTION END**

ASCD BRAKE SWITCH

PFP:25320

Component Description

ABS00CZM

When depress on the brake pedal, ASCD brake switch is turned OFF and stop lamp switch is turned ON. ECM detects the state of the brake pedal by this input of two kinds (ON/OFF signal)
Refer to EC-27, "AUTOMATIC SPEED CONTROL DEVICE (ASCD)" for the ASCD function.

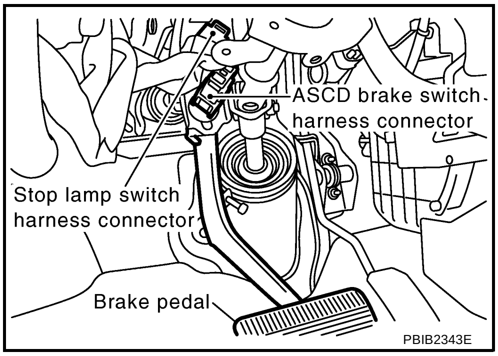

CONSULT-II Reference Value in Data Monitor Mode

ABS00CZN

Specification data are reference values.

MONITOR ITEM	CONDITION		SPECIFICATION
BRAKE SW1 (ASCD brake switch)	● Ignition switch: ON	● Brake pedal: Fully released (A/T) ● Brake pedal and clutch pedal: Fully released (M/T)	ON
		● Brake pedal: Slightly depressed (A/T) ● Brake pedal and/or clutch pedal: Slightly depressed (M/T)	OFF
BRAKE SW2 (STOP lamp switch)	● Ignition switch: ON	Brake pedal: Fully released	OFF
		Brake pedal: Slightly depressed	ON

Wiring Diagram

ABS00CZO

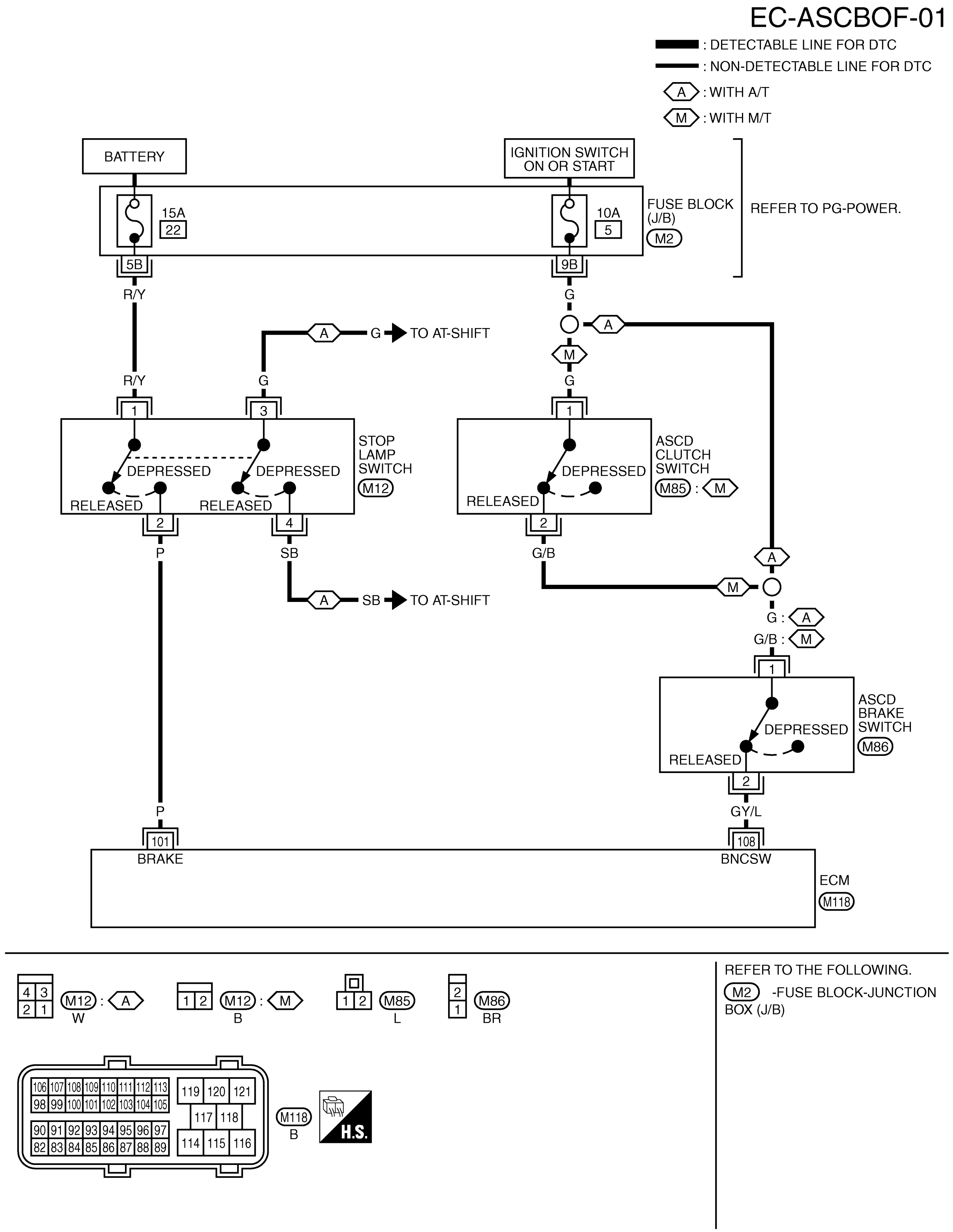

Specification data are reference values and are measured between each terminal and ground.

CAUTION:

Do not use ECM ground terminals when measuring input/output voltage. Doing so may result in damage to the ECM's transistor. Use a ground other than ECM terminals, such as the ground.

TERMINAL NO.	WIRE COLOR	ITEM	CONDITION	DATA (DC Voltage)
101	P	Stop lamp switch	**[Ignition switch: OFF]** ● Brake pedal: Fully released	Approximately 0V
			[Ignition switch: OFF] ● Brake pedal: Slightly depressed	BATTERY VOLTAGE (11 - 14V)
108	GY/L	ASCD brake switch	**[Ignition switch: ON]** ● Brake pedal: Slightly depressed (A/T) ● Brake pedal and/or clutch pedal: Slightly depressed (M/T)	Approximately 0V
			[Ignition switch: ON] ● Brake pedal: Fully released (A/T) ● Brake pedal and clutch pedal: Fully released (M/T)	BATTERY VOLTAGE (11 - 14V)

Diagnostic Procedure

ABS00CZP

1. CHECK OVERALL FUNCTION-I

With CONSULT-II

1. Turn ignition switch ON.
2. Select “BRAKE SW1” in “DATA MONITOR” mode with CONSULT-II.
3. Check “BRAKE SW1” indication under the following conditions.

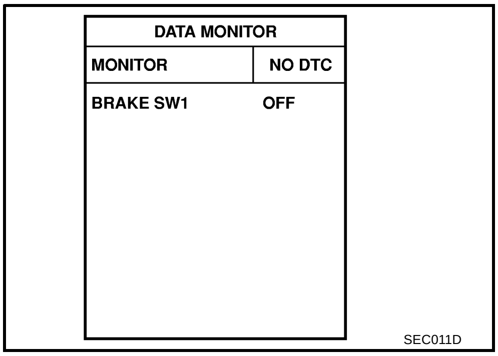

SEC011D

A/T models

CONDITION	INDICATION
Brake pedal: Slightly depressed	OFF
Brake pedal: Fully released	ON

M/T models

CONDITION	INDICATION
Clutch pedal or brake pedal: Slightly depressed	OFF
Clutch pedal and brake pedal: Fully released	ON

Without CONSULT-II

1. Turn ignition switch ON.
2. Check voltage between ECM terminal 108 and ground under the following conditions.

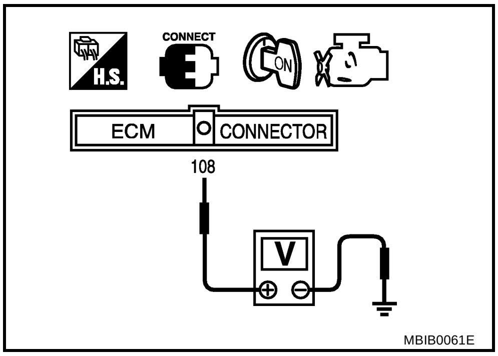

MBIB0061E

A/T models

CONDITION	VOLTAGE
Brake pedal: Slightly depressed	Approximately 0V
Brake pedal: Fully released	Battery voltage

M/T models

CONDITION	VOLTAGE
Clutch pedal or brake pedal: Slightly depressed	Approximately 0V
Clutch pedal and brake pedal: Fully released	Battery voltage

OK or NG

OK >> GO TO 2.
NG (M/T models) >>GO TO 3.
NG (A/T models) >>GO TO 8.

2. CHECK OVERALL FUNCTION-II

With CONSULT-II

Check “BRAKE SW2” indication in “DATA MONITOR” mode.

CONDITION	INDICATION
Brake pedal: Fully released	OFF
Brake pedal: Slightly depressed	ON

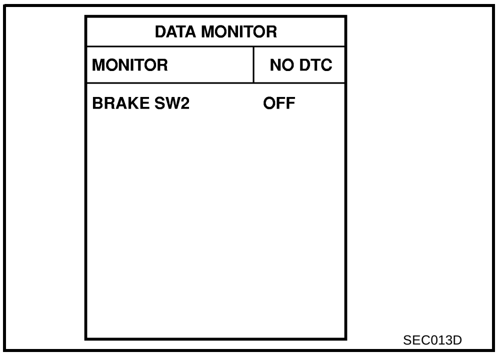

SEC013D

Without CONSULT-II

Check voltage between ECM terminal 101 and ground under the following conditions.

CONDITION	VOLTAGE
Brake pedal: Fully released	Approximately 0V
Brake pedal: Slightly depressed	Battery voltage

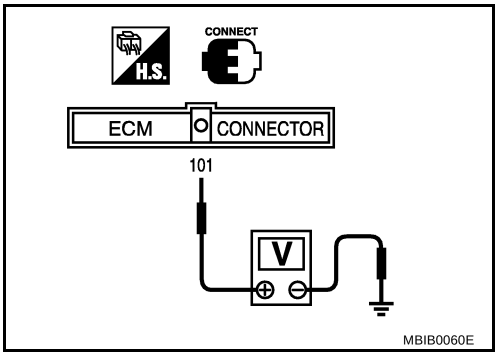

MBIB0060E

OK or NG

OK >> **INSPECTION END**
NG >> GO TO 13.

3. CHECK ASCD CLUTCH SWITCH CIRCUIT

1. Turn ignition switch OFF.
2. Disconnect ASCD brake switch harness connector.
3. Turn ignition switch ON.

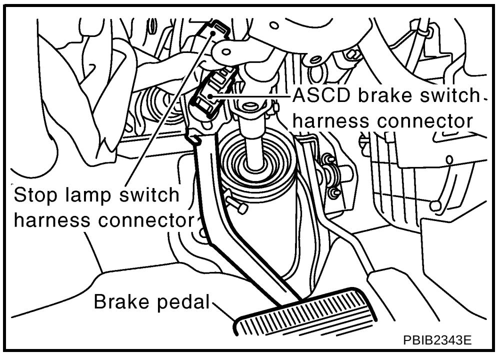

PBIB2343E

4. Check voltage between ASCD brake switch terminal 1 and ground under the following conditions with CONSULT-II or tester.

CONDITION	VOLTAGE
Clutch pedal: Fully released	Battery voltage
Clutch pedal: Slightly depressed	Approx. 0V

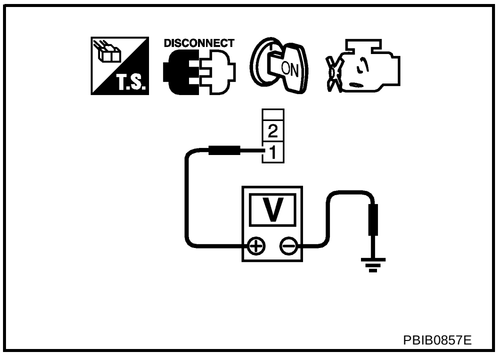

PBIB0857E

OK or NG

OK >> GO TO 10.
NG >> GO TO 4.

4. CHECK ASCD CLUTCH SWITCH POWER SUPPLY CIRCUIT

1. Turn ignition switch OFF.
2. Disconnect ASCD clutch switch harness connector.
3. Turn ignition switch ON.
4. Check voltage between ASCD clutch switch terminal 1 and ground with CONSULT-II or tester.

Voltage: Battery voltage

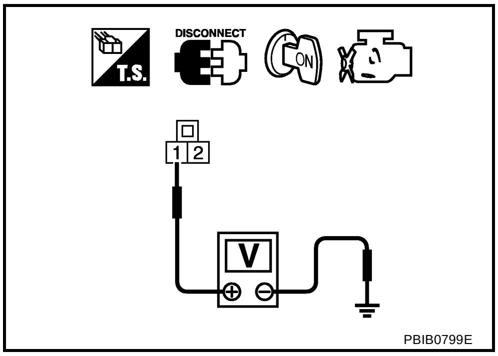

OK or NG

OK >> GO TO 6.
NG >> GO TO 5.

5. DETECT MALFUNCTIONING PART

Check the following.

- Fuse block (J/B) connector M2
- 10A fuse
- Harness for open or short between ASCD clutch switch and fuse

>> Repair open circuit or short to ground or short to power in harness or connectors.

6. CHECK ASCD CLUTCH SWITCH INPUT SIGNAL CIRCUIT FOR OPEN AND SHORT

1. Turn ignition switch OFF.
2. Check harness continuity between ASCD clutch switch terminal 2 and ASCD brake switch terminal 1. Refer to Wiring Diagram.

Continuity should exist.

3. Also check harness for short to ground and short to power.

OK or NG

OK >> GO TO 7.
NG >> Repair open circuit or short to ground or short to power in harness or connectors.

7. CHECK ASCD CLUTCH SWITCH

Refer to EC-646, "Component Inspection"

OK or NG

OK >> GO TO 18.
NG >> Replace ASCD clutch switch.

8. CHECK ASCD BRAKE SWITCH POWER SUPPLY CIRCUIT

1. Turn ignition switch OFF.
2. Disconnect ASCD brake switch harness connector.
3. Turn ignition switch ON.

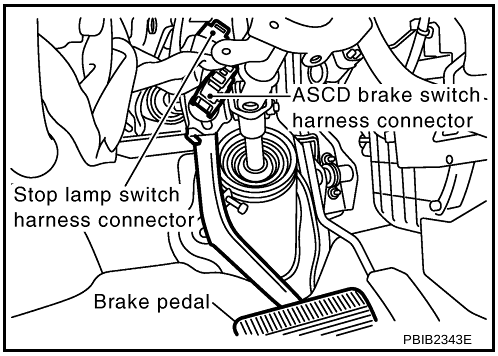

4. Check voltage between ASCD brake switch terminal 1 and ground with CONSULT-II or tester.

Voltage: Battery voltage

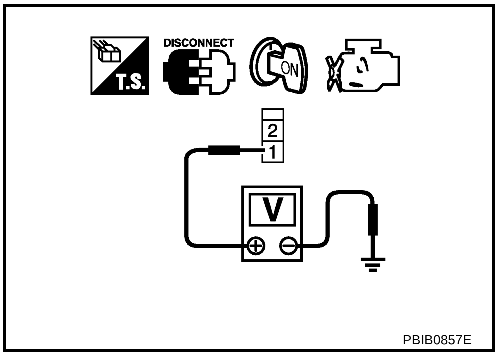

OK or NG

OK >> GO TO 10.
NG >> GO TO 9.

9. DETECT MALFUNCTIONING PART

Check the following.

- Fuse block (J/B) connector M2
- 10A fuse
- Harness for open or short between ASCD brake switch and fuse

>> Repair open circuit or short to ground or short to power in harness or connectors.

10. CHECK ASCD BRAKE SWITCH INPUT SIGNAL CIRCUIT FOR OPEN AND SHORT

1. Turn ignition switch OFF.
2. Disconnect ECM harness connector.
3. Check harness continuity between ECM terminal 108 and ASCD brake switch terminal 2. Refer to Wiring Diagram.

Continuity should exist.

4. Also check harness for short to ground or short to power.

OK or NG

OK >> GO TO 11.
NG >> Repair open circuit or short to ground or short to power in harness or connectors.

11. CHECK ASCD BRAKE SWITCH

Refer to EC-646, "Component Inspection"

OK or NG

OK >> GO TO 16.
NG >> Replace ASCD brake switch.

12. CHECK STOP LAMP SWITCH POWER SUPPLY CIRCUIT

1. Disconnect stop lamp switch harness connector.

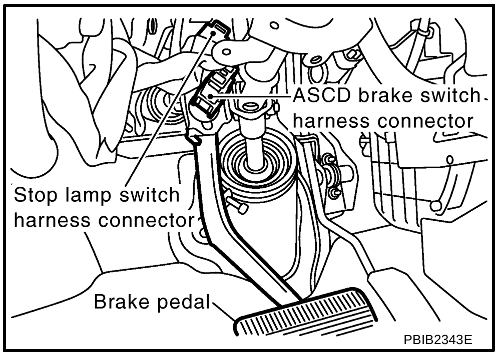

2. Check voltage between stop lamp switch terminal 1 and ground with CONSULT -II or tester.

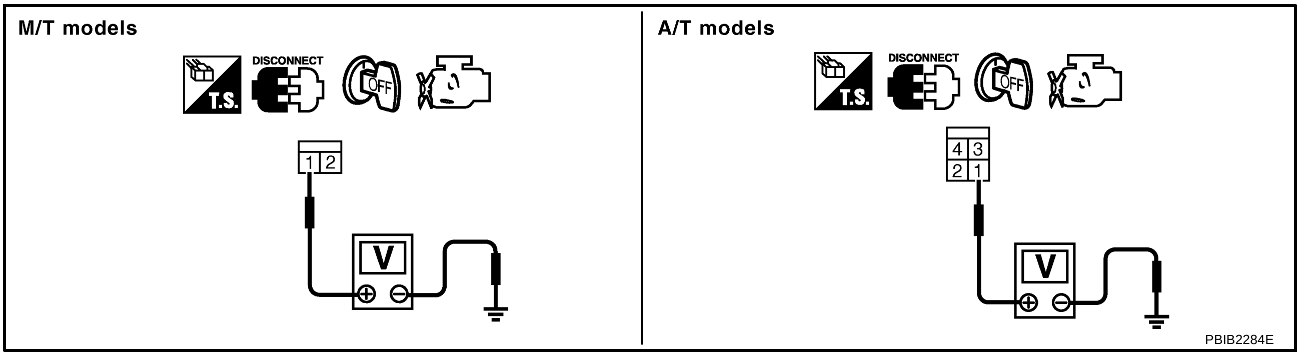

Voltage: Battery voltage

OK or NG

OK >> GO TO 14.
NG >> GO TO 13.

13. DETECT MALFUNCTIONING PART

Check the following.

- Fuse block (J/B) connector M2
- 10A fuse
- Harness for open or short between stop lamp switch and fuse

>> Repair open circuit or short to ground or short to power in harness or connectors.

14. CHECK STOP LAMP SWITCH INPUT SIGNAL CIRCUIT FOR OPEN AND SHORT

1. Disconnect ECM harness connector.
2. Check harness continuity between ECM terminal 101 and stop lamp switch terminal 2.
   Refer to Wiring Diagram.

   Continuity should exist.

3. Also check harness for short to ground and short to power.

OK or NG

OK >> GO TO 15.
NG >> Repair open circuit or short to ground or short to power in harness or connectors.

15. CHECK STOP LAMP SWITCH

Refer to EC-646, "Component Inspection"

OK or NG

OK >> GO TO 16.
NG >> Replace stop lamp switch.

16. CHECK INTERMITTENT INCIDENT

Refer to EC-153, "TROUBLE DIAGNOSIS FOR INTERMITTENT INCIDENT" .

>> **INSPECTION END**

Component Inspection

ABS00DB0

ASCD BRAKE SWITCH

1. Turn ignition switch OFF.
2. Disconnect ASCD brake switch harness connector.
3. Check continuity between ASCD brake switch terminals 1 and 2 under the following conditions.

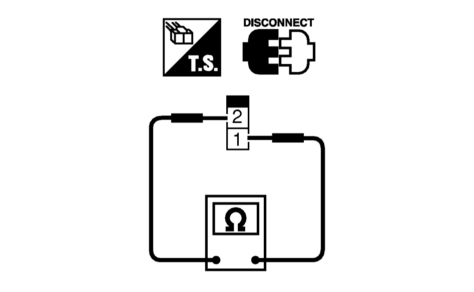

SEC023D

Condition	Continuity
Brake pedal: Fully released.	Should exist.
Brake pedal: Slightly depressed.	Should not exist.

If NG, adjust ASCD brake switch installation, refer to BR-6, "BRAKE PEDAL" , and perform step 3 again.

ASCD CLUTCH SWITCH

1. Turn ignition switch OFF.
2. Disconnect ASCD clutch switch harness connector.
3. Check continuity between ASCD clutch switch terminals 1 and 2 under the following conditions.

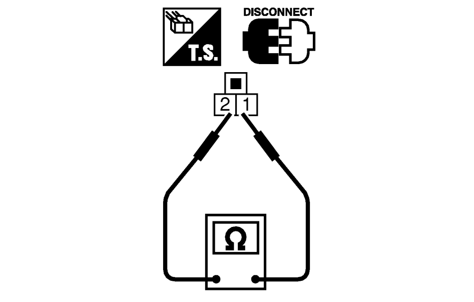

SEC024D

Condition	Continuity
Clutch pedal: Fully released.	Should exist.
Clutch pedal: Slightly depressed.	Should not exist.

If NG, adjust ASCD clutch switch installation, refer to CL-5, "CLUTCH PEDAL" , and perform step 3 again.

STOP LAMP SWITCH

1. Turn ignition switch OFF.
2. Disconnect stop lamp switch harness connector.

3. Check continuity between stop lamp switch terminals 1 and 2 under the following conditions.

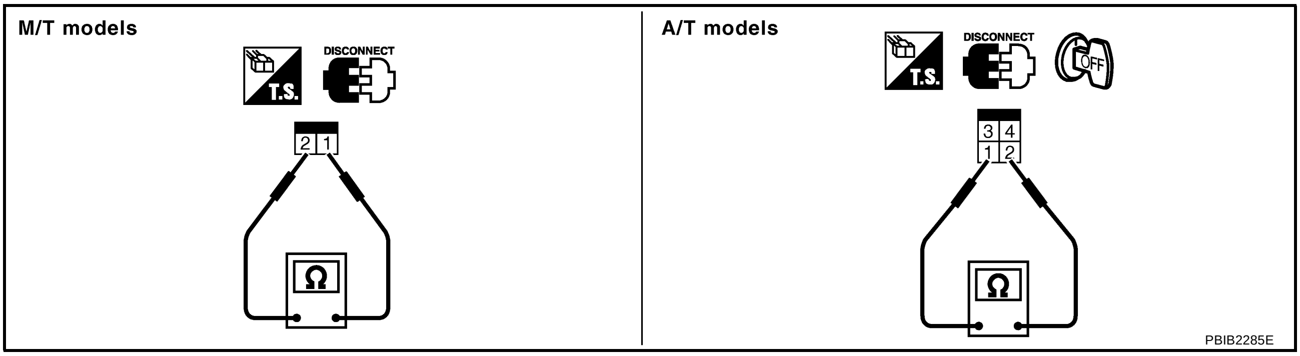

Condition	Continuity
Brake pedal: Fully released.	Should not exist.
Brake pedal: Slightly depressed.	Should exist.

If NG, adjust stop lamp switch installation, refer to BR-6, "BRAKE PEDAL" , and perform step 3 again.

ASCD INDICATOR

PFP:24814

Component Description

ABS00CZQ

ASCD indicator lamp illuminates to indicate ASCD operation status. Lamp has two indicators, CRUISE and SET, and is integrated in combination meter.
CRUISE indicator illuminates when MAIN (CRUISE) switch on ASCD steering switch is turned ON to indicated that ASCD system is ready for operation.
SET indicator illuminates when following conditions are met.

- CRUISE indicator is illuminated.
- SET/COAST switch on ASCD steering switch is turned ON while vehicle speed is within the range of ASCD setting.

SET indicator remains lit during ASCD control.
Refer to EC-27, "AUTOMATIC SPEED CONTROL DEVICE (ASCD)" for the ASCD function.

CONSULT-II Reference Value in Data Monitor Mode

ABS00CZR

Specification data are reference value.

MONITOR ITEM	CONDITION		SPECIFICATION
CRUISE LAMP	● Ignition switch: ON	MAIN (CRUISE) switch: Pressed at 1st time →2nd time	ON → OFF
SET LAMP	● CRUISE switch: ON ● When vehicle is between 40 km/h (25 MPH) and 144 km/h (89 MPH)	ASCD: Operating	ON
		ASCD: Not operating	OFF

Wiring Diagram
ABS00CZS

AWD

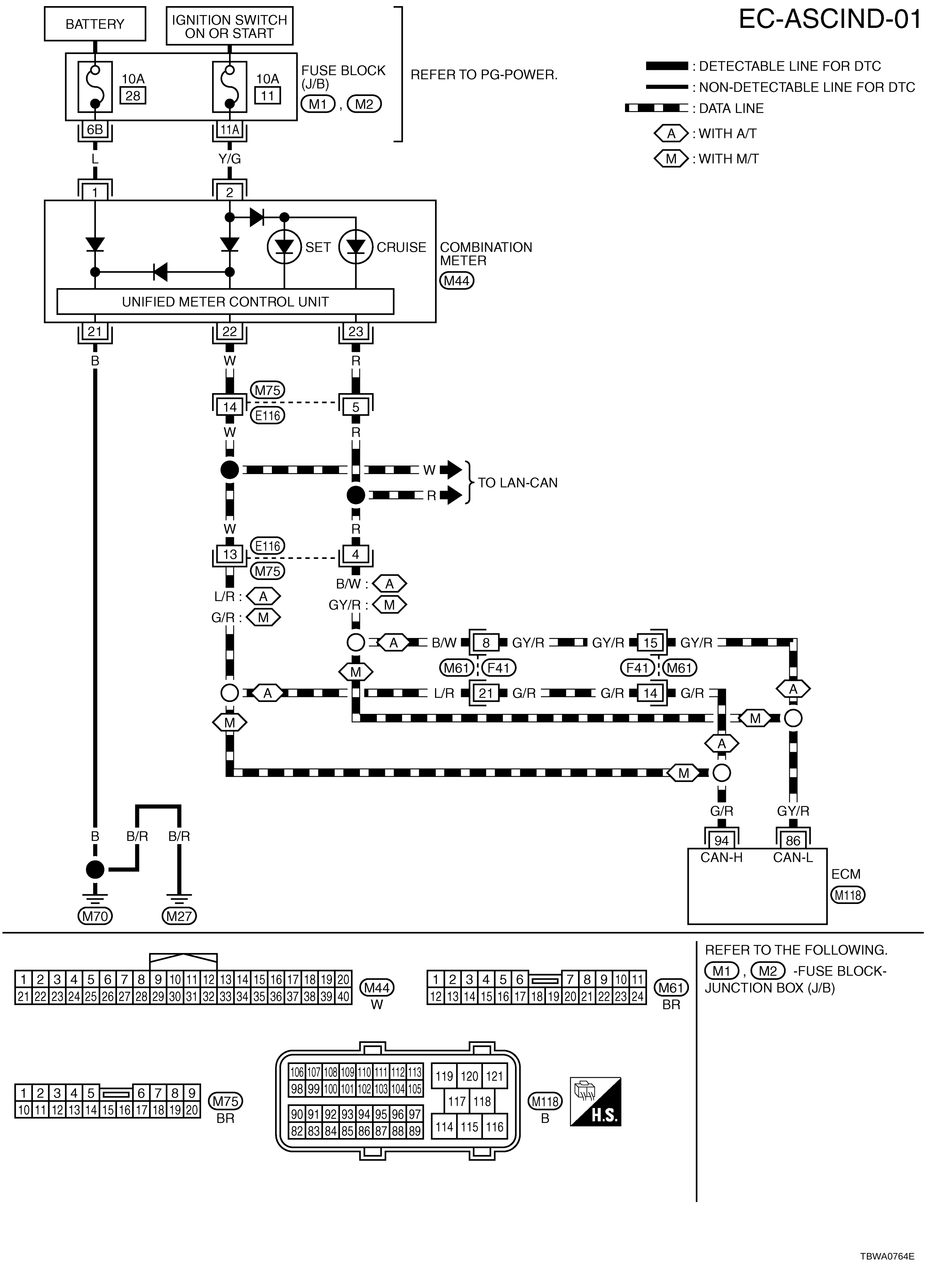

2WD

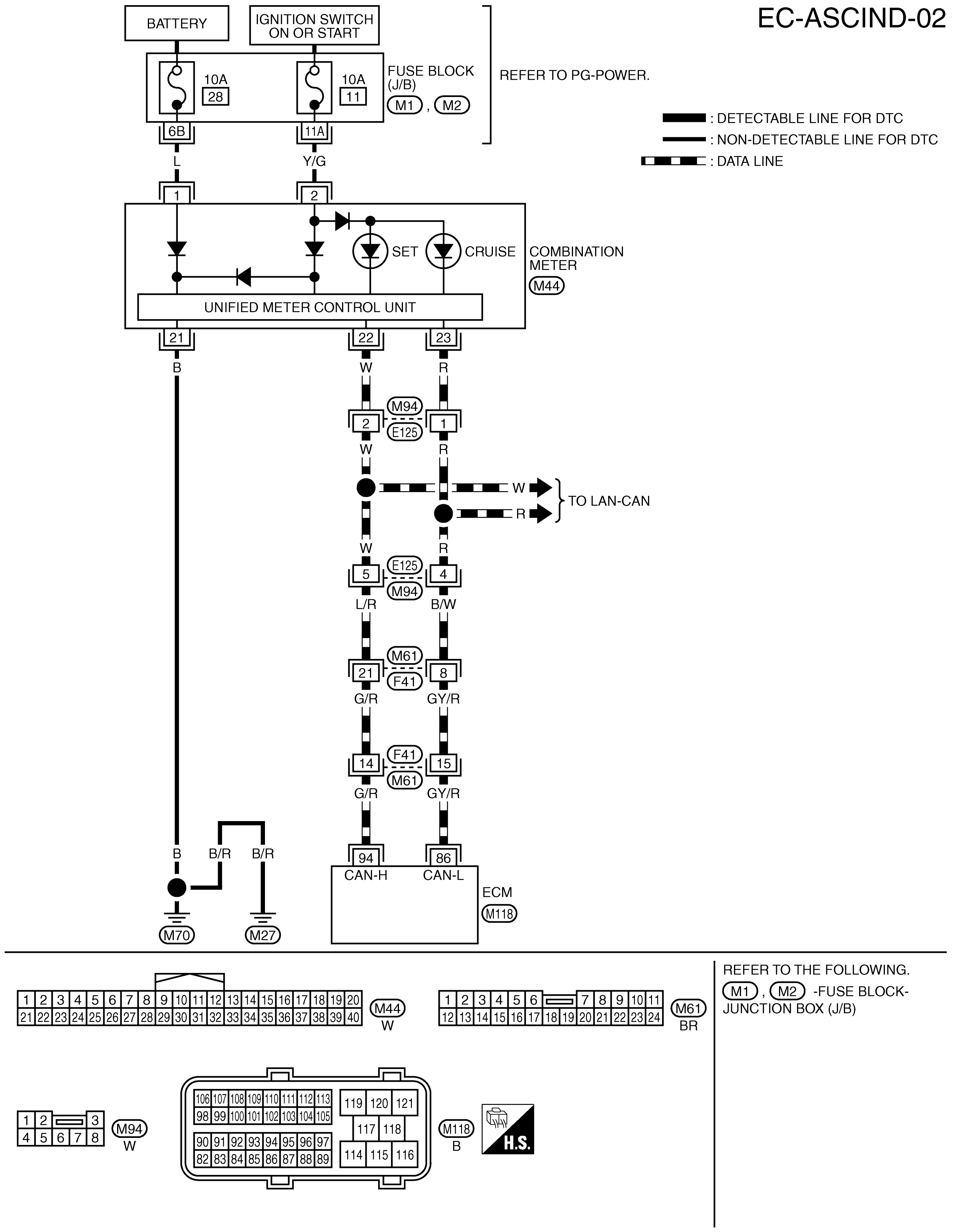
EC-ASCIND-02
BATTERY
IGNITION SWITCH ON OR START
10A 28
10A 11
FUSE BLOCK (J/B)
M1, M2
REFER TO PG-POWER.
: DETECTABLE LINE FOR DTC
: NON-DETECTABLE LINE FOR DTC
: DATA LINE
6B
11A
L
Y/G
SET
CRUISE
COMBINATION METER
M44
UNIFIED METER CONTROL UNIT
B
W
R
M94
E125
TO LAN-CAN
L/R
B/W
M61
F41
G/R
GY/R
B/R
CAN-H
CAN-L
ECM
M118
M70
M27
REFER TO THE FOLLOWING.
M1, M2 -FUSE BLOCK-JUNCTION BOX (J/B)
BR
H.S.
TBWA0765E

Diagnostic Procedure

ABS00CZT

A
EC
C
D
E
F
G
H
I
J
K
L
M

1. CHECK OVERALL FUNCTION

Check ASCD indicator under the following conditions.

ASCD INDICATOR	CONDITION		SPECIFICATION
CRUISE LAMP	● Ignition switch: ON	MAIN (CRUISE) switch: Pressed at 1st time → 2nd time	ON → OFF
SET LAMP	● CRUISE switch: ON ● When vehicle is between 40 km/h (25 MPH) and 144 km/h (89 MPH)	ASCD: Operating	ON
		ASCD: Not operating	OFF

OK or NG

OK >> **INSPECTION END**
NG >> GO TO 2.

2. CHECK DTC

Check that DTC U1000 or U1001is not displayed.

Yes or No

Yes >> Perform trouble diagnoses for DTC U1000, U1001, refer to EC-162, "DTC U1000, U1001 CAN COMMUNICATION LINE" .
No >> GO TO 3.

3. CHECK COMBINATION METER OPERATION

Does combination meter operate normally?

Yes or No

Yes >> GO TO 4.
No >> Check combination meter circuit. Refer to DI-4, "COMBINATION METERS" .

4. CHECK INTERMITTENT INCIDENT

Refer to EC-153, "TROUBLE DIAGNOSIS FOR INTERMITTENT INCIDENT" .

>> **INSPECTION END**

SNOW MODE SWITCH

PFP:25310

Description

ABS00D92

NOTE:

If DTC U1000 or U1001 are displayed, first perform the trouble diagnosis for DTC U1000, U1001.

Refer to EC-162, "DTC U1000, U1001 CAN COMMUNICATION LINE" .

The snow mode switch signal is sent to the combination meter from the snow mode switch. The combination meter then sends the signal to the ECM by CAN communication line.

The snow mode is used for driving or starting the vehicle on snowy roads or slippery areas. If the snow mode is activated, the vehicle speed will not be accelerated immediately than your original pedal in due to avoid the vehicle slip. In other words, ECM controls the rapid engine torque change by controlling the electric throttle control actuator operating speed.

CONSULT-II Reference Value in the Data Monitor Mode

ABS00D93

Specification data are reference values.

MONITOR ITEM	CONDITION		SPECIFICATION
SNOW MODE SW	● Ignition switch: ON	Snow mode switch: ON	ON
		Snow mode switch: OFF	OFF

Wiring Diagram

ABS00D94

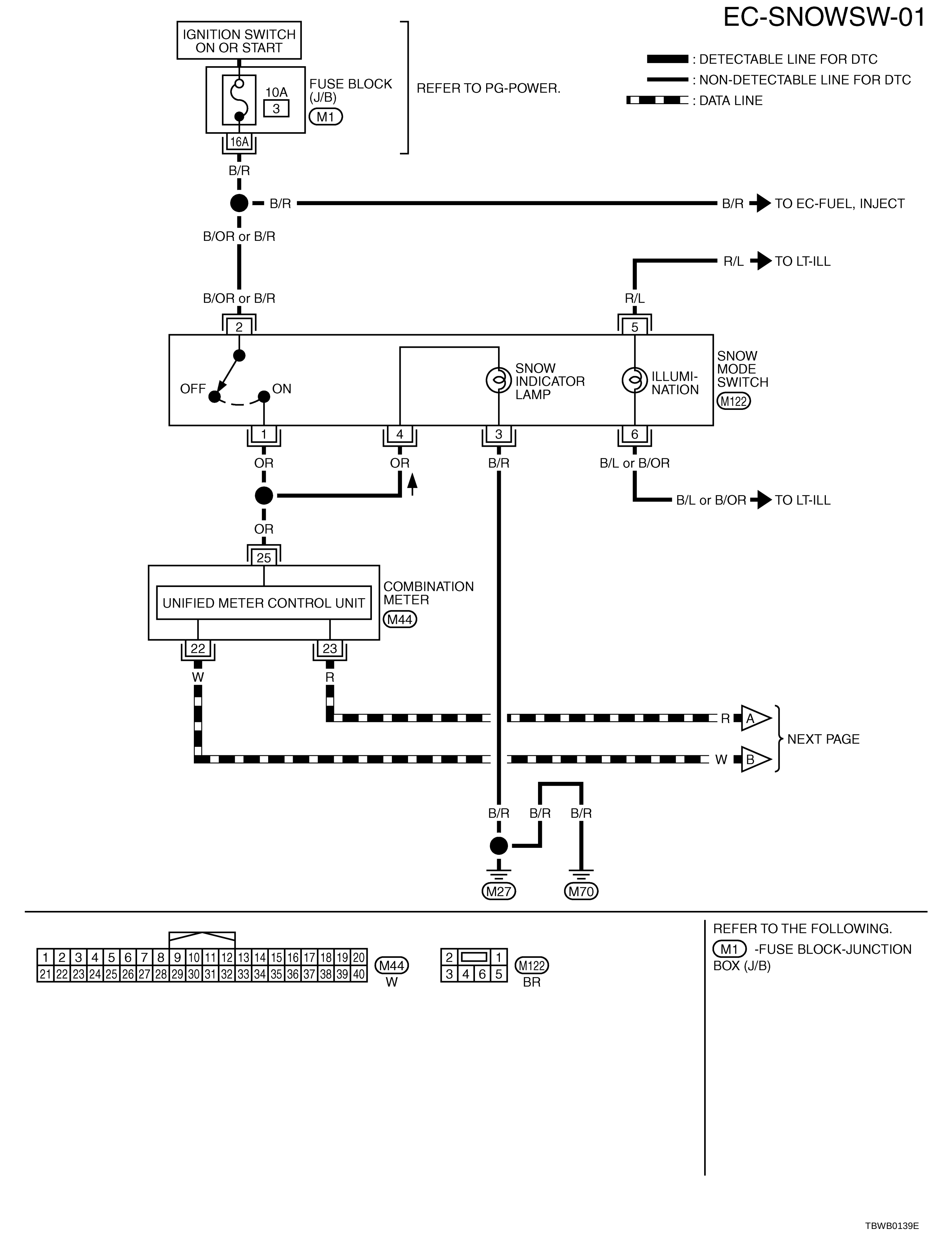

EC-SNOWSW-02

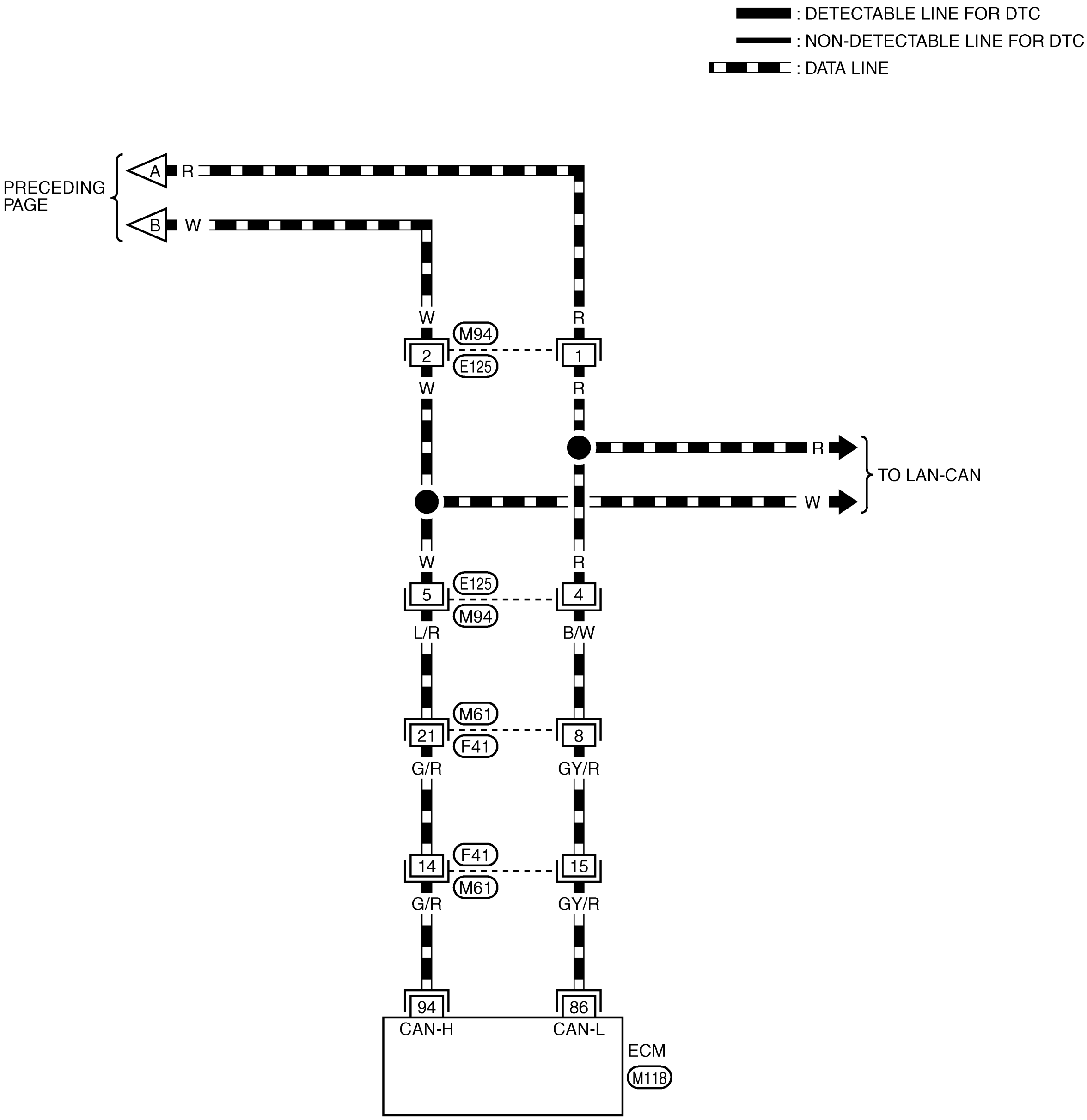

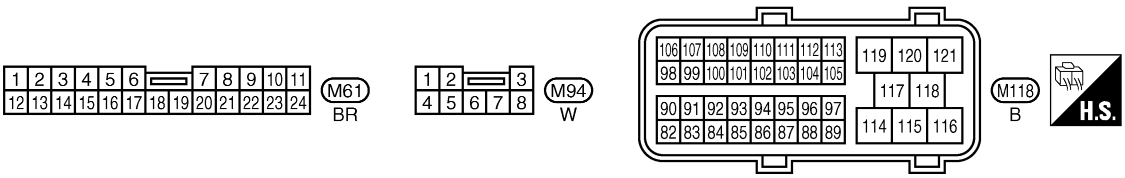

TBWB0140E

Diagnostic Procedure

ABS00D95

1. CHECK SNOW MODE SWITCH OVERALL FUNCTION- I

1. Turn ignition switch ON.
2. Select “SNOW MODE SW” in “DATA MONITOR” mode with CONSULT-II.
3. Check “SNOW MODE SW” indication under the following conditions.

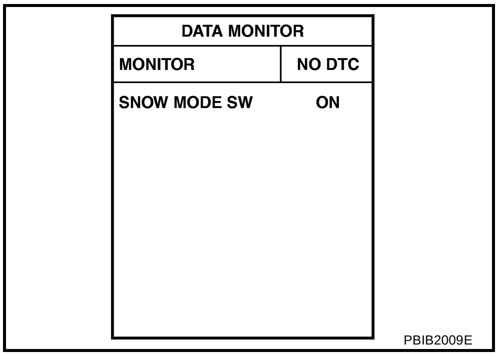

CONDITION	INDICATION
Snow mode switch: ON	ON
Snow mode switch: OFF	OFF

<u>OK or NG</u>

OK >> GO TO 2.
NG >> GO TO 3.

2. CHECK SNOW MODE SWITCH OVERALL FUNCTION- II

1. Start engine.
2. Check the snow mode indicator in the combination meter under the following condition.

CONDITION	INDICATION
Snow mode switch: ON	ON
Snow mode switch: OFF	OFF

<u>OK or NG</u>

OK >> **INSPECTION END**
NG >> GO TO 3.

3. CHECK GROUND CONNECTIONS

1. Turn ignition switch OFF.
2. Loosen and retighten three ground screws on the body.
   Refer to EC-161, "Ground Inspection" .

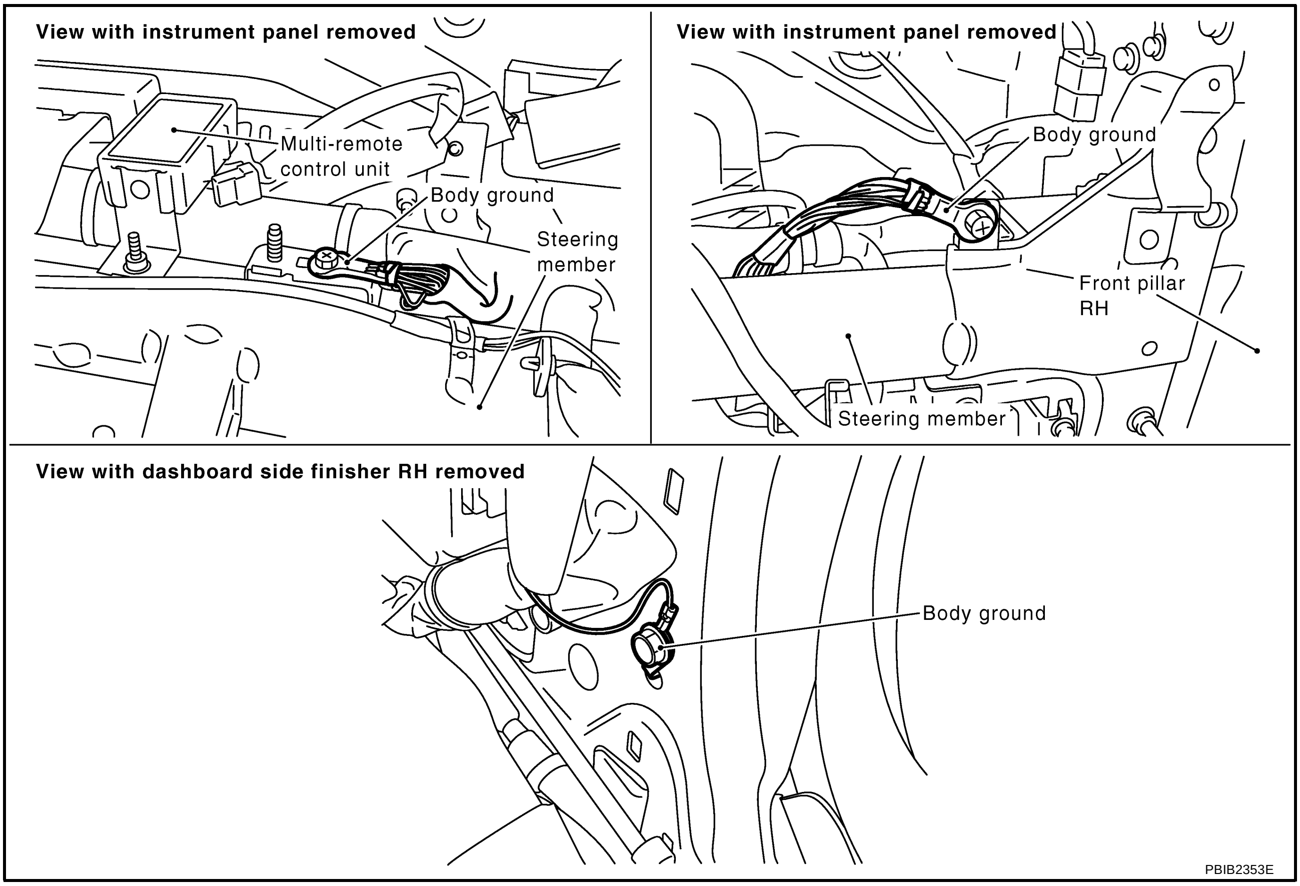

OK or NG

OK >> GO TO 4.
NG >> Repair or replace ground connections.

4. CHECK POWER SUPPLY CIRCUIT-I

1. Disconnect combination meter harness connector.
2. Turn ignition switch ON.
3. Check voltage between combination meter terminal 25 and ground under the following conditions with CONSULT-II or tester.

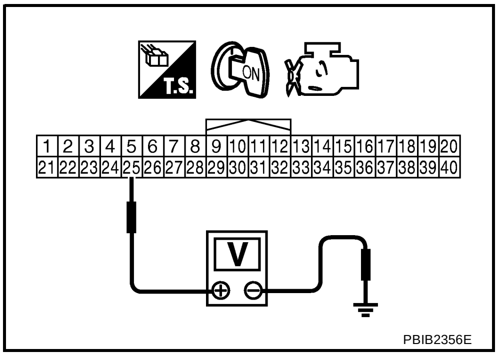

CONDITION	VOLTAGE
Snow mode switch: ON	Battery voltage
Snow mode switch: OFF	0V

OK or NG

OK >> GO TO 8.
NG >> GO TO 5.

A
EC
C
D
E
F
G
H
I
J
K
L
M

5. CHECK POWER SUPPLY CIRCUIT-II

1. Turn ignition switch OFF.
2. Disconnect snow mode switch.
3. Turn ignition switch ON.
4. Check voltage between snow mode switch terminal 2 and ground with CONSULT-II or tester.

Voltage: Battery voltage.

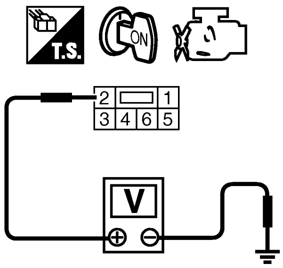

PBIB2357E

OK or NG

OK >> GO TO 7.
NG >> GO TO 6.

6. DETECT MALFUNCTIONING PART

Check the following.

- 10A fuse
- Fuse block (J/B) M1
- Harness for open or short between snow mode switch and fuse.

>> Repair open circuit or short to ground or short to power in harness or connectors.

7. CHECK SNOW MODE SWITCH OUT PUT SIGNAL CIRCUIT FOR OPEN AND SHORT

1. Turn ignition switch OFF.
2. Check harness continuity between snow mode switch terminal 1 and combination meter terminal 25. Refer to Wiring Diagram.

Continuity should exist.

3. Also check harness for short to ground and short to power.

OK or NG

OK >> GO TO 8.
NG >> Repair open circuit or short to ground or short to power in harness or connectors.

8. CHECK SNOW MODE INDICATOR LAMP INPUT SIGNAL CIRCUIT FOR OPEN AND SHORT

1. Turn ignition switch OFF.
2. Disconnect snow mode switch harness connector.
3. Check harness continuity between snow mode switch terminal 4 and combination meter terminal 25. Refer to Wiring Diagram.

Continuity should exist.

4. Also check harness for short to ground and short to power.

OK or NG

OK >> GO TO 9.
NG >> Repair open circuit or short to ground or short to power in harness or connectors.

9. CHECK SNOW MODE INDICATOR LAMP GROUND CIRCUIT FOR OPEN AND SHORT

1. Check harness continuity between snow mode switch terminal 3 and ground.
   Refer to Wiring Diagram.

   Continuity should exist.

2. Also check harness for short to power.

OK or NG

OK >> GO TO 10.
NG >> Repair open circuit or short to power in harness or connectors.

10. CHECK SNOW MODE INDICATOR LAMP

1. Check harness continuity between snow mode switch terminals 3 and 4.
   Refer to Wiring Diagram.

   Continuity should exist.

2. Also check harness for short to ground or short to power.

OK or NG

OK >> GO TO 11.
NG >> Replace snow mode switch.

11. CHECK SNOW MODE SWITCH

Refer to EC-658, "Component Inspection" .

OK or NG

OK >> GO TO 12.
NG >> Replace snow mode switch.

12. CHECK COMBINATION METER

Refer to DI-4, "COMBINATION METERS" .

OK or NG

OK >> GO TO 13.
NG >> Replace combination meter.

13. CHECK INTERMITTENT INCIDENT

Refer to EC-153, "TROUBLE DIAGNOSIS FOR INTERMITTENT INCIDENT" .

>> **INSPECTION END**

Component Inspection

ABS00D96

SNOW MODE SWITCH

1. Check snow mode switch continuity between terminals 1 and 2 under the following condition.

CONDITION	CONTINUITY
Snow mode switch: ON	Should exist
Snow mode switch: OFF	Should not exist

2. If NG, replace snow mode switch.

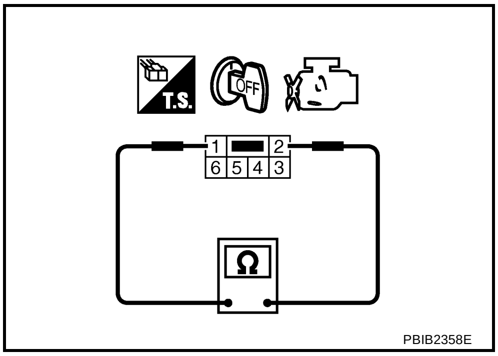

PBIB2358E

MIL AND DATA LINK CONNECTOR

PFP:24814

Wiring Diagram

ABS00CZU

AWD

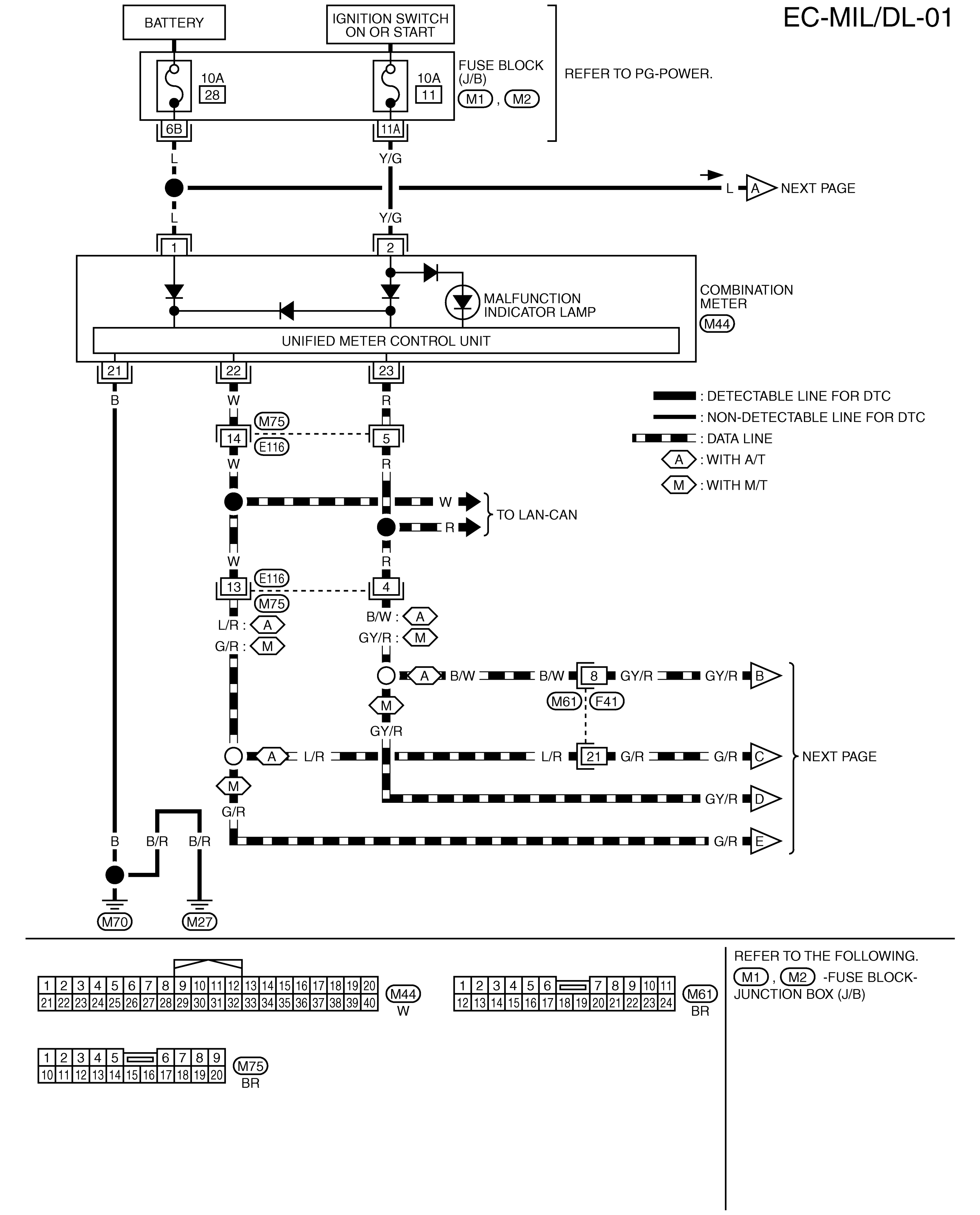

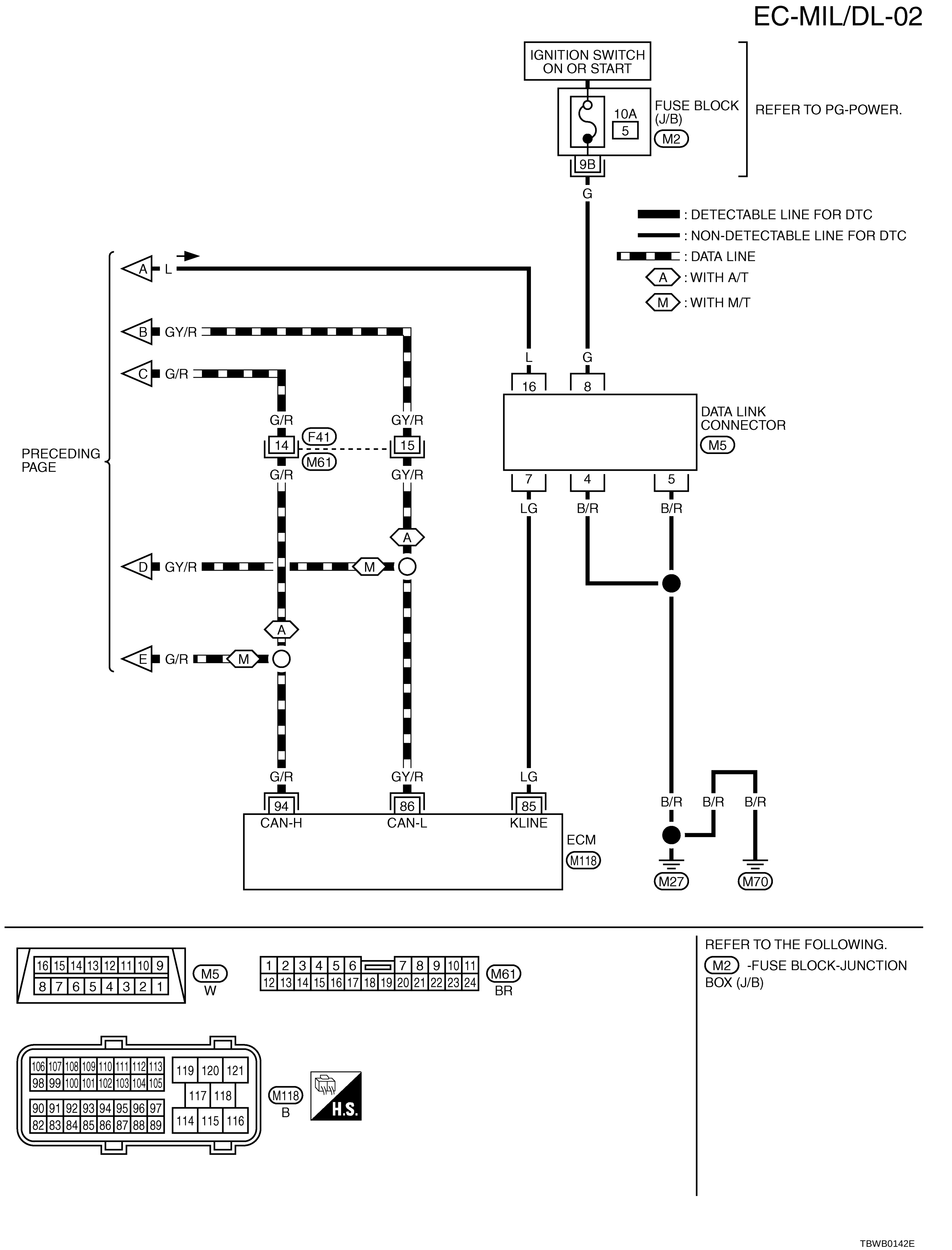
EC-MIL/DL-02
IGNITION SWITCH ON OR START
10A
5
FUSE BLOCK (J/B)
M2
REFER TO PG-POWER.
9B
G
: DETECTABLE LINE FOR DTC
: NON-DETECTABLE LINE FOR DTC
: DATA LINE
A : WITH A/T
M : WITH M/T
A L
B GY/R
C G/R
D GY/R
E G/R
PRECEDING PAGE
G/R
GY/R
14
15
F41
M61
16
8
DATA LINK CONNECTOR
M5
7
4
5
LG
B/R
94
86
85
CAN-H
CAN-L
KLINE
ECM
M118
M27
M70
REFER TO THE FOLLOWING.
M2 -FUSE BLOCK-JUNCTION BOX (J/B)
M5
W
M61
BR
M118
B
H.S.
TBWB0142E

2WD

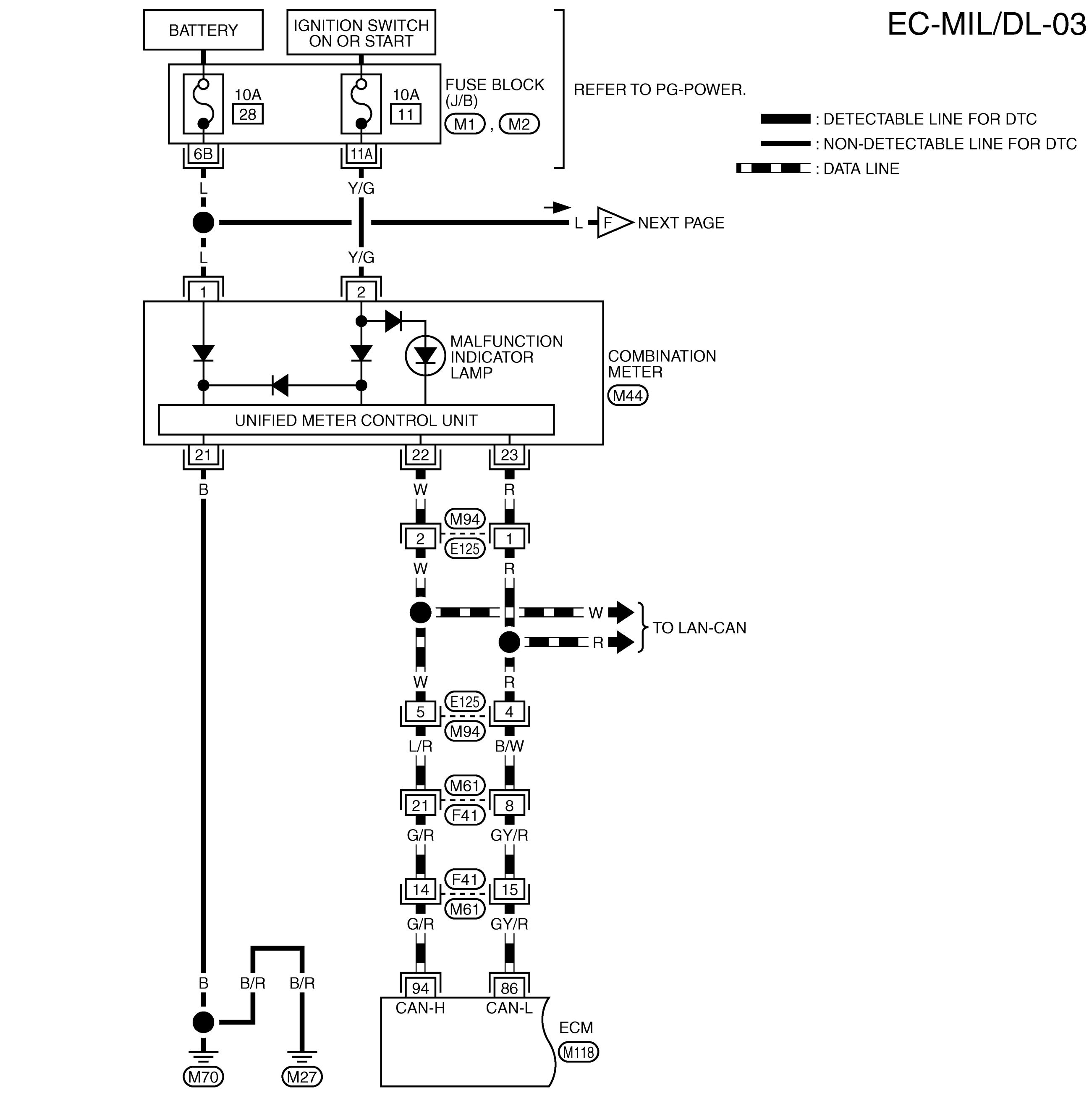

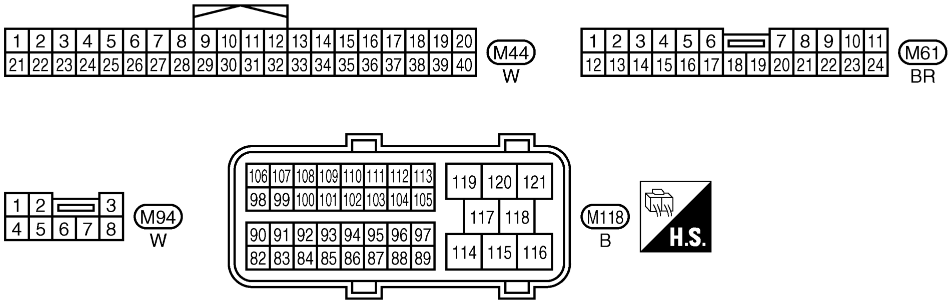

REFER TO THE FOLLOWING.
M1 , M2 -FUSE BLOCK-JUNCTION BOX (J/B)

TBWB0143E

EC-MIL/DL-04

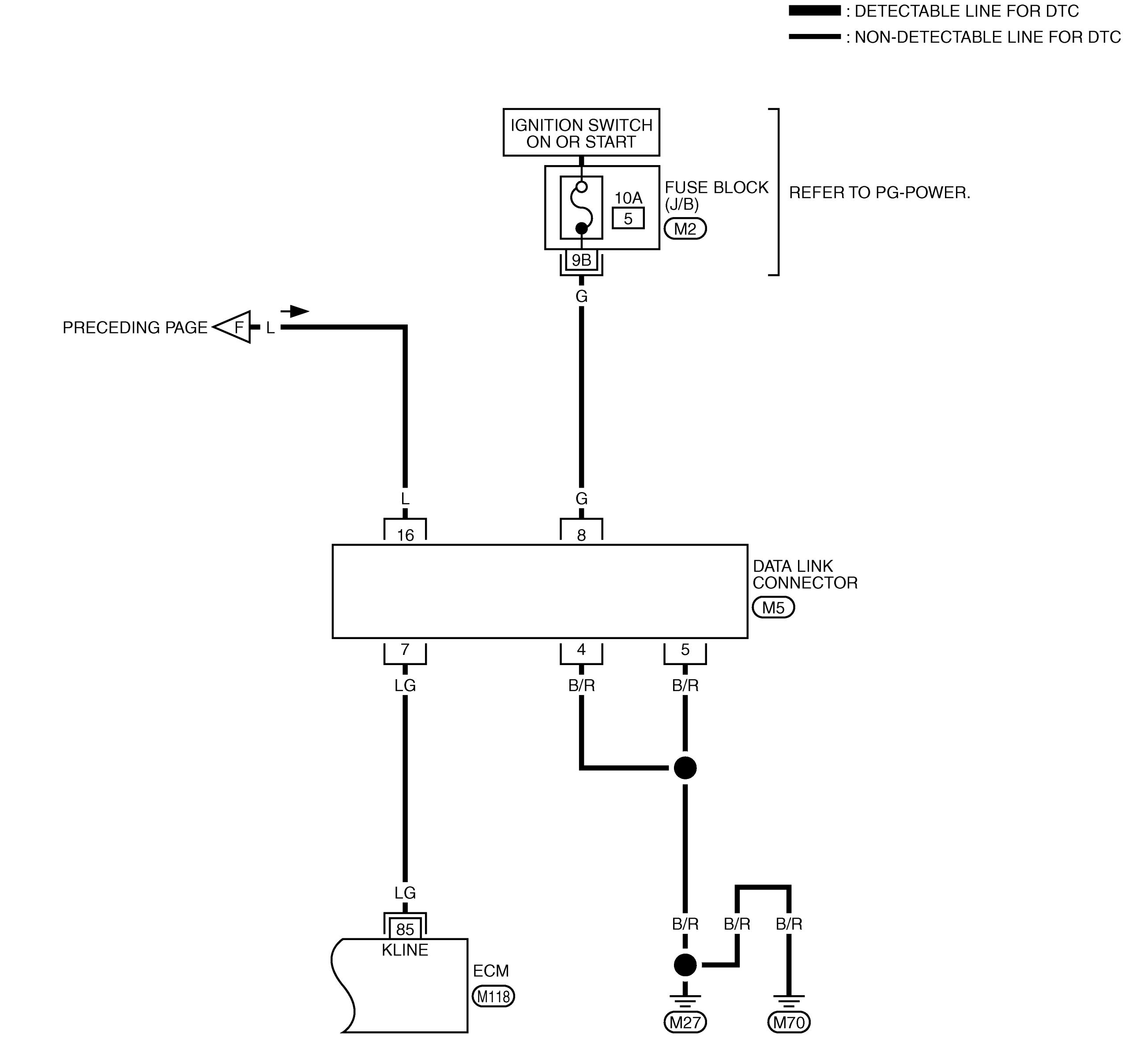

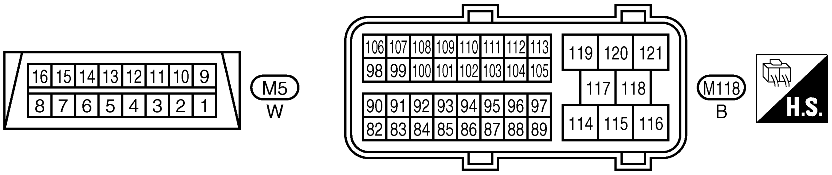

REFER TO THE FOLLOWING.
M2 -FUSE BLOCK-JUNCTION BOX (J/B)

TBWB0144E

SERVICE DATA AND SPECIFICATIONS (SDS)

PFP:00030

A

Fuel Pressure

ABS00D06

Fuel pressure at idle	Approximately 350 kPa (3.57kg/cm^2 , 51psi)

EC

Idle Speed and Ignition Timing

ABS00D07

Target idle speed	No-load*1 [in P or N position (A/T) or Neutral position (M/T)]	700±50 rpm
Air conditioner: ON	In P or N position (A/T) or Neutral position (M/T)	800 rpm or more*2
Ignition timing	In P or N position (A/T) or Neutral position (M/T)	15°±5° BTDC

*1: Under the following conditions:

- Air conditioner switch: OFF
- Electric load: OFF (Lights, heater fan & rear window defogger)
- Steering wheel: Kept in straight-ahead position

*2: It refrigerant pressure is low, the idle speed may not be increased.

Calculated Load Value

ABS00D08

Conditions	Calculated load value% (Using CONSULT-II or GST)
At idle	10 - 35
At 2,500 rpm	10 - 35

Mass Air Flow Sensor

ABS00D09

Supply voltage	Battery voltage (11 - 14V)
Output voltage at idle	0.9 - 1.1*V
Mass air flow (Using CONSULT-II or GST)	1.0 - 4.0 g·m/sec at idle* 4.0 - 10.0 g·m/sec at 2,500 rpm*

*: Engine is warmed up to normal operating temperature and running under no-load.

Intake Air Temperature Sensor

ABS00D0A

Temperature °C (°F)	Resistance kΩ
25 (77)	1.94 - 2.06
80 (176)	0.295 - 0.349

Engine Coolant Temperature Sensor

ABS00D0B

Temperature °C (°F)	Resistance kΩ
20 (68)	2.1 - 2.9
50 (122)	0.68 - 1.00
90 (194)	0.236 - 0.260

Heated Oxygen Sensor 1 Heater

ABS00D0C

Resistance [at 25°C (77°F)]Ω	3.3 - 4.0

Heated Oxygen Sensor 2 Heater

ABS00D0D

Resistance [at 25°C (77°F)]	5.0 - 7.0Ω

Crankshaft Position Sensor (POS)

ABS00D0F

Refer to EC-316, "Component Inspection" .

Camshaft Position Sensor (PHASE)

ABS00D0G

Refer to EC-324, "Component Inspection" .

C D E F G H I J K L M

Throttle Control Motor

ABS00D0H

Resistance [at 25°C (77°F)]	Approximately 1 - 15Ω

Injector

ABS00D0I

Resistance [at 10 - 60°C (50 - 140°F)]	13.5 - 17.5Ω

Fuel Pump

ABS00D0J

Resistance [at 25°C (77°F)]	Approximately 0.2 - 5.0Ω